TS3USB3000 DPDT USB 2.0 High-Speed and Mobile High-Definition Link (MHL) 6.1-GHz Switch

1 Features

- V_{CC} Range 2.3 V to 4.8 V
- Mobile Hi-Definition Link (MHL) Switch:
  - Bandwidth (–3 dB): 6.1 GHz
  - R_{ON} (Typical): 5.7 Ω
  - C_{ON} (Typical): 1.6 pF
- USB Switch:
  - Bandwidth (–3 dB): 6.1 GHz
  - R_{ON} (Typical): 4.6 Ω
  - C_{ON} (Typical): 1.4 pF
- Current Consumption: 30 µA (Typical)
- Special Features:
  - I_{OFF} Protection Prevents Current Leakage in Powered-Down State (V_{CC} and V_{BUS} = 0 V)
  - 1.8-V Compatible Control Inputs (SEL, $\overline{OE}$)
  - Overvoltage Tolerance (OVT) on all I/O Pins up to 5.5 V Without External Components
  - Overvoltage Protection When 9-V Short to D+/-Pin
- ESD Performance:
  - 3.5-kV Human Body Model (A114B, Class II)
  - 1-kV Charged-Device Model (C101)
- 10-Pin UQFN Package (1.5-mm × 2-mm, 0.5-mm Pitch)

2 Applications

- Smartphones, Tablets, Mobile
- Portable Instrumentation
- Digital Still Cameras

3 Description

The TS3USB3000 device is a double-pole, double throw (DPDT) multiplexer that includes a high-speed Mobile High-Definition Link (MHL) switch and an USB 2.0 High-Speed (480 Mbps) switch in the same package. These configurations allow the system designer to use a common USB or Micro-USB connector for both MHL video signals and USB data.

The TS3USB3000 has a V_{CC} range of 2.3 V to 4.8 V and supports overvoltage tolerance (OVT) feature, which allows the I/O pins to withstand overvoltage conditions (up to 5.5 V). The power-off protection feature forces all I/O pins to be in high-impedance mode when power is not present, allowing full isolation of the signal lines under such condition without excessive leakage current. The select pins of TS3USB3000 are compatible with 1.8-V control voltage, allowing them to be directly interfaced with the General-Purpose I/O (GPIO) from a mobile processor.

The TS3USB3000 comes with a small 10-pin UQFN package with only 1.5 mm × 2 mm in size, which makes it a perfect candidate to be used in mobile applications.

Device Information (1)

PART NUMBER	PACKAGE	BODY SIZE (NOM)
TS3USB3000	UQFN (10)	1.50 mm × 2.00 mm

(1) For all available packages, see the orderable addendum at the end of the data sheet.

Functional Block Diagram

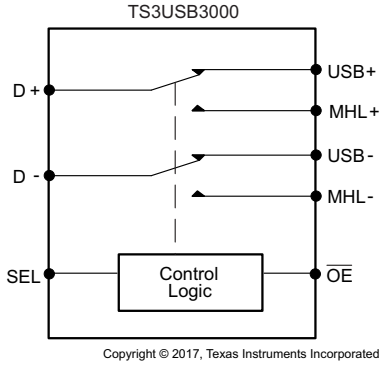

An IMPORTANT NOTICE at the end of this data sheet addresses availability, warranty, changes, use in safety-critical applications, intellectual property matters and other important disclaimers. PRODUCTION DATA.

Table of Contents

1 **Features** ... 1
2 **Applications** ... 1
3 **Description** ... 1
4 **Revision History** ... 2
5 **Pin Configuration and Functions** ... 4
6 **Specifications** ... 5
6.1 Absolute Maximum Ratings ... 5
6.2 ESD Ratings ... 5
6.3 Recommended Operating Conditions ... 5
6.4 Thermal Information ... 6
6.5 Electrical Characteristics ... 6
6.6 Dynamic Characteristics ... 7
6.7 Timing Requirements ... 7
6.8 Typical Characteristics ... 8
7 **Parameter Measurement Information** ... 10
8 **Detailed Description** ... 11
8.1 Overview ... 11
8.2 Functional Block Diagram ... 11
8.3 Feature Description ... 11
8.4 Device Functional Modes ... 13
9 **Application and Implementation** ... 14
9.1 Application Information ... 14
9.2 Typical Application ... 14
10 **Power Supply Recommendations** ... 18
11 **Layout** ... 18
11.1 Layout Guidelines ... 18
11.2 Layout Example ... 19
12 **Device and Documentation Support** ... 20
12.1 Documentation Support ... 20
12.2 Receiving Notification of Documentation Updates 20
12.3 Community Resources ... 20
12.4 Trademarks ... 20
12.5 Electrostatic Discharge Caution ... 20
12.6 Glossary ... 20
13 **Mechanical, Packaging, and Orderable Information** ... 20
13.1 Package Option Addendum ... 21

4 Revision History

Changes from Revision E (July 2018) to Revision F	Page
• Removed the duplicate Tape and Reel Information	20

Changes from Revision D (November 2017) to Revision E	Page
• Changed *Feature* From: Overvoltage Protection When 9-V Short to D-Pin To: Overvoltage Protection When 9-V Short to D+/-Pin	1
• Changed From: V_{D-}, D– DC voltage To: $V_{D+/–}$, D+/- DC voltage in the *Absolute Maximum Ratings*	5
• Changed Note (4) From: This rating only applies to the D– pin with respect to GND. To: This rating only applies to the D+/– pins with respect to GND in the *Absolute Maximum Ratings*	5
• Changed D- To: D+/- in *Overvoltage Protection When 9-V Short to D+/– Pin*	11
• Changed D- To: D+/- in *Pin Leakage*	13

Changes from Revision C (January 2017) to Revision D	Page
• Changed the *Package Option Addendum* Device Marking column	20

Changes from Revision B (October 2015) to Revision C	Page
• Extended the IC recommended V_{CC} operating range to V_{CC} = 2.3 to 4.8 V in the *Features*, *Description*, *Absolute Maximum Ratings*, *Recommended Operating Conditions*, *Electrical Characteristics*, *Dynamic Characteristics* and *Timing Requirements* sections	6

Changes from Revision A (April 2013) to Revision B	Page
• Added *Pin Configuration and Functions* section, *ESD Ratings* table, *Feature Description* section, *Device Functional Modes*, *Application and Implementation* section, *Power Supply Recommendations* section, *Layout* section, *Device and Documentation Support* section, and *Mechanical, Packaging, and Orderable Information* section	1

Copyright © 2012–2019, Texas Instruments Incorporated

Changes from Original (December 2012) to Revision A **Page**

- Updated TI data sheet – no specific changes. 1

5 Pin Configuration and Functions

RSE Package
10-Pin UQFN
Top View

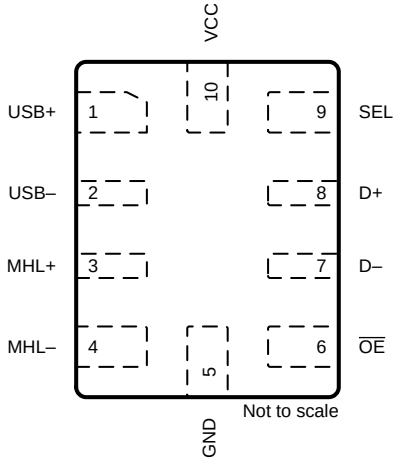

Pin Functions

PIN		I/O	DESCRIPTION
NO.	NAME		
1	USB+	I/O	USB data (Differential +)
2	USB–	I/O	USB data (Differential –)
3	MHL+	I/O	MHL data (Differential +)
4	MHL–	I/O	MHL data (Differential –)
5	GND	—	Ground
6	$\overline{OE}$	I	Output enable (Active low)
7	D–	I/O	Data switch output (Differential –)
8	D+	I/O	Data switch output (Differential +)
9	SEL	I	Switch select (logic Low = D+/D– to USB+/USB– Logic High = D+/D– to MHL+/MHL–)
10	VCC	—	Supply voltage

Copyright © 2012–2019, Texas Instruments Incorporated

6 Specifications

6.1 Absolute Maximum Ratings

over operating free-air temperature range (unless otherwise noted)[1] [2]

			MIN	MAX	UNIT
V_{CC}	Supply voltage[3]		–0.3	5.5	V
$V_{I/O}$	Input-output DC voltage[3]		–0.3	5.5	V
$V_{D+/-}$	D+/- DC voltage[4]		–0.3	9	V
V_I	Digital input voltage (SEL, $\overline{OE}$)		–0.3	5.5	V
I_K	Input-output port diode current	$V_{I/O} < 0$	–50		mA
I_{IK}	Digital logic input clamp current[3]	$V_I < 0$	–50		mA
I_{CC}	Continuous current through VCC			100	mA
I_{GND}	Continuous current through GND		–100		mA
T_{stg}	Storage temperature		–65	150	°C

(1) Stresses beyond those listed under *Absolute Maximum Ratings* may cause permanent damage to the device. These are stress ratings only, which do not imply functional operation of the device at these or any other conditions beyond those indicated under *Recommended Operating Conditions*. Exposure to absolute-maximum-rated conditions for extended periods may affect device reliability.
(2) The algebraic convention, whereby the most negative value is a minimum and the most positive value is a maximum.
(3) All voltages are with respect to ground, unless otherwise specified.
(4) This rating only applies to the D+/– pins with respect to GND. VCC must be powered within the recommended operating conditions of 2.3 V to 4.8 V and the $\overline{OE}$ pin must be logic high for this rating to be applicable. Any condition where VCC is unpowered or the $\overline{OE}$ pin is not high must reference the rest of the *Absolute Maximum Ratings* Table.

6.2 ESD Ratings

			VALUE	UNIT
$V_{(ESD)}$	Electrostatic discharge	Human body model (HBM), per ANSI/ESDA/JEDEC JS-001[1]	±3500	V
		Charged-device model (CDM), per JEDEC specification JESD22-C101[2]	±1000	

(1) JEDEC document JEP155 states that 500-V HBM allows safe manufacturing with a standard ESD control process.
(2) JEDEC document JEP157 states that 250-V CDM allows safe manufacturing with a standard ESD control process.

6.3 Recommended Operating Conditions

		MIN	MAX	UNIT
V_{CC}	Supply voltage	2.3	4.8	V
$V_{I/O\ (USB)}$	Analog voltage	0	3.6	V
$V_{I/O\ (MHL)}$				
V_I	Digital input voltage (SEL, $\overline{OE}$)	0	V_{CC}	V
T_{RAMP} (V_{CC})	Power supply ramp time requirement (V_{CC})	100	1000	µs/V
T_A	Operating free-air temperature	–40	85	ºC

6.4 Thermal Information

THERMAL METRIC [1]		TS3USB3000 RSE (UQFN) 10 PINS	UNIT
$R_{\theta JA}$	Junction-to-ambient thermal resistance	191.6	°C/W
$R_{\theta JC(top)}$	Junction-to-case (top) thermal resistance	94.3	°C/W
$R_{\theta JB}$	Junction-to-board thermal resistance	117.5	°C/W
ψ_{JT}	Junction-to-top characterization parameter	7.4	°C/W
ψ_{JB}	Junction-to-board characterization parameter	117.4	°C/W

(1) For more information about traditional and new thermal metrics, see the *Semiconductor and IC Package Thermal Metrics* application report.

6.5 Electrical Characteristics

T_A = –40°C to +85°C, Typical values are at V_{CC} = 3.3 V, T_A = 25°C, (unless otherwise noted)

PARAMETER		TEST CONDITIONS		MIN	TYP	MAX	UNIT
MHL SWITCH							
R_{ON}	ON-state resistance	V_{CC} = 2.7 V	$V_{I/O}$ = 1.65 V, I_{ON} = –8 mA		5.7	9	Ω
		V_{CC} = 2.3 V	$V_{I/O}$ = 1.65 V, I_{ON} = –8 mA		5.7	9.5	
ΔR_{ON}	ON-state resistance match between + and – paths	V_{CC} = 2.3 V	$V_{I/O}$ = 1.65 V, I_{ON} = –8 mA		0.1		Ω
$R_{ON(FLAT)}$	ON-state resistance flatness	V_{CC} = 2.3 V	$V_{I/O}$ = 1.65 V to 3.45 V, I_{ON} = –8 mA		1		Ω
I_{OZ}	OFF leakage current	V_{CC} = 4.8 V	Switch OFF, $V_{MHL\pm}$ = 1.65 V to 3.45 V, $V_{D\pm}$ = 0 V	–2		2	µA
I_{OFF}	Power-off leakage current	V_{CC} = 0 V	Switch ON or OFF, $V_{MHL\pm}$ = 1.65 V to 3.45 V, $V_{D\pm}$ = NC	–10		10	µA
I_{ON}	ON leakage current	V_{CC} = 4.8 V	Switch ON, $V_{MHL\pm}$ = 1.65 V to 3.45 V, $V_{D\pm}$ = NC	–2		2	µA
		V_{CC} = 2.3 V	Switch ON, $V_{MHL\pm}$ = 1.65 V to 3.45 V, $V_{D\pm}$ = NC	–125		125	
USB SWITCH							
R_{ON}	ON-state resistance	V_{CC} = 2.3 V	$V_{I/O}$ = 0.4 V, I_{ON} = –8 mA		4.6	7.5	Ω
ΔR_{ON}	ON-state resistance match between + and – paths	V_{CC} = 2.3 V	$V_{I/O}$ = 0.4 V, I_{ON} = –8 mA		0.1		Ω
$R_{ON(FLAT)}$	ON-state resistance flatness	V_{CC} = 2.3 V	$V_{I/O}$ = 0 V to 0.4 V, I_{ON} = –8 mA		1		Ω
I_{OZ}	OFF leakage current	V_{CC} = 4.8 V	Switch OFF, $V_{USB\pm}$ = 0 V to 3.6 V, $V_{D\pm}$ = 0 V	–2		2	µA
I_{OFF}	Power-off leakage current	V_{CC} = 0 V	Switch ON or OFF, $V_{USB\pm}$ = 0 V to 3.6 V, $V_{D\pm}$ = NC	–10		10	µA
I_{ON}	ON leakage current	V_{CC} = 4.8 V	Switch ON, $V_{USB\pm}$ = 0 V to 3.6 V, $V_{D\pm}$ = NC	–2		2	µA
		V_{CC} = 2.3 V	Switch ON, $V_{USB\pm}$ = 0 V to 3.6 V, $V_{D\pm}$ = NC	–125		125	
DIGITAL CONTROL INPUTS (SEL, $\overline{OE}$)							
V_{IH}	Input logic high	V_{CC} = 2.3 V to 4.8 V		1.3			V
V_{IL}	Input logic low	V_{CC} = 2.3 V to 4.8 V				0.6	V
I_{IN}	Input leakage current	V_{CC} = 4.8 V, $V_{I/O}$ = 0 V to 3.6 V, V_{IN} = 0 to 4.8 V		–10		10	µA

Copyright © 2012–2019, Texas Instruments Incorporated

6.6 Dynamic Characteristics

over operating free-air temperature range (unless otherwise noted)

PARAMETER		TEST CONDITIONS		MIN	TYP	MAX	UNIT
$C_{ON(MHL)}$	MHL path ON capacitance	V_{CC} = 3.3 V, $V_{I/O}$ = 0 or 3.3 V, f = 240 MHz	Switch ON		1.6	2	pF
$C_{ON(USB)}$	USB path ON capacitance	V_{CC} = 3.3 V, $V_{I/O}$ = 0 or 3.3 V, f = 240 MHz	Switch ON		1.4	2	pF
$C_{OFF(MHL)}$	MHL path OFF capacitance	V_{CC} = 3.3 V, $V_{I/O}$ = 0 or 3.3 V f = 240 MHz	Switch OFF		1.4	2	pF
$C_{OFF(USB)}$	USB path OFF capacitance	V_{CC} = 3.3 V, $V_{I/O}$ = 0 or 3.3 V f = 240 MHz	Switch OFF		1.6	2	pF
C_I	Digital input capacitance	V_{CC} = 3.3 V, V_I = 0 or 2 V			2.2		pF
O_{ISO}	OFF Isolation	V_{CC} = 2.3 V to 4.8 V, R_L = 50 Ω, f = 240 MHz	Switch OFF		–34		dB
X_{TALK}	Crosstalk	V_{CC} = 2.3 V to 4.8 V, R_L = 50 Ω, f = 240 MHz	Switch ON		–37		dB
$B_{W(MHL)}$	MHL path –3-dB bandwidth	V_{CC} = 2.3 V to 4.8 V, R_L = 50 Ω, f = 240 MHz	Switch ON		6.1		GHz
$B_{W(USB)}$	USB path –3-dB bandwidth	V_{CC} = 2.3 V to 4.8 V, R_L = 50 Ω,	Switch ON		6.1		GHz
SUPPLY							
V_{CC}	Power supply voltage			2.3		4.8	V
I_{CC}	Positive supply current	V_{CC} = 4.8 V, V_{IN} = V_{CC} or GND, $V_{I/O}$ = 0 V, Switch ON or OFF			30	50	µA
$I_{cc, HZ}$	Power supply current in high-Z mode	V_{CC} = 4.8 V, V_{IN} = V_{CC} or GND, $V_{I/O}$ = 0 V, Switch ON or OFF, $\overline{OE}$ = H			5	10	µA

6.7 Timing Requirements

				MIN	NOM	MAX	UNIT
t_{pd}	Propagation delay		R_L = 50 Ω, C_L = 5 pF, V_{CC} = 2.3 V to 4.8 V		100		ps
t_{switch}	Switching time (SEL to output)	See Figure 1				600	ns
$t_{ZH, ZL (MHL)}$	MHL enable time ($\overline{OE}$ to output)	$V_{I/O}$ = 3.3 V or 0 V			100		µs
$t_{HZ, LZ (MHL)}$	MHL disable time ($\overline{OE}$ to output)	$V_{I/O}$ = 3.3 V or 0 V			200		ns
$t_{ZH, ZL (USB)}$	USB enable time ($\overline{OE}$ to output)	$V_{I/O}$ = 0.8 V or 0 V			100		µs
$t_{HZ, LZ (USB)}$	USB disable time ($\overline{OE}$ to output)	$V_{I/O}$ = 0.8 V or 0 V			200		ns
$t_{SK(P)}$	Skew of opposite transitions of same output				20		ps

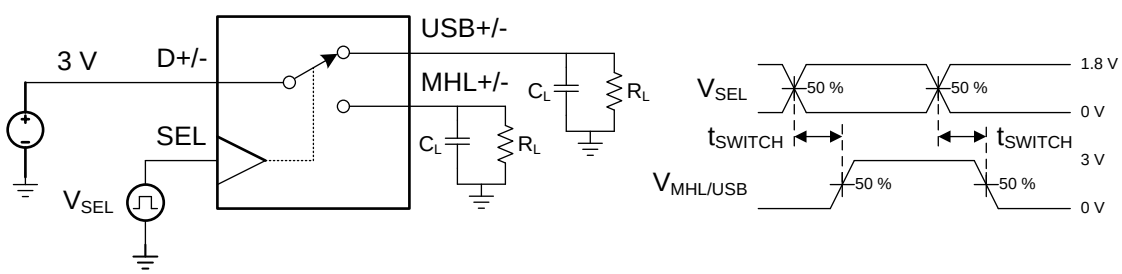

(1) All input pulses are suppleid by generators having the following characteristics: PRR ≤ 10 MHz, Z_O = 50 Ω , t_r < 5 ns, t_f < 5 ns

(2) C_L includes probe and jig capacitance.

Figure 1. Timing Diagram

6.8 Typical Characteristics

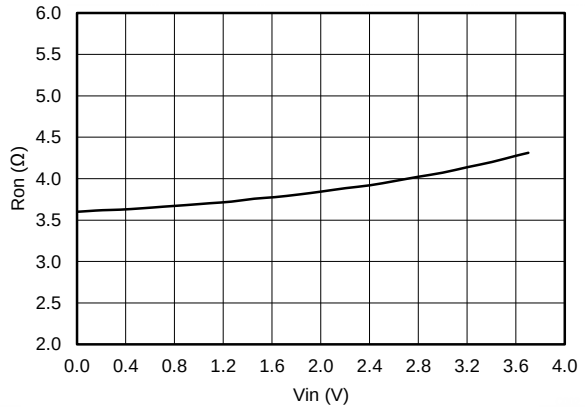

Figure 2. ON-Resistance vs VI for MHL Switch

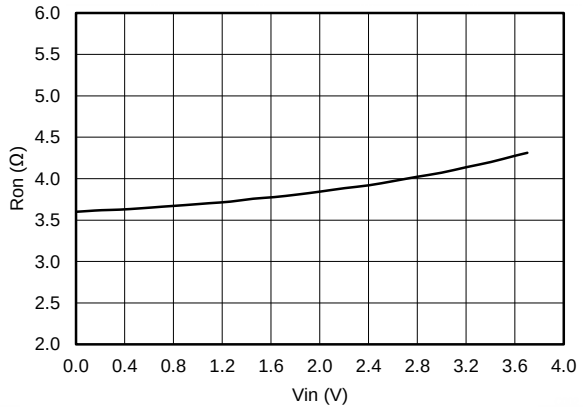

Figure 3. ON-Resistance vs VI for USB Switch

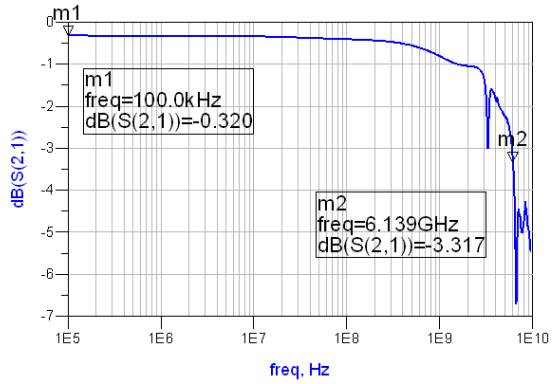

Figure 4. Differential S21 vs Frequency for MHL Switch

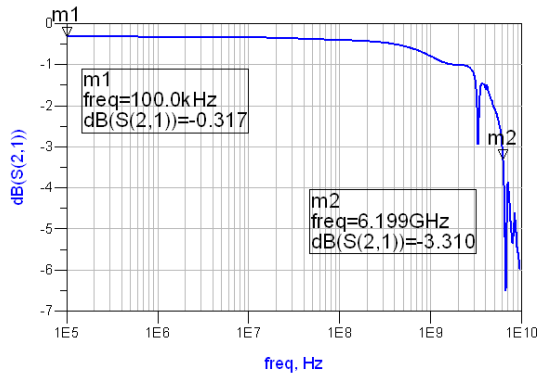

Figure 5. Differential S21 vs Frequency for USB Switch

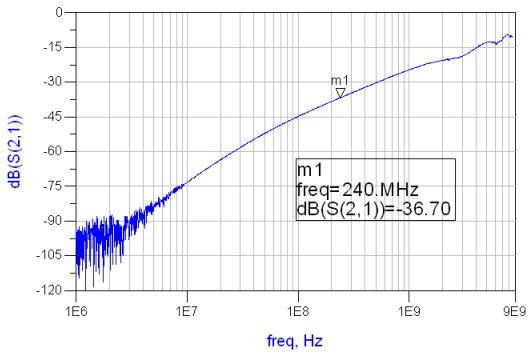

Figure 6. Off Isolation vs Frequency for MHL Path

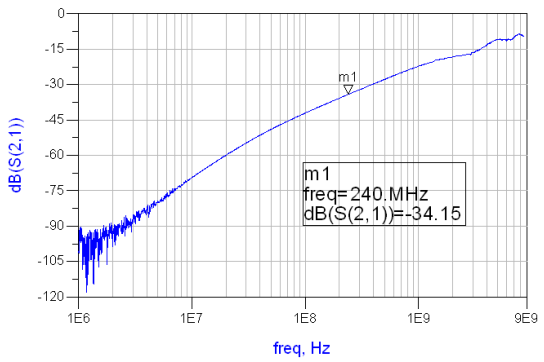

Figure 7. Off Isolation vs Frequency for USB Path

Copyright © 2012–2019, Texas Instruments Incorporated

Typical Characteristics (continued)

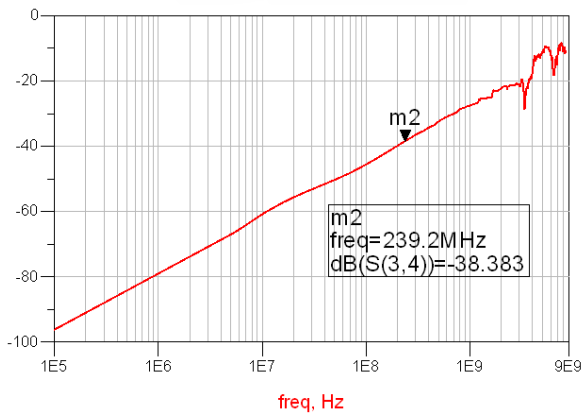

Figure 8. Cross Talk vs Frequency for MHL Path

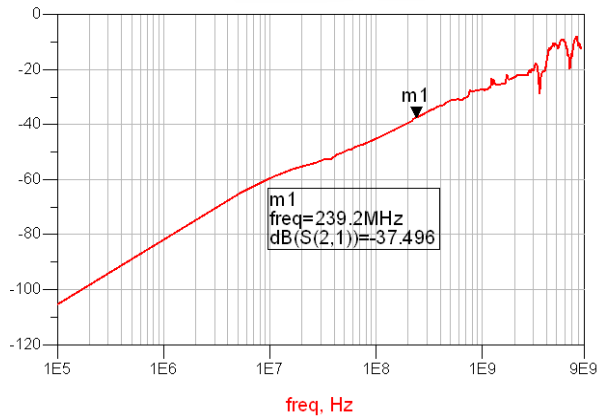

Figure 9. Cross Talk vs Frequency for USB Path

7 Parameter Measurement Information

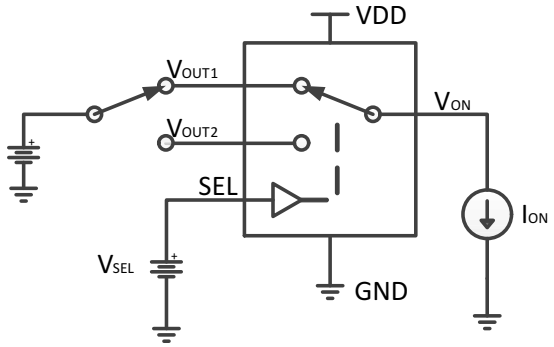

Channel ON

R_{ON} = (V_{ON} – $V_{I/O1}$) / I_{ON} or (V_{ON} – $V_{I/O2}$) / I_{ON}
V_{SEL} = H or L

Figure 10. ON-State Resistance (R_{ON})

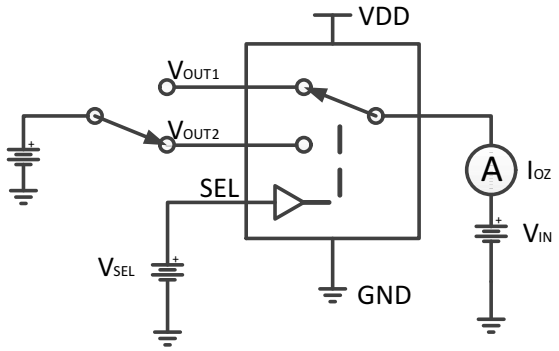

Channel OFF

V_{SEL} = H or L

Figure 11. OFF Leakage Current (I_{OZ})

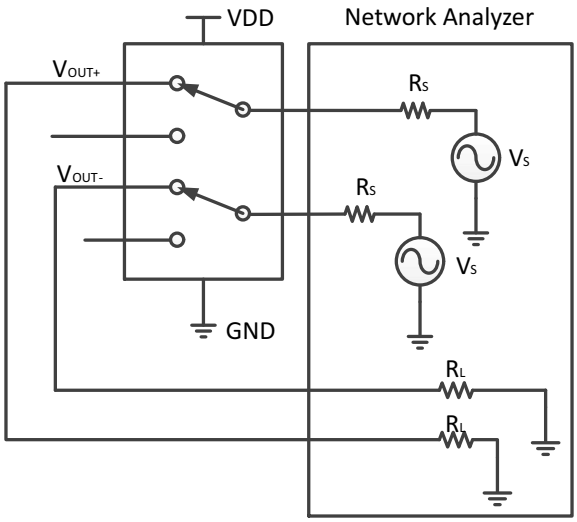

Channel ON

V_{SEL} = H or L
R_S=R_L=50Ω

Figure 12. Bandwidth (BW)

Copyright © 2012–2019, Texas Instruments Incorporated

8 Detailed Description

8.1 Overview

The TS3USB3000 device is a 2-channel SPDT switch specially designed for the switching of high-speed MHL and USB 2.0 and 3.0 signals in handset and consumer applications, such as cell phones, digital cameras, and notebooks with hubs or controllers with limited USB I/Os. The wide bandwidth (6.1 GHz) of this switch allows signals to pass with minimum edge and phase distortion. The device multiplexes differential outputs from a USB host device to one of two corresponding outputs or from one USB connector to two processors or controllers. The switch is bidirectional and offers little or no attenuation of the high-speed signals at the outputs. The device also has a low power mode that reduces the power consumption to 5 μA for portable applications with a battery or limited power budget.

The device is designed for low bit-to-bit skew and high channel-to-channel noise isolation, and is compatible with various standards, such as high-speed USB 2.0 (480 Mbps).

The TS3USB3000 device integrates ESD protection cells on all pins, is available in a tiny UQFN package (1.5 mm × 2 mm) and is characterized over the free-air temperature range from –40°C to +85°C.

8.2 Functional Block Diagram

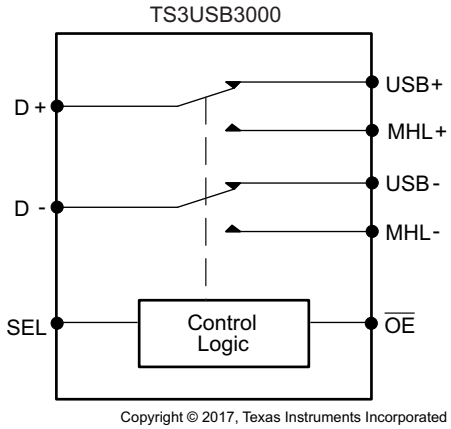

8.3 Feature Description

8.3.1 Low Power Mode

The TS3USB3000 has a low power mode that reduces the power consumption to 5 μA while the device is not in use. To put the device in low power mode and disable the switch, the bus-switch enable pin $\overline{OE}$ must be supplied with a logic High signal.

8.3.2 Overvoltage Protection When 9-V Short to D+/– Pin

This section describes how to protect the TS3USB3000 and the surrounding system when the D+/– pin is exposed to voltages greater than 5 V and less than 9 V. Voltages higher than 9 V damages the device.

In charging applications it is possible for the USB plug to be inserted in such a way that the VBUS pin shorts to the D+/– pin of the connector. If there are peripherals on the D+/– pin that cannot tolerate conditions up to 9 V they can be damaged or destroyed. The TS3USB3000 can be used to protect the system from excess voltage if the correct precautions are taken.

Feature Description (continued)

In Figure 13, the system has an application processor (AP) that cannot survive 9 V on the USB data lines. The following procedure protects the system and the TS3USB3000. As stated in the *Absolute Maximum Ratings* table footnotes, the 9 V rating is only applicable while the VCC is powered within the voltage range of the recommended operating conditions and the $\overline{OE}$ pin is high.

1. After a charger is connected to the USB port, the AP detects that a DCP is attached.
2. The AP pulls the $\overline{OE}$ pin high to disable the switches.
3. The AP communicates to the Charger that it can negotiate for a faster charging mode with VBUS at 9 V.
4. The TS3USB3000 is now in a low-power state with the switches disabled and can protect the AP.

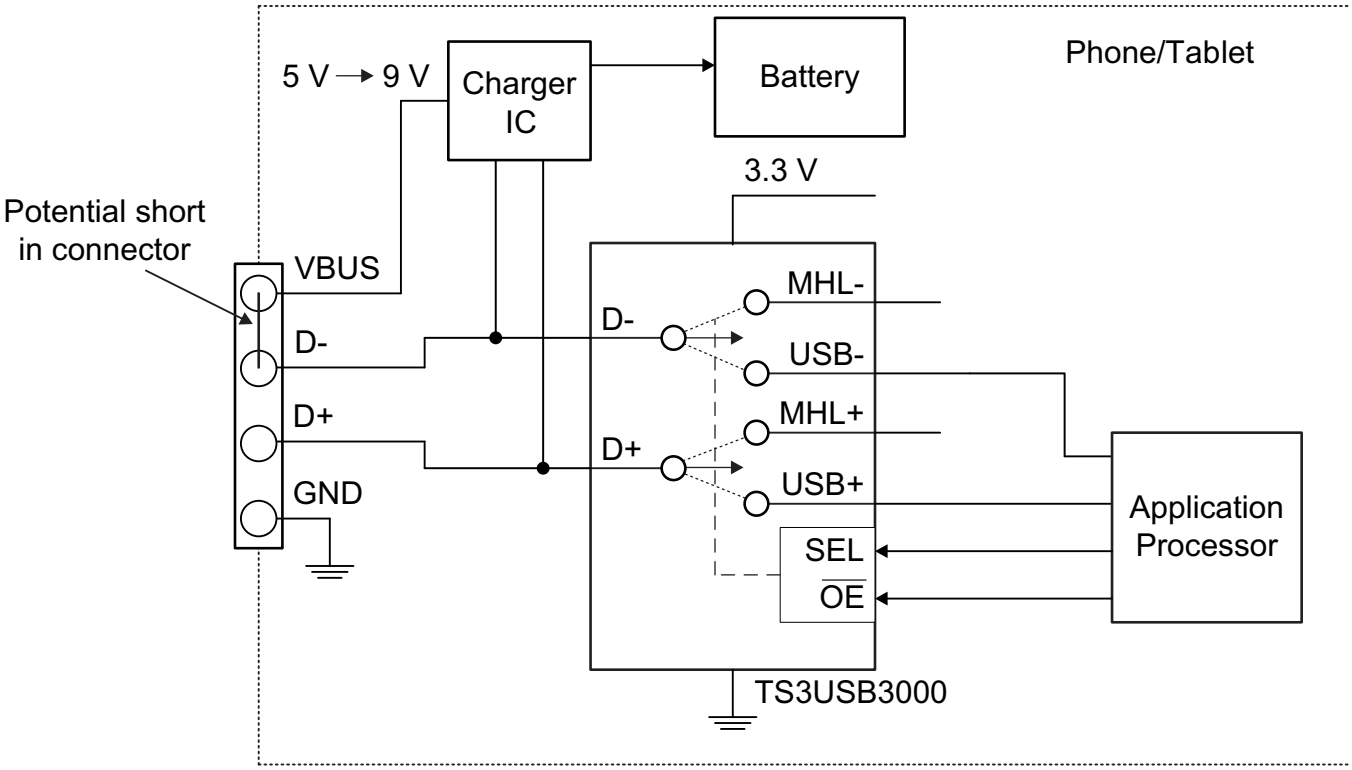

Copyright © 2017, Texas Instruments Incorporated

Figure 13. Potential VBUS to D+/– Short Example

Copyright © 2012–2019, Texas Instruments Incorporated

Feature Description (continued)

8.3.3 Pin Leakage

When the voltage on the D+/– pins rises above VCC +1 V a leakage path in the device starts conducting as shown in Figure 14. The amount of leakage depends on the VCC voltage and the pin voltage. This leakage is governed by Equation 1:

$$Pin\ Leakage = \frac{V_D - V_{CC}}{12000} \tag{1}$$

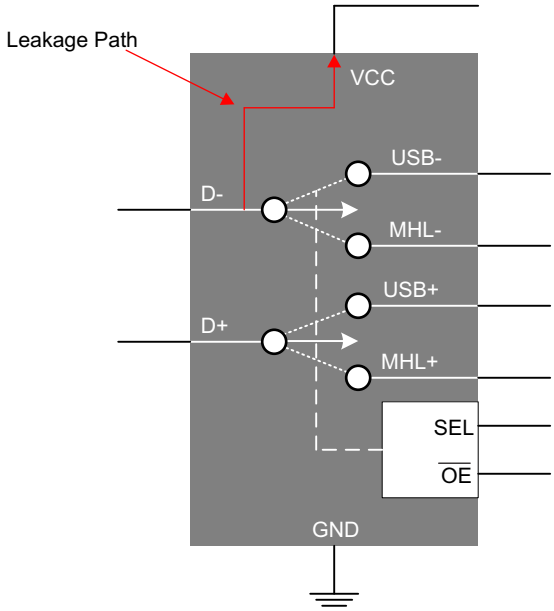

Figure 14. Potential Leakage Path D+/– to VCC

8.4 Device Functional Modes

8.4.1 High Impedance Mode

The TS3USB3000 has a high impedance mode that places all the signal paths in a Hi-Z state while the device is not in use. To put the device in high impedance mode and disable the switch, the bus-switch enable pin $\overline{OE}$ must be supplied with a logic *High* signal as shown in Table 1.

Table 1. Function Table

SEL	$\overline{OE}$	SWITCH STATUS
X	High	Both USB and MHL switches in High-Z
Low	Low	D+/D– to USB+/USB–
High	Low	D+/D– to MHL+/MHL–

9 Application and Implementation

NOTE

Information in the following applications sections is not part of the TI component specification, and TI does not warrant its accuracy or completeness. TI's customers are responsible for determining suitability of components for their purposes. Customers should validate and test their design implementation to confirm system functionality.

9.1 Application Information

There are many USB applications in which the USB hubs or controllers have a limited number of USB I/Os or need to route signals from a single USB connector. The TS3USB3000 solution can effectively expand the limited USB I/Os by switching between multiple USB buses to interface them to a single USB hub or controller or route signals from on connector to two different locations.

9.2 Typical Application

Figure 15 represents a typical application of the TS3USB3000 USB/MHL switch. The TS3USB3000 is used to switch signals between the USB path, which goes to the baseband or application processor, or the MHL path, which goes to the HDMI to MHL bridge. The TS3USB3000 has internal 6-MΩ pulldown resistors on SEL and $\overline{OE}$. The pulldown on SEL ensure the USB channel is selected by default. The pulldown on $\overline{OE}$ enables the switch when power is applied. The TS5A3157 is a separate SPDT switch that is used to switch between MHL's CBUS and the USB ID line that is needed for USB OTG (USB On-The-Go) application.

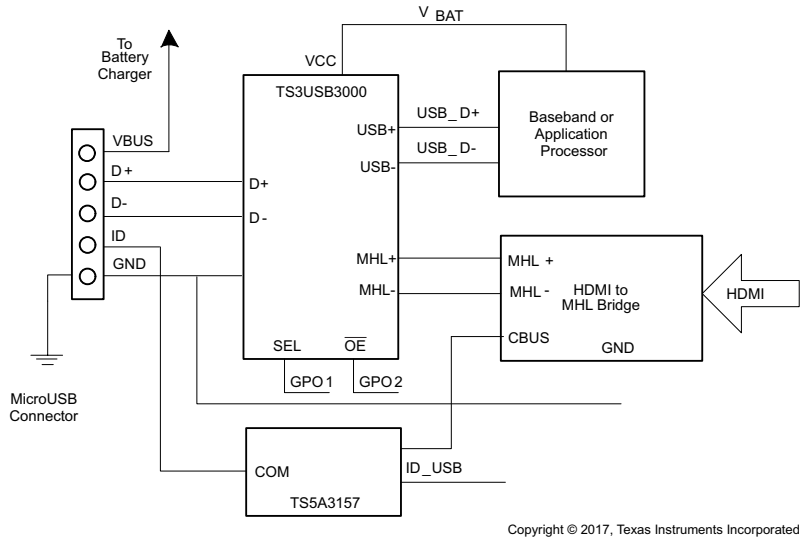

Figure 15. Typical TS3USB3000 Application

9.2.1 Design Requirements

Design requirements of the MHL and USB 1.0,1.1, and 2.0 standards must be followed. The TS3USB3000 has internal 6-MΩ pulldown resistors on SEL and $\overline{OE}$, so no external resistors are required on the logic pins. The internal pulldown resistor on SEL ensures the USB channel is selected by default. The internal pulldown resistor on $\overline{OE}$ enables the switch when power is applied to VCC.

9.2.2 Detailed Design Procedure

The TS3USB3000 can be properly operated without any external components. However, TI recommends that unused pins must be connected to ground through a 50-Ω resistor to prevent signal reflections back into the device.

Copyright © 2012–2019, Texas Instruments Incorporated

Typical Application (continued)

9.2.3 Application Curves

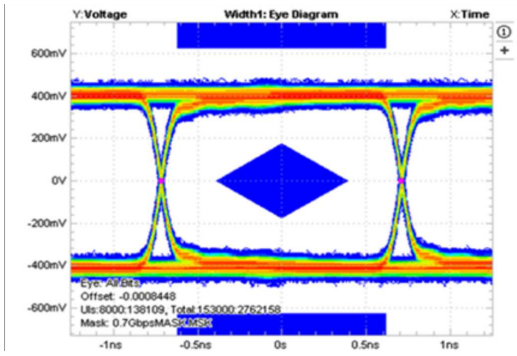

Figure 16. Eye Pattern: 0.7 Gbps With No Device

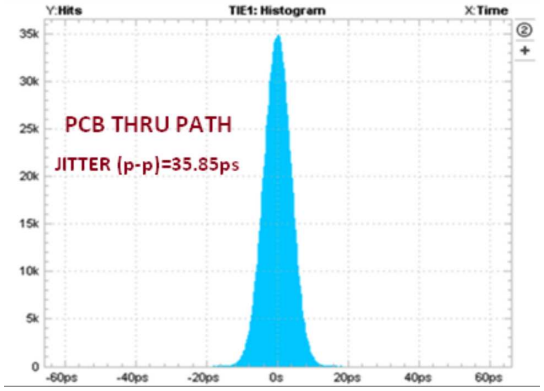

Figure 17. Time Interval Error Histogram: 0.7 Gbps With No Device

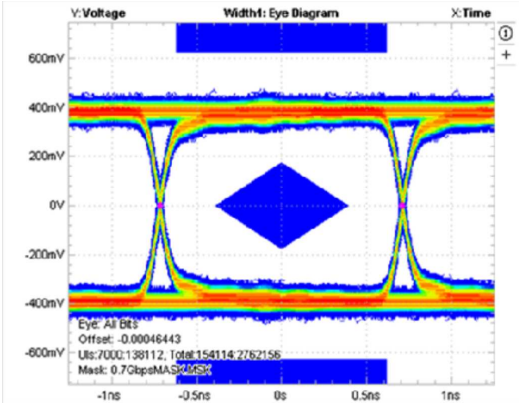

The TS3USB3000 contributes only 8.4 ps of peak-to-peak jitter for 0.7-Gbps data rate

Figure 18. Eye Pattern: 0.7 Gbps for MHL Switch

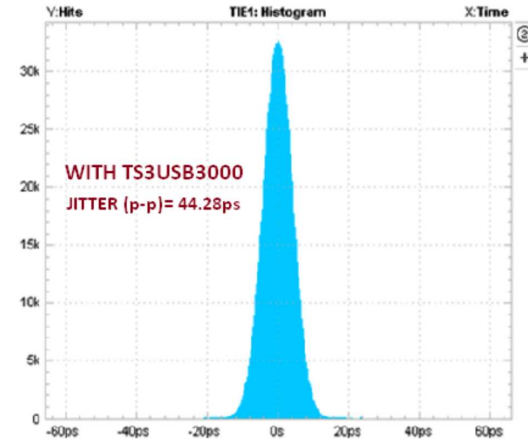

The TS3USB3000 contributes only 8.4 ps of peak-to-peak jitter for 0.7-Gbps data rate

Figure 19. Time Interval Error Histogram: 0.7 Gbps for MHL Switch

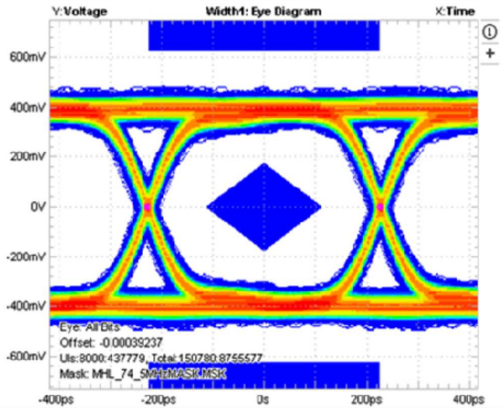

Figure 20. Eye Pattern: 2.2 Gbps With No Device

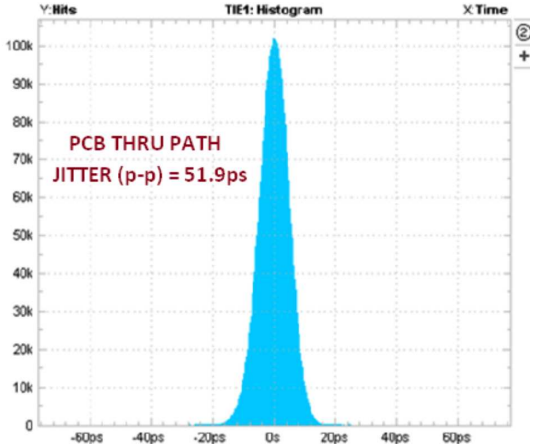

Figure 21. Time Interval Error Histogram: 2.2 Gbps With No Device

Typical Application (continued)

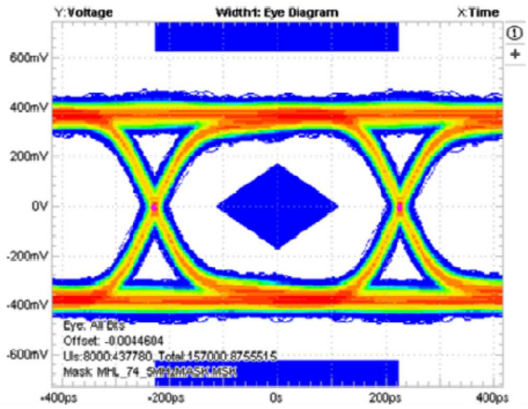

The TS3USB3000 contributes only 3.8 ps of peak-to-peak jitter for 2.2-Gbps data rate

Figure 22. Eye Pattern: 2.2 Gbps for MHL Switch

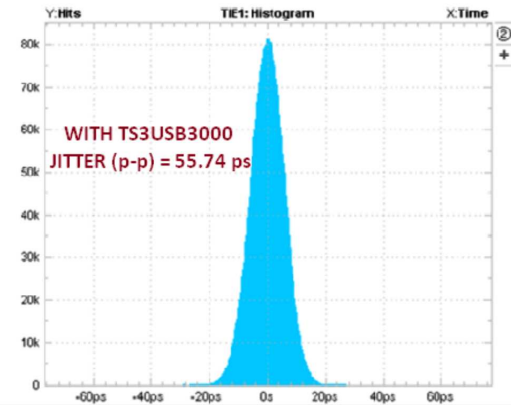

The TS3USB3000 contributes only 3.8 ps of peak-to-peak jitter for 2.2-Gbps data rate

Figure 23. Time Interval Error Histogram: 2.2 Gbps for MHL Switch

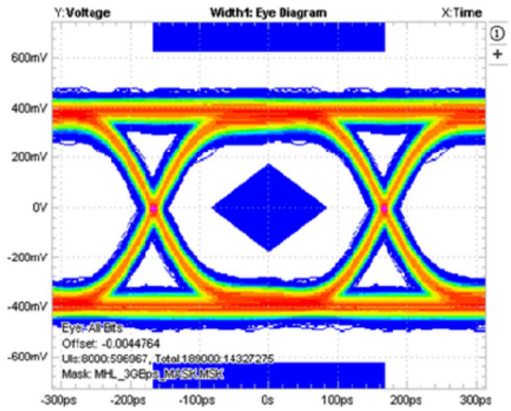

Figure 24. Eye Pattern: 3 Gbps With No Device

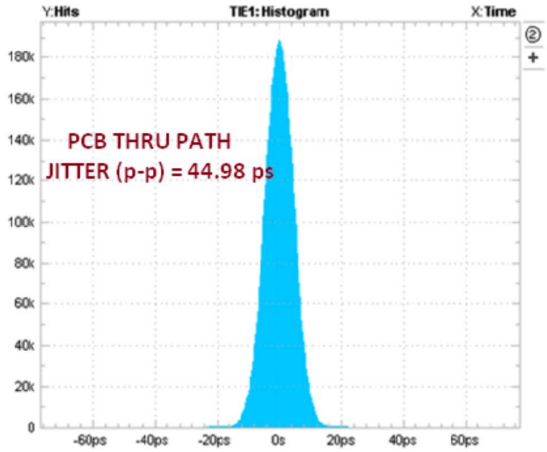

Figure 25. Time Interval Error Histogram: 3 Gbps With No Device

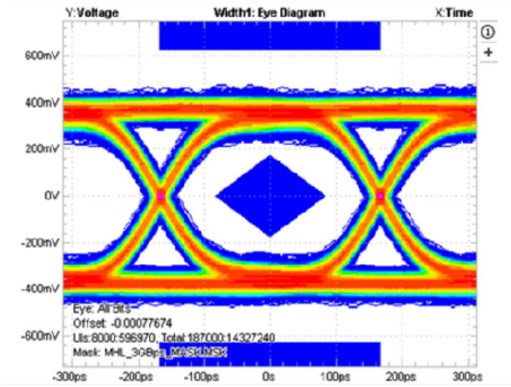

The TS3USB3000 contributes only 5.8 ps of peak-to-peak jitter for 3-Gbps data rate

Figure 26. Eye Pattern: 3 Gbps for MHL Switch

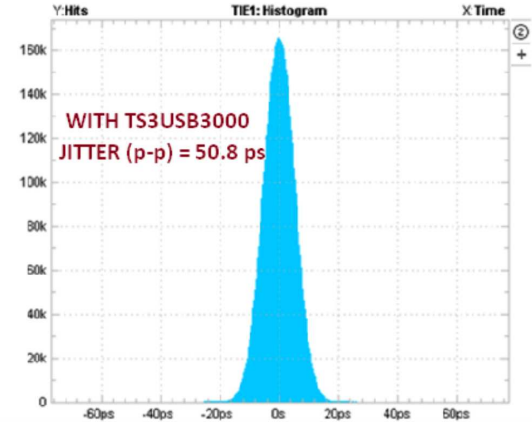

The TS3USB3000 contributes only 5.8 ps of peak-to-peak jitter for 3-Gbps data rate

Figure 27. Time Interval Error Histogram: 3 Gbps for MHL Switch

Copyright © 2012–2019, Texas Instruments Incorporated

Typical Application (continued)

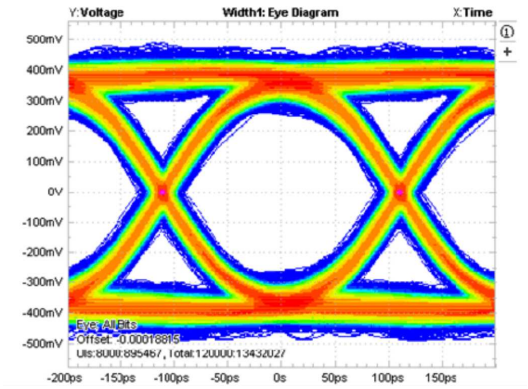

Figure 28. Eye Pattern: 4.5 Gbps With No Device

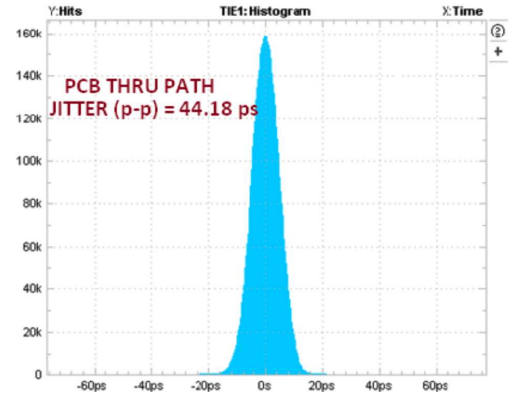

Figure 29. Time Interval Error Histogram: 4.5 Gbps With No Device

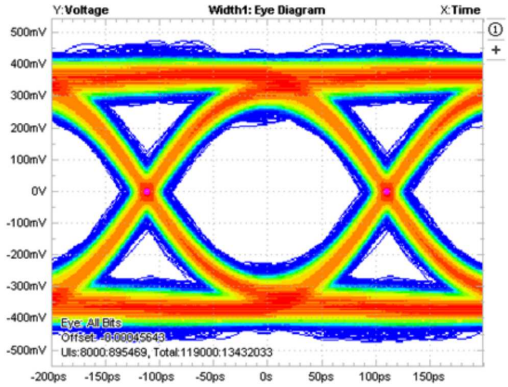

The TS3USB3000 contributes only 7.6 ps of peak-to-peak jitter for 4.5-Gbps data rate

Figure 30. Eye Pattern: 4.5 Gbps for MHL Switch

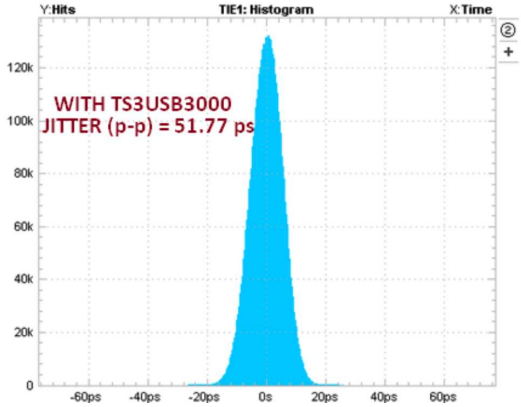

The TS3USB3000 contributes only 7.6 ps of peak-to-peak jitter for 4.5-Gbps data rate

Figure 31. Time Interval Error Histogram: 4.5 Gbps for MHL Switch

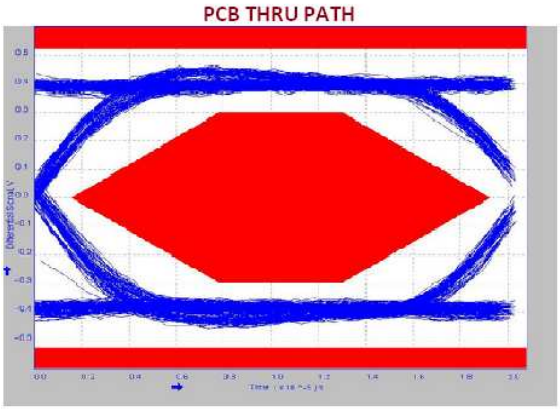

Figure 32. 480-Mbps USB 2.0 Eye Pattern With No Device

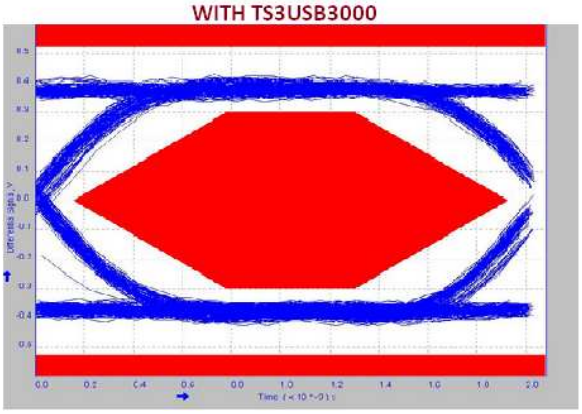

Figure 33. 480-Mbps USB 2.0 Eye Pattern for USB Switch

10 Power Supply Recommendations

Power to the device is supplied through the VCC pin and must follow the USB 1.0, 1.1, and 2.0 standards. TI recommends placing a bypass capacitor as close to the supply pin VCC as possible to help smooth out lower frequency noise to provide better load regulation across the frequency spectrum.

11 Layout

11.1 Layout Guidelines

Place supply bypass capacitors as close to VCC pin as possible and avoid placing the bypass caps near the D± traces.

The high-speed D± must match and be no more than 4 inches long; otherwise, the eye diagram performance may be degraded. A high-speed USB connection is made through a shielded, twisted pair cable with a differential characteristic impedance. In layout, the impedance of D+ and D– traces must match the cable characteristic differential impedance for optimal performance.

Route the high-speed USB signals using a minimum of vias and corners which reduces signal reflections and impedance changes. When a via must be used, increase the clearance size around it to minimize its capacitance. Each via introduces discontinuities in the signal's transmission line and increases the chance of picking up interference from the other layers of the board. Be careful when designing test points on twisted pair lines; through-hole pins are not recommended.

When it becomes necessary to turn 90°, use two 45° turns or an arc instead of making a single 90° turn. This reduces reflections on the signal traces by minimizing impedance discontinuities.

Do not route USB traces under or near crystals, oscillators, clock signal generators, switching regulators, mounting holes, magnetic devices or ICs that use or duplicate clock signals.

Avoid stubs on the high-speed USB signals because they cause signal reflections. If a stub is unavoidable, then the stub must be less than 200 mm.

Route all high-speed USB signal traces over continuous GND planes, with no interruptions.

Avoid crossing over anti-etch, commonly found with plane splits.

Due to high frequencies associated with the USB, a printed circuit board with at least four layers is recommended; two signal layers separated by a ground and power layer as shown in Figure 34.

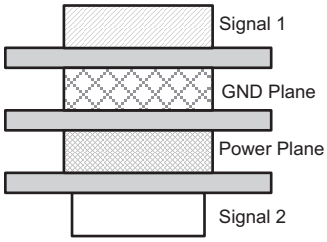

Figure 34. Four-Layer Board Stack-Up

The majority of signal traces must run on a single layer, preferably Signal 1. Immediately next to this layer must be the GND plane, which is solid with no cuts. Avoid running signal traces across a split in the ground or power plane. When running across split planes is unavoidable, sufficient decoupling must be used. Minimizing the number of signal vias reduces EMI by reducing inductance at high frequencies.

Copyright © 2012–2019, Texas Instruments Incorporated

11.2 Layout Example

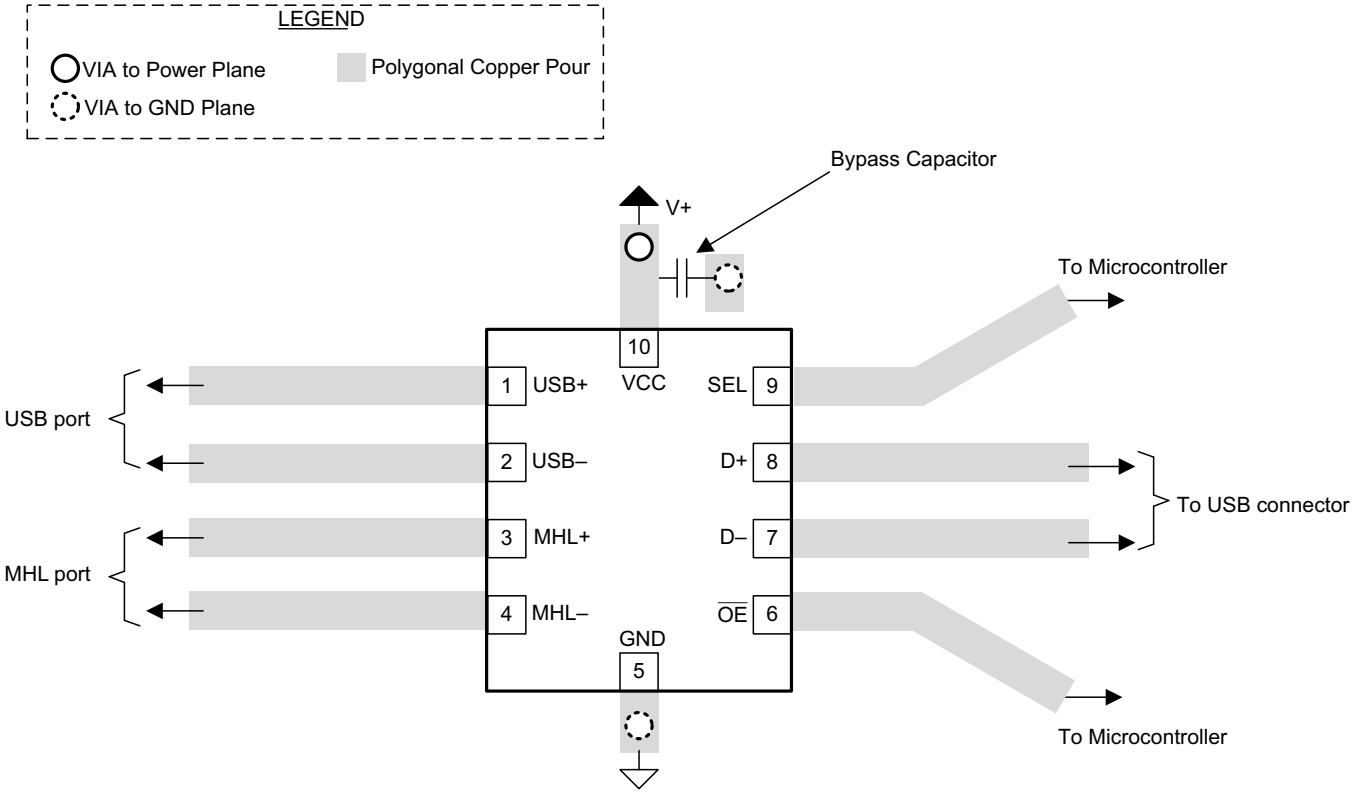

Figure 35. Package Layout Diagram

12 Device and Documentation Support

12.1 Documentation Support

12.1.1 Related Documentation

For related documentation see the following:

- *USB 2.0 Board Design and Layout Guidelines*
- *High-Speed Layout Guidelines Application Report*
- *High-Speed Interface Layout Guidelines*

12.2 Receiving Notification of Documentation Updates

To receive notification of documentation updates, navigate to the device product folder on ti.com. In the upper right corner, click on *Alert me* to register and receive a weekly digest of any product information that has changed. For change details, review the revision history included in any revised document.

12.3 Community Resources

The following links connect to TI community resources. Linked contents are provided "AS IS" by the respective contributors. They do not constitute TI specifications and do not necessarily reflect TI's views; see TI's Terms of Use.

TI E2E™ Online Community ***TI's Engineer-to-Engineer (E2E) Community.*** Created to foster collaboration among engineers. At e2e.ti.com, you can ask questions, share knowledge, explore ideas and help solve problems with fellow engineers.

Design Support ***TI's Design Support*** Quickly find helpful E2E forums along with design support tools and contact information for technical support.

12.4 Trademarks

E2E is a trademark of Texas Instruments.
All other trademarks are the property of their respective owners.

12.5 Electrostatic Discharge Caution

These devices have limited built-in ESD protection. The leads should be shorted together or the device placed in conductive foam during storage or handling to prevent electrostatic damage to the MOS gates.

12.6 Glossary

SLYZ022 — *TI Glossary*.

This glossary lists and explains terms, acronyms, and definitions.

13 Mechanical, Packaging, and Orderable Information

The following pages include mechanical, packaging, and orderable information. This information is the most current data available for the designated devices. This data is subject to change without notice and revision of this document. For browser-based versions of this data sheet, refer to the left-hand navigation.

Copyright © 2012–2019, Texas Instruments Incorporated

13.1 Package Option Addendum

13.1.1 Packaging Information

Orderable Device	Status (1)	Package Type	Package Drawing	Pins	Package Qty	Eco Plan (2)	Lead/Ball Finish(3)	MSL Peak Temp (4)	Op Temp (°C)	Device Marking(5)(6)
TS3USB3000MRSER	ACTIVE	UQFN	RSE	10	3000	Green (RoHS & no Sb/Br)	CU NIPDAU	Level-1-260C-UNLIM	-40 to 85	DRJ, DR0, DRR
TS3USB3000RSER	ACTIVE	UQFN	RSE	10	3000	Green (RoHS & no Sb/Br)	CU NIPDAU	Level-1-260C-UNLIM	-40 to 85	DSJ, DSO, DSR

(1) The marketing status values are defined as follows:
ACTIVE: Product device recommended for new designs.
LIFEBUY: TI has announced that the device will be discontinued, and a lifetime-buy period is in effect.
NRND: Not recommended for new designs. Device is in production to support existing customers, but TI does not recommend using this part in a new design.
PRE_PROD Unannounced device, not in production, not available for mass market, nor on the web, samples not available.
PREVIEW: Device has been announced but is not in production. Samples may or may not be available.
OBSOLETE: TI has discontinued the production of the device.

(2) Eco Plan - The planned eco-friendly classification: Pb-Free (RoHS), Pb-Free (RoHS Exempt), or Green (RoHS & no Sb/Br) - please check http://www.ti.com/productcontent for the latest availability information and additional product content details.
TBD: The Pb-Free/Green conversion plan has not been defined.
Pb-Free (RoHS): TI's terms "Lead-Free" or "Pb-Free" mean semiconductor products that are compatible with the current RoHS requirements for all 6 substances, including the requirement that lead not exceed 0.1% by weight in homogeneous materials. Where designed to be soldered at high temperatures, TI Pb-Free products are suitable for use in specified lead-free processes.
Pb-Free (RoHS Exempt): This component has a RoHS exemption for either 1) lead-based flip-chip solder bumps used between the die and package, or 2) lead-based die adhesive used between the die and leadframe. The component is otherwise considered Pb-Free (RoHS compatible) as defined above.
Green (RoHS & no Sb/Br): TI defines "Green" to mean Pb-Free (RoHS compatible), and free of Bromine (Br) and Antimony (Sb) based flame retardants (Br or Sb do not exceed 0.1% by weight in homogeneous material)

(3) Lead/Ball Finish - Orderable Devices may have multiple material finish options. Finish options are separated by a vertical ruled line. Lead/Ball Finish values may wrap to two lines if the finish value exceeds the maximum column width.

(4) MSL, Peak Temp. -- The Moisture Sensitivity Level rating according to the JEDEC industry standard classifications, and peak solder temperature.

(5) There may be additional marking, which relates to the logo, the lot trace code information, or the environmental category on the device

(6) Multiple Device markings will be inside parentheses. Only one Device Marking contained in parentheses and separated by a "~" will appear on a device. If a line is indented then it is a continuation of the previous line and the two combined represent the entire Device Marking for that device.

Important Information and Disclaimer: The information provided on this page represents TI's knowledge and belief as of the date that it is provided. TI bases its knowledge and belief on information provided by third parties, and makes no representation or warranty as to the accuracy of such information. Efforts are underway to better integrate information from third parties. TI has taken and continues to take reasonable steps to provide representative and accurate information but may not have conducted destructive testing or chemical analysis on incoming materials and chemicals. TI and TI suppliers consider certain information to be proprietary, and thus CAS numbers and other limited information may not be available for release.

In no event shall TI's liability arising out of such information exceed the total purchase price of the TI part(s) at issue in this document sold by TI to Customer on an annual basis.

TAPE AND REEL INFORMATION

REEL DIMENSIONS

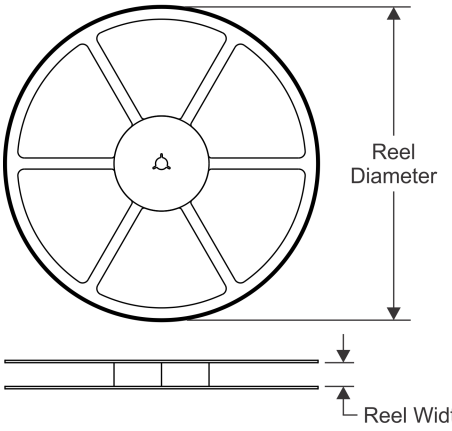

TAPE DIMENSIONS

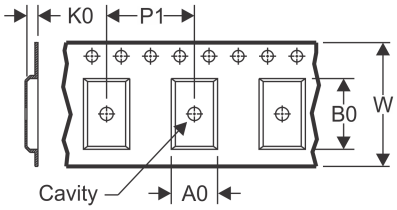

A0	Dimension designed to accommodate the component width
B0	Dimension designed to accommodate the component length
K0	Dimension designed to accommodate the component thickness
W	Overall width of the carrier tape
P1	Pitch between successive cavity centers

QUADRANT ASSIGNMENTS FOR PIN 1 ORIENTATION IN TAPE

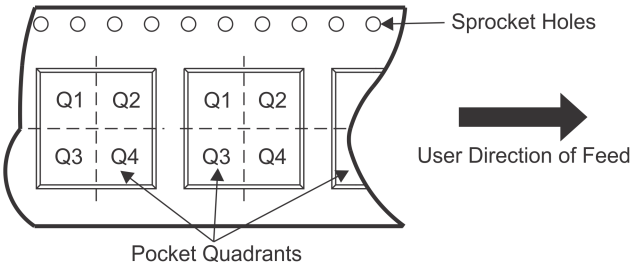

*All dimensions are nominal

Device	Package Type	Package Drawing	Pins	SPQ	Reel Diameter (mm)	Reel Width W1 (mm)	A0 (mm)	B0 (mm)	K0 (mm)	P1 (mm)	W (mm)	Pin1 Quadrant
TS3USB3000MRSER	UQFN	RSE	10	3000	180.0	9.5	2.2	1.8	0.75	4.0	8.0	Q3
TS3USB3000RSER	UQFN	RSE	10	3000	180.0	9.5	1.7	2.2	0.75	4.0	8.0	Q1

TAPE AND REEL BOX DIMENSIONS

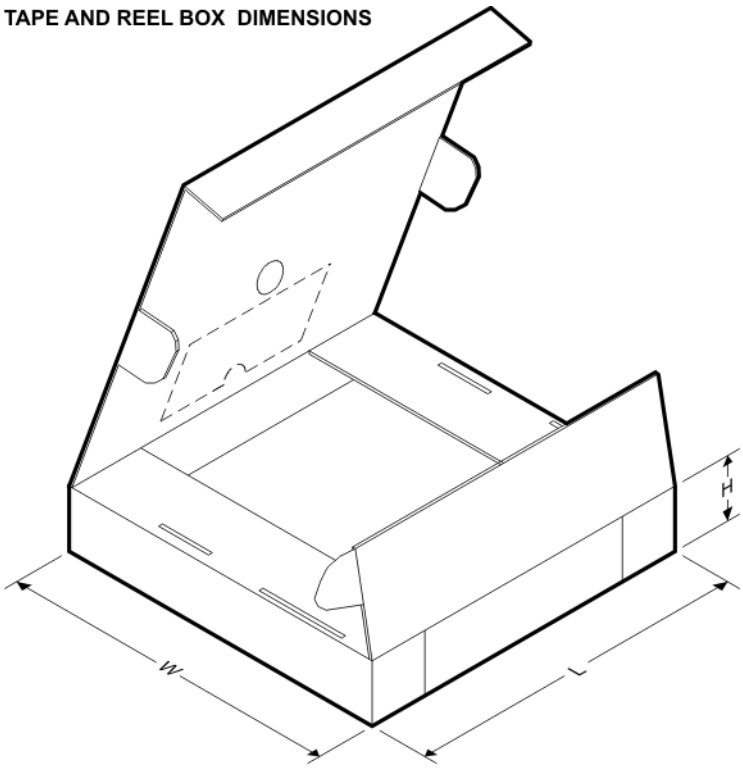

*All dimensions are nominal

Device	Package Type	Package Drawing	Pins	SPQ	Length (mm)	Width (mm)	Height (mm)
TS3USB3000MRSER	UQFN	RSE	10	3000	189.0	185.0	36.0
TS3USB3000RSER	UQFN	RSE	10	3000	189.0	185.0	36.0

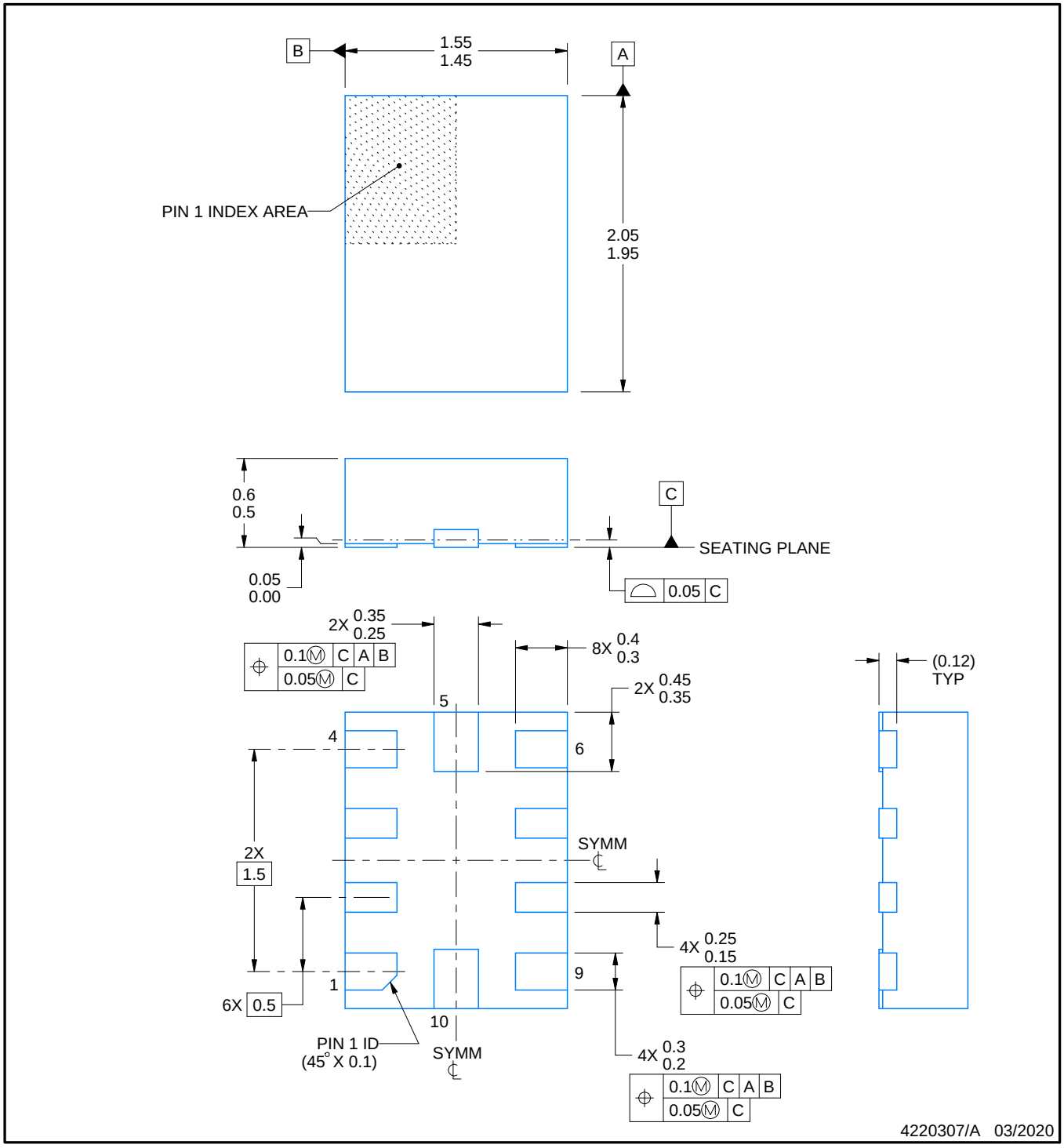

NOTES:

1. All linear dimensions are in millimeters. Any dimensions in parenthesis are for reference only. Dimensioning and tolerancing per ASME Y14.5M.
2. This drawing is subject to change without notice.

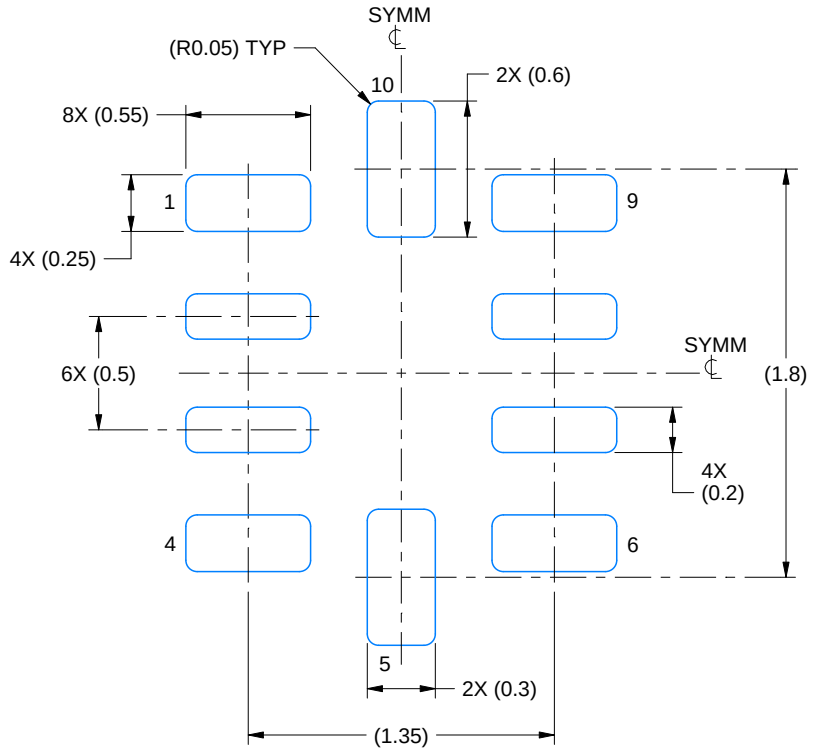

LAND PATTERN EXAMPLE
EXPOSED METAL SHOWN
SCALE:30X

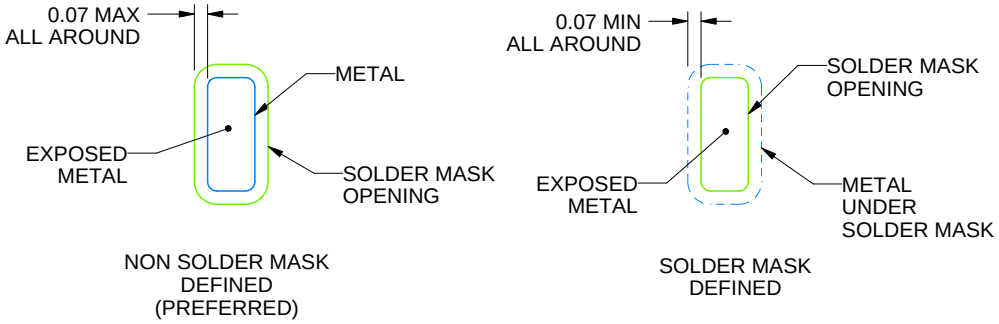

SOLDER MASK DETAILS
NOT TO SCALE

4220307/A 03/2020

NOTES: (continued)

3. For more information, see Texas Instruments literature number SLUA271 (www.ti.com/lit/slua271).

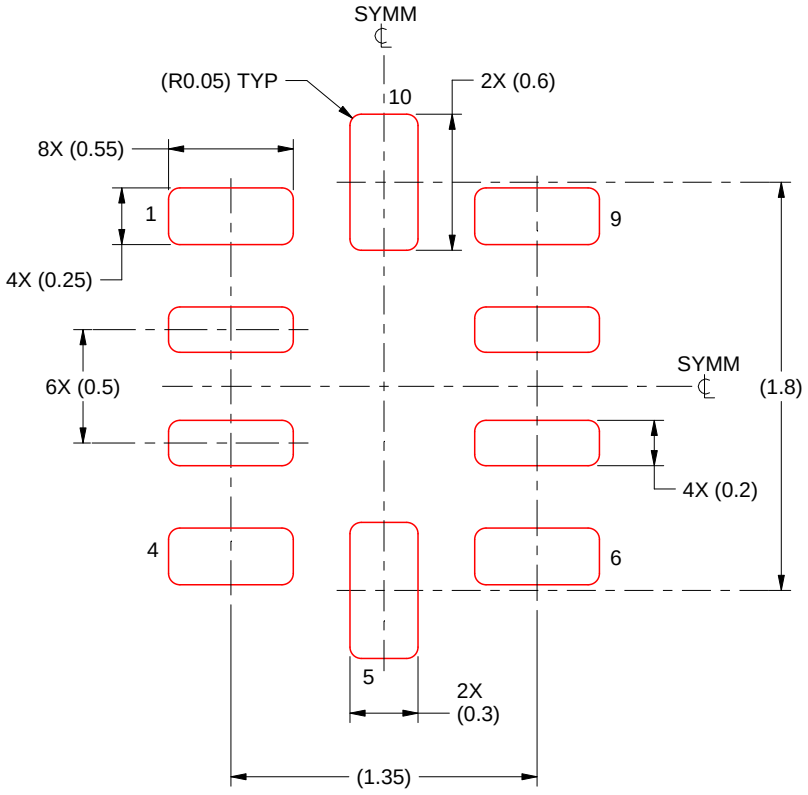

SOLDER PASTE EXAMPLE
BASED ON 0.1 mm THICKNESS
SCALE: 30X

4220307/A 03/2020

NOTES: (continued)

5. Laser cutting apertures with trapezoidal walls and rounded corners may offer better paste release. IPC-7525 may have alternate design recommendations.

IMPORTANT NOTICE AND DISCLAIMER

TI PROVIDES TECHNICAL AND RELIABILITY DATA (INCLUDING DATASHEETS), DESIGN RESOURCES (INCLUDING REFERENCE DESIGNS), APPLICATION OR OTHER DESIGN ADVICE, WEB TOOLS, SAFETY INFORMATION, AND OTHER RESOURCES “AS IS” AND WITH ALL FAULTS, AND DISCLAIMS ALL WARRANTIES, EXPRESS AND IMPLIED, INCLUDING WITHOUT LIMITATION ANY IMPLIED WARRANTIES OF MERCHANTABILITY, FITNESS FOR A PARTICULAR PURPOSE OR NON-INFRINGEMENT OF THIRD PARTY INTELLECTUAL PROPERTY RIGHTS.

These resources are intended for skilled developers designing with TI products. You are solely responsible for (1) selecting the appropriate TI products for your application, (2) designing, validating and testing your application, and (3) ensuring your application meets applicable standards, and any other safety, security, or other requirements. These resources are subject to change without notice. TI grants you permission to use these resources only for development of an application that uses the TI products described in the resource. Other reproduction and display of these resources is prohibited. No license is granted to any other TI intellectual property right or to any third party intellectual property right. TI disclaims responsibility for, and you will fully indemnify TI and its representatives against, any claims, damages, costs, losses, and liabilities arising out of your use of these resources.

TI’s products are provided subject to TI’s Terms of Sale (www.ti.com/legal/termsofsale.html) or other applicable terms available either on ti.com or provided in conjunction with such TI products. TI’s provision of these resources does not expand or otherwise alter TI’s applicable warranties or warranty disclaimers for TI products.

Mailing Address: Texas Instruments, Post Office Box 655303, Dallas, Texas 75265
Copyright © 2020, Texas Instruments Incorporated