TPS2231EVM

ExpressCard Power-Interface Switch Evaluation Module

User's Guide

July 2004

PMP Systems Power

SLVU113

IMPORTANT NOTICE

Texas Instruments Incorporated and its subsidiaries (TI) reserve the right to make corrections, modifications, enhancements, improvements, and other changes to its products and services at any time and to discontinue any product or service without notice. Customers should obtain the latest relevant information before placing orders and should verify that such information is current and complete. All products are sold subject to TI's terms and conditions of sale supplied at the time of order acknowledgment.

TI warrants performance of its hardware products to the specifications applicable at the time of sale in accordance with TI's standard warranty. Testing and other quality control techniques are used to the extent TI deems necessary to support this warranty. Except where mandated by government requirements, testing of all parameters of each product is not necessarily performed.

TI assumes no liability for applications assistance or customer product design. Customers are responsible for their products and applications using TI components. To minimize the risks associated with customer products and applications, customers should provide adequate design and operating safeguards.

TI does not warrant or represent that any license, either express or implied, is granted under any TI patent right, copyright, mask work right, or other TI intellectual property right relating to any combination, machine, or process in which TI products or services are used. Information published by TI regarding third-party products or services does not constitute a license from TI to use such products or services or a warranty or endorsement thereof. Use of such information may require a license from a third party under the patents or other intellectual property of the third party, or a license from TI under the patents or other intellectual property of TI.

Reproduction of information in TI data books or data sheets is permissible only if reproduction is without alteration and is accompanied by all associated warranties, conditions, limitations, and notices. Reproduction of this information with alteration is an unfair and deceptive business practice. TI is not responsible or liable for such altered documentation.

Resale of TI products or services with statements different from or beyond the parameters stated by TI for that product or service voids all express and any implied warranties for the associated TI product or service and is an unfair and deceptive business practice. TI is not responsible or liable for any such statements.

Following are URLs where you can obtain information on other Texas Instruments products and application solutions:

Products		**Applications**	
Amplifiers	amplifier.ti.com	Audio	www.ti.com/audio
Data Converters	dataconverter.ti.com	Automotive	www.ti.com/automotive
DSP	dsp.ti.com	Broadband	www.ti.com/broadband
Interface	interface.ti.com	Digital Control	www.ti.com/digitalcontrol
Logic	logic.ti.com	Military	www.ti.com/military
Power Mgmt	power.ti.com	Optical Networking	www.ti.com/opticalnetwork
Microcontrollers	microcontroller.ti.com	Security	www.ti.com/security
		Telephony	www.ti.com/telephony
		Video & Imaging	www.ti.com/video
		Wireless	www.ti.com/wireless

Mailing Address: Texas Instruments
Post Office Box 655303 Dallas, Texas 75265

Copyright © 2004, Texas Instruments Incorporated

EVM IMPORTANT NOTICE

Texas Instruments (TI) provides the enclosed product(s) under the following conditions:

This evaluation kit being sold by TI is intended for use for **ENGINEERING DEVELOPMENT OR EVALUATION PURPOSES ONLY** and is not considered by TI to be fit for commercial use. As such, the goods being provided may not be complete in terms of required design-, marketing-, and/or manufacturing-related protective considerations, including product safety measures typically found in the end product incorporating the goods. As a prototype, this product does not fall within the scope of the European Union directive on electromagnetic compatibility and therefore may not meet the technical requirements of the directive.

Should this evaluation kit not meet the specifications indicated in the EVM User's Guide, the kit may be returned within 30 days from the date of delivery for a full refund. THE FOREGOING WARRANTY IS THE EXCLUSIVE WARRANTY MADE BY SELLER TO BUYER AND IS IN LIEU OF ALL OTHER WARRANTIES, EXPRESSED, IMPLIED, OR STATUTORY, INCLUDING ANY WARRANTY OF MERCHANTABILITY OR FITNESS FOR ANY PARTICULAR PURPOSE.

The user assumes all responsibility and liability for proper and safe handling of the goods. Further, the user indemnifies TI from all claims arising from the handling or use of the goods. Please be aware that the products received may not be regulatory compliant or agency certified (FCC, UL, CE, etc.). Due to the open construction of the product, it is the user's responsibility to take any and all appropriate precautions with regard to electrostatic discharge.

EXCEPT TO THE EXTENT OF THE INDEMNITY SET FORTH ABOVE, NEITHER PARTY SHALL BE LIABLE TO THE OTHER FOR ANY INDIRECT, SPECIAL, INCIDENTAL, OR CONSEQUENTIAL DAMAGES.

TI currently deals with a variety of customers for products, and therefore our arrangement with the user **is not exclusive**.

TI assumes **no liability for applications assistance, customer product design, software performance, or infringement of patents or services described herein**.

Please read the EVM User's Guide and, specifically, the EVM Warnings and Restrictions notice in the EVM User's Guide prior to handling the product. This notice contains important safety information about temperatures and voltages. For further safety concerns, please contact the TI application engineer.

Persons handling the product must have electronics training and observe good laboratory practice standards.

No license is granted under any patent right or other intellectual property right of TI covering or relating to any machine, process, or combination in which such TI products or services might be or are used.

Mailing Address:

Texas Instruments
Post Office Box 655303
Dallas, Texas 75265

Copyright © 2004, Texas Instruments Incorporated

EVM WARNINGS AND RESTRICTIONS

It is important to operate this EVM within the input voltage range of 1.6 V and 3.6 V and the output voltage range of 1.6 V and 3.6 V.

Exceeding the specified input range may cause unexpected operation and/or irreversible damage to the EVM. If there are questions concerning the input range, please contact a TI field representative prior to connecting the input power.

Applying loads outside of the specified output range may result in unintended operation and/or possible permanent damage to the EVM. Please consult the EVM User's Guide prior to connecting any load to the EVM output. If there is uncertainty as to the load specification, please contact a TI field representative.

During normal operation, some circuit components may have case temperatures greater than 85°C. The EVM is designed to operate properly with certain components above 85°C as long as the input and output ranges are maintained. These components include but are not limited to linear regulators, switching transistors, pass transistors, and current sense resistors. These types of devices can be identified using the EVM schematic located in the EVM User's Guide. When placing measurement probes near these devices during operation, please be aware that these devices may be very warm to the touch.

Mailing Address:

Texas Instruments
Post Office Box 655303
Dallas, Texas 75265

Copyright © 2004, Texas Instruments Incorporated

Preface

Read This First

About This Manual

This user's guide describes the TPS2231 HPA074 evaluation module (EVM). This guide contains the EVM schematic, bill of materials, assembly drawing and top and bottom board layouts.

How to Use This Manual

This document contains the following chapters:

- Chapter 1− Introduction
- Chapter 2 − Hardware Overview
- Chapter 3 − EVM Operation
- Chapter 4 – Bill of Materials
- Chapter 5 − EVM Schematic and Layout

Related Documentation From Texas Instruments

TPS2231 ExpressCard™ Power-Interface Switch − data sheet, SLVS536

Trademark

ExpressCard is a trademark of the Personal Computer Memory Card International Association (PCMCIA).

FCC Warning

This equipment is intended for use in a laboratory test environment only. It generates, uses, and can radiate radio frequency energy and has not been tested for compliance with the limits of computing devices pursuant to subpart J of part 15 of FCC rules, which are designed to provide reasonable protection against radio frequency interference. Operation of this equipment in other environments may cause interference with radio communications, in which case

the user at his own expense will be required to take whatever measures may be required to correct this interference.

Contents

1 Introduction 1-1

2 Hardware Overview 2-1

3 EVM Operation 3-1
3.1 Setup 3-2
3.2 Slide Switches 3-2
3.3 Test Points 3-2
3.4 Features 3-3
3.4.1 Input and Output Capacitors 3-3
3.4.2 LEDs 3-3
3.4.3 Clock Oscillator 3-3
3.4.4 ExpressCard Socket 3-3

4 Bill of Materials 4-1
4.1 Bill of Materials 4-2

5 EVM Schematic and Layout 5-1
5.1 Schematic 5-2
5.2 Layout 5-3

Figures

5−1 TPS2231EVM Schematic Diagram 5-2
5−2 Top Assembly Layer 5-3
5−3 Bottom Assembly Layer 5-3

Chapter 1

Introduction

This User's Guide describes the setup and operation of the TPS2231 evaluation module (EVM) HPA074. Information and instruction presented throughout this document assumes user familiarity with the data sheet of the TPS2231 ExpressCard power-interface switch.

Chapter 2

Hardware Overview

The HPA074 EVM features the TPS2231 made by Texas Instruments Incorporated. The EVM has been designed to be simple and straight-forward for users to evaluate the TPS2231 device with all the necessary external components and test points. An ExpressCard compliant socket is installed for insertion of an ExpressCard card.

Chapter 3

EVM Operation

This chapter describes the setup and configuration of the TPS2231 EVM.

Topic **Page**

3.1 Setup 3-2
3.2 Slide Switches 3-2
3.3 Test Points 3-2
3.4 Features 3-3

3.1 Setup

The HPA074 EVM is designed to allow evaluation of the TPS2231 device. Test points and slide switches are provided to facilitate various tests and configurations.

3.2 Slide Switches

On the HPA074 EVM, 6 slide switches (S1 through S6) are provided to set the logic levels on the TPS2231 logic inputs. When the handle of a switch is placed on position 1, the respective TPS2231 input will be pulled up to the AUXIN for S1 to S5 or Hi-Z for S6. If a switch is placed on position 0, the respective logic input will be connected to ground (GND).

Switch Name	Related Signal	Initial Position
S1	$\overline{\text{STBY}}$	1
S2	$\overline{\text{SHDN}}$	1
S3	$\overline{\text{SYSRST}}$	1
S4	$\overline{\text{CPPE}}$	1
S5	$\overline{\text{CPUSB}}$	1
S6	RCLKEN	1

3.3 Test Points

All of the test points on the HPA074 EVM are listed in the following table.

Test Points	Description
TP1, TP11, TP20	Ground (GND)
TP2	Test point for TPS2231 AUXIN pin
TP3	Test point for TPS2231 $\overline{\text{STBY}}$ pin
TP4	Test point for TPS2231 $\overline{\text{SHDN}}$ pin
TP5	Test point for TPS2231 $\overline{\text{SYSRST}}$ pin
TP6	Test point for TPS2231 $\overline{\text{OC}}$ pin
TP7	Test point for TPS2231 AUXOUT pin
TP8	Test point for U2 output pin (inverting output clock)
TP9	Test point for U4 output pin (noninverting output clock)
TP10	Test point for U3 output pin (input clock)
TP12	Test point for TPS2231 3.3VIN pin
TP13	Test point for TPS2231 3.3VOUT pin
TP14	Test point for TPS2231 $\overline{\text{PERST}}$ pin
TP15	Test point for TPS2231 $\overline{\text{CPPE}}$ pin
TP16	Test point for TPS2231 $\overline{\text{CPUSB}}$ pin
TP17	Test point for TPS2231 RCLKEN pin
TP18	Test point for TPS2231 1.5VIN pin
TP19	Test point for TPS2231 1.5VOUT pin

3.4 Features

In order to easily evaluate the TPS2231 PD controller, the EVM features are described in this section.

3.4.1 Input and Output Capacitors

The input capacitances of the TPS2231 voltage inputs are recommended to be at least 4.7 µF. The output capacitances are at least 0.1 µF but greater output capacitance will improve system performance during transients. The ExpressCard specifications defines the total host and card capacitance to be less than 100 µF. The EVM has one 0.1-µF capacitor and a 68-µF capacitor on each of the three voltage outputs.

3.4.2 LEDs

Four LEDs are installed on the HPA074 EVM to indicate the states of the three voltage outputs and the $\overline{OC}$ flag. When there is an overcurrent condition at any of the internal power switches of the TPS2231, D1 will be turned on. If D2 is on, 1.5VOUT is within its regulation range. Similarly, D3 indicates the voltage of AUXOUT, and D4 is for 3.3VOUT.

3.4.3 Clock Oscillator

A 10-MHz clock is generated by U3 and it can be tested at TP10. The RCLKEN signal of the TPS2231, when it is high, will enable drivers (U2 and U4) to have an inverting clock output at TP8 and a noninverting clock output at TP9, and both are passed to the ExpressCard socket at J2.

3.4.4 ExpressCard Socket

An Expresscard compliant card socket J2 is installed. It can be used to evaluate the TPS2231 with an ExpressCard card (not supplied with the HPA074 EVM) inserted.

Chapter 4

Bill of Materials

This chapter contains the bill of materials for the TPS2231EVM.

Topic **Page**

4.1 Bill of Materials 4-2

4.1 Bill of Materials

COUNT	RefDes	Description	Value	Size	Part Number	MFR
3	C1, C2, C3	Capacitor, ceramic, 4.7−µF, 10−V, X7R, 10%	4.7 µF	1206	STD	Taiyo Yuden
6	C4, C5, C6, C7, C9, C11	Capacitor, ceramic, 0.1−µF, 16−V, X7R, 10%	0.1 µF	805	STD	Vishay
3	C8, C10, C12	Capacitor, Poscap, 68 µF, 16V, 20%	68 µF	7343(D)	10TPC68M	Poscap
4	D1, D2, D3, D4	Diode, LED, Red		SMD	LN1271R	Panasonic
1	J1	Header, 10−pin, 200 mil spacing		TH	HPM−10−05−T−S	Samtec
1	J2	Connector		SMD	PX10BSB02	JAE
1	J2	Frame		TH	PX10FS02PH	JAE
1	J3	Header, 6−pin, 200 mil spacing		TH	HPM−06−05−T−S	Samtec
1	Q1	MOSFET, N−ch, 60−V, 115−mA, 1.2−Ω		SOT23	2N7002	Vishay−Liteon
1	Q2	Bipolar, NPN, 40−V, 200−mA, 225−W		SOT23	MMBT3904LT1	On Semi
6	R1, R2, R5, R6, R7, R8	Resistor, chip, 2 kΩ, 1/10−W, 5%	2K	805	Std	Std
2	R3, R4	Resistor, chip, 0 Ω, 1/10−W, 5%	0	805	Std	Std
6	S1, S2, S3, S4, S5, S6	Switch, 1P2T, slide, PC−mount, 200−mA		TH	EG1218	E_Switch
3	TP1, TP11, TP20	Test point, black, 1 mm		TH	240−333	Farnell
17	TP2, TP3, TP4, TP5, TP6, TP7, TP8, TP9, TP10, TP12, TP13, TP14, TP15, TP16, TP17, TP18, TP19	Test point, red, 1 mm		TH	240−345	Farnell
1	U1	IC, TPS2231 ExpressCard power interface		PWP24	TPS2231PWP	TI
1	U2	IC, Single bus buffer gate with 3-state output		DBV	SN74LVC1G240DBV	TI
1	U4	IC, Single bus buffer gate with 3-state output		DBV	SN74LVC1G125DBV	TI
1	U3	Oscillator, 10-MHz, 3.3-V version		SMD	ECS−3953M	ECS
6		Bumbers, clear, polyurethane		SDM	2566	SPC Technology
1	−−	PCB, 6.45 in. × 3.95 in. × 0.062 in.			HPA074A	Any

Notes:
1) These assemblies are ESD sensitive, ESD precautions must be observed.
2) These assemblies must be clean and free from flux and all contaminants. Use of no clean flux is not acceptable.
3) These assemblies must comply with workmanship standards IPC−A−610 Class 2.
4) Reference designators marked with double asterisks (**) cannot be substituted. All other components can be substituted with equivalent manufacturers components.

Chapter 5

EVM Schematic and Layout

This chapter contains the schematic and layout for the TPS2231EVM.

Topic **Page**

5.1 Schematic **5-2**

5.2 Layout **5-3**

5.1 Schematic

Figure 5−1. TPS2231EVM Schematic Diagram

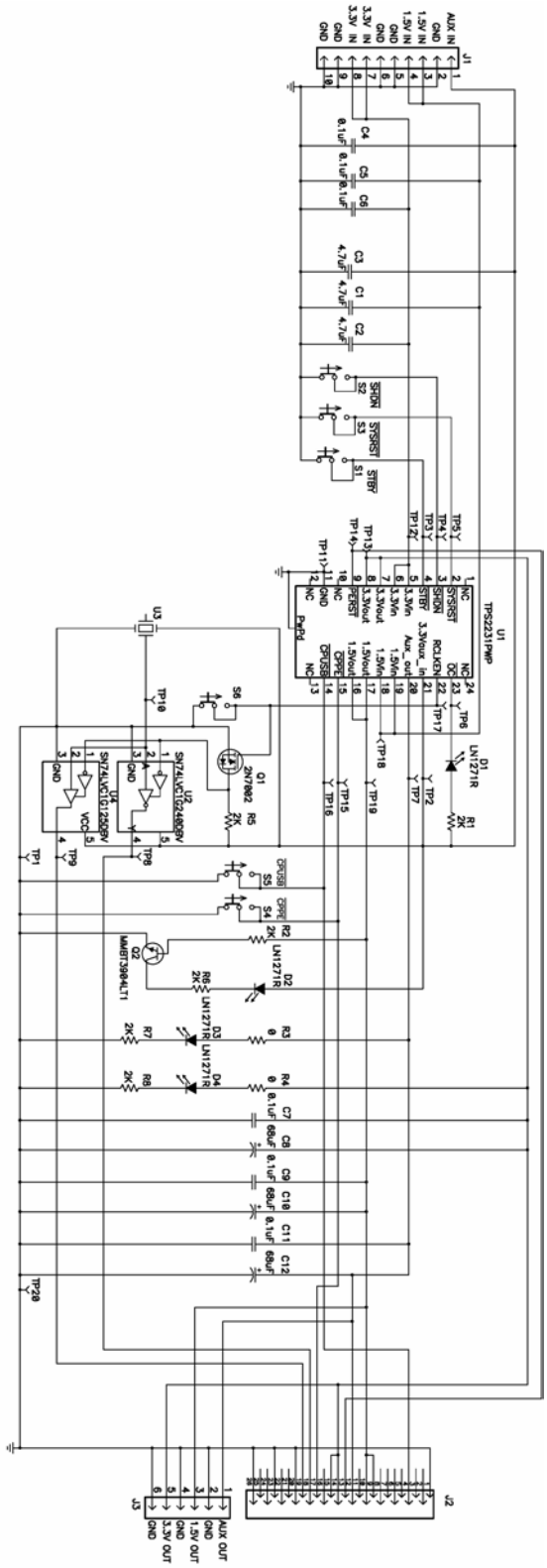

5.2 Layout

Figure 5−2. Top Assembly Layer

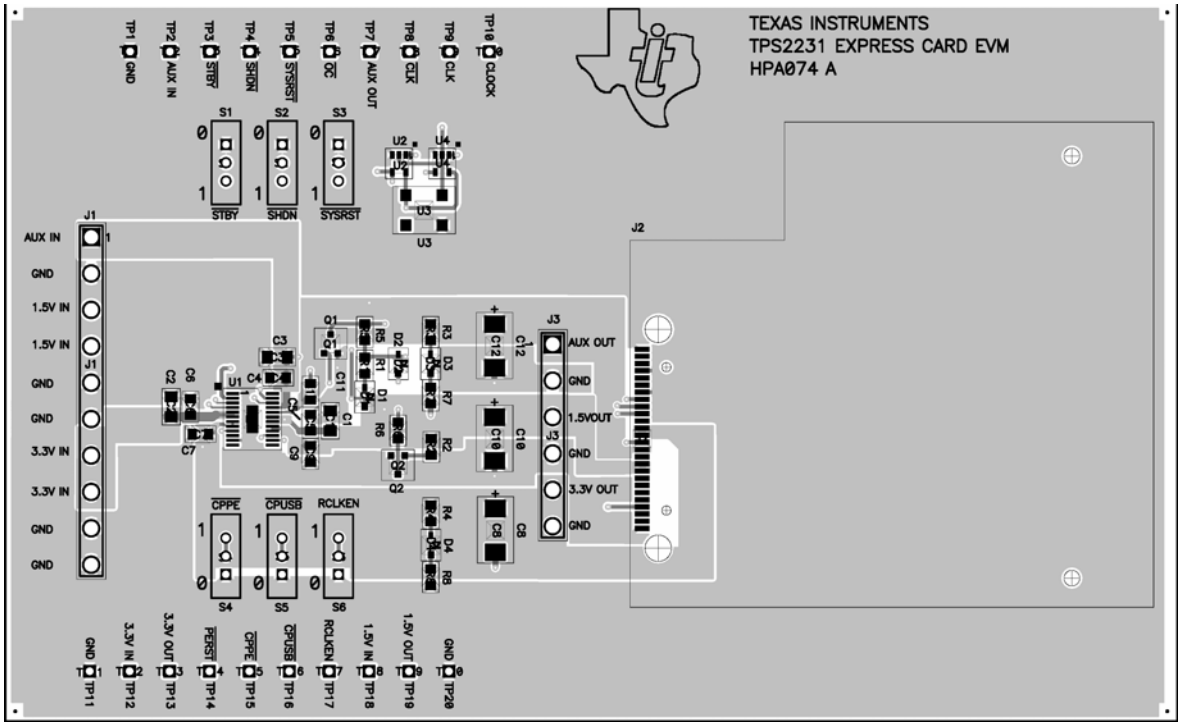
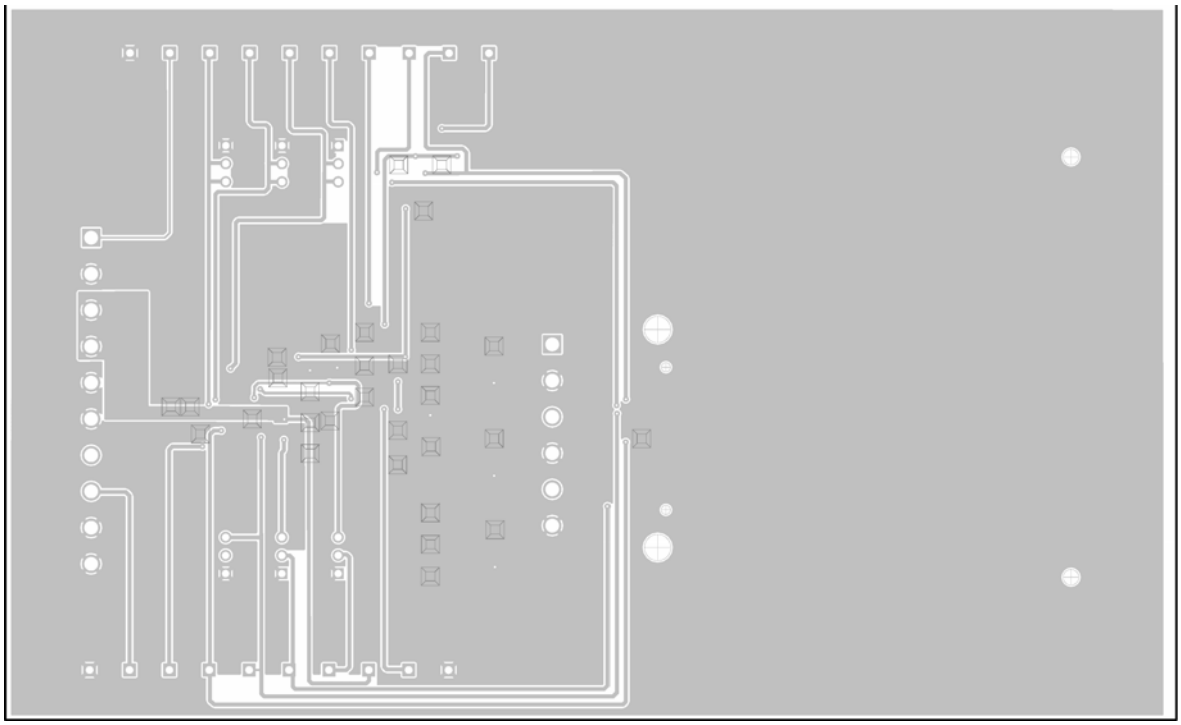
Figure 5−3. Bottom Assembly Layer