User's Guide
SNVA341A–April 2008–Revised April 2013

AN-1837 LM2738 Evaluation Board

1 Introduction

The LM2738 demo board is configured to convert 12V input to 3.3V output at 1.5A load current using the LM2738X 1.6MHz or the LM2738Y 550kHz step down DC-DC regulator. The tiny low profile MSOP-PowerPAD-8 and WSON-8 packages allows the demo board to be manufactured using just over one square inch of a 4-layer printed circuit board.

The circuit is configured with the boost diode connected to V_{OUT}, and according to the data sheet, V_{OUT} must not exceed the maximum operating limit of 5.5V + V_{fD2} using this configuration. This will ensure that the voltage between the Boost and SW pins, V_{BOOST} - V_{SW}, does not exceed 5.5V for proper operation. Please see the *LM2738 550kHz/1.6MHz 1.5A Step-Down DC-DC Switching Regulator* (SNVS556) data sheet for more information regarding this requirement.

A bill of materials describes the parts used on this demo board. A schematic and layout have also been included below along with measured performance characteristics. The schematics at the end of this document show how to re-configure this demo board for various input and output conditions as discussed in the*LM2738 550kHz/1.6MHz 1.5A Step-Down DC-DC Switching Regulator* SNVS556 data sheet. Short or leave open the indicated connection as indicated in the schematics. The above restrictions for the input voltage are valid only for the demo board as shipped with the demo board schematic (see Figure 1).

2 Operating Conditions

V_{IN} = 12V

V_O = 3.3V

I_O = 1.5A

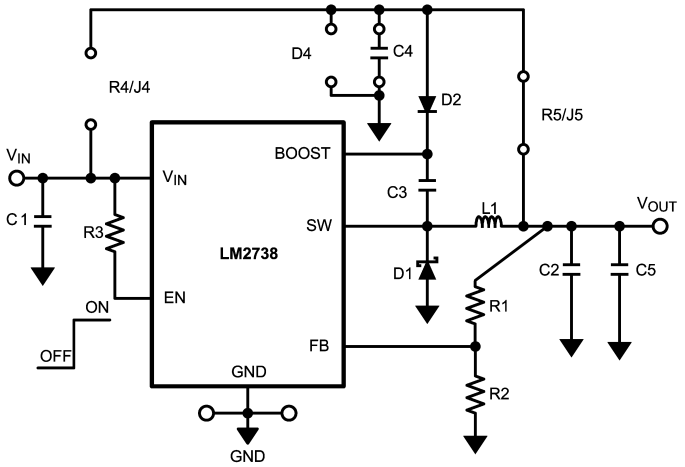

Figure 1. LM2738 Demo Board Schematic - V_{BOOST} derived from V_{OUT} = 3.3V, V_{IN} = 12V

All trademarks are the property of their respective owners.

Copyright © 2008–2013, Texas Instruments Incorporated

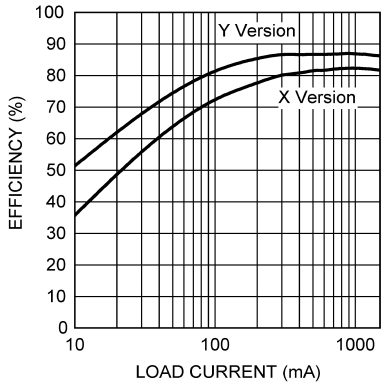

Figure 2. Efficiency vs Load Current - V_{IN} = 12V, V_{OUT} = 3.3V

Table 1. Bill of Materials X-Version (1.6MHz)

Part ID	Part Value	Manufacturer	Part Number	Package Type
C1, Input Cap	10µF, 25V, X7R	TDK	C3216X5R1E106	1206
C2, C5, Output Cap	22µF, 10V, X5R	TDK	C3216X5R1A226	1206
C3 (Boost Cap), C4	0.1µF	TDK	C2012X7R1A104	0805
D2, Boost Diode	$1V_F$ @ 100mA Diode	Diodes, Inc.	BAT54WS-TP	SOD-323
R2, R3	10kΩ, 1%	Vishay	CRCW12061002F	0805
U1	1.5A Buck Regulator	Texas Instruments	LM2738	WSON-8
			LM2738	MSOP-PowerPAD-8
D1, Catch Diode	$0.34V_F$ Schottky 1.5A, 30VR	Toshiba	CRS08	-
L1	5.0µH, 2.9A	Coilcraft	MSS7341-502NL	-
R1	31.6kΩ, 1%	Vishay	CRCW12063162F	0805
R5	0Ω	Vishay	CRCW12060R00F	0805
D4, R4	Open or No Load			

Table 2. Bill of Materials Y-Version (550kHz)

Part ID	Part Value	Manufacturer	Part Number	Package Type
C1, Input Cap	10µF, 25V, X7R	TDK	C3216X5R1E106	1206
C2, C5, Output Cap	22µF, 10V, X5R	TDK	C3216X5R1A226	1206
C3 (Boost Cap), C4	0.1µF	TDK	C2012X7R1A104	0805
D2, Boost Diode	$1V_F$ @ 100mA Diode	Diodes, Inc.	BAT54WS-TP	SOD-323
R2, R3	10kΩ, 1%	Vishay	CRCW12061002F	0805
U1	1.5A Buck Regulator	Texas Instruments	LM2738	WSON-8
			LM2738	MSOP-PowerPAD-8
D1, Catch Diode	$0.34V_F$ Schottky 1.5A, 30VR	Toshiba	CRS08	-
L1	10.0µH, 2.0A	Coilcraft	MSS7341-103NL	-
R1	31.6kΩ, 1%	Vishay	CRCW12063162F	0805
R5	0Ω	Vishay	CRCW12060R00F	0805
D4, R4	Open or No Load			

Copyright © 2008–2013, Texas Instruments Incorporated

Copyright © 2008–2013, Texas Instruments Incorporated

3 PCB Layout - WSON

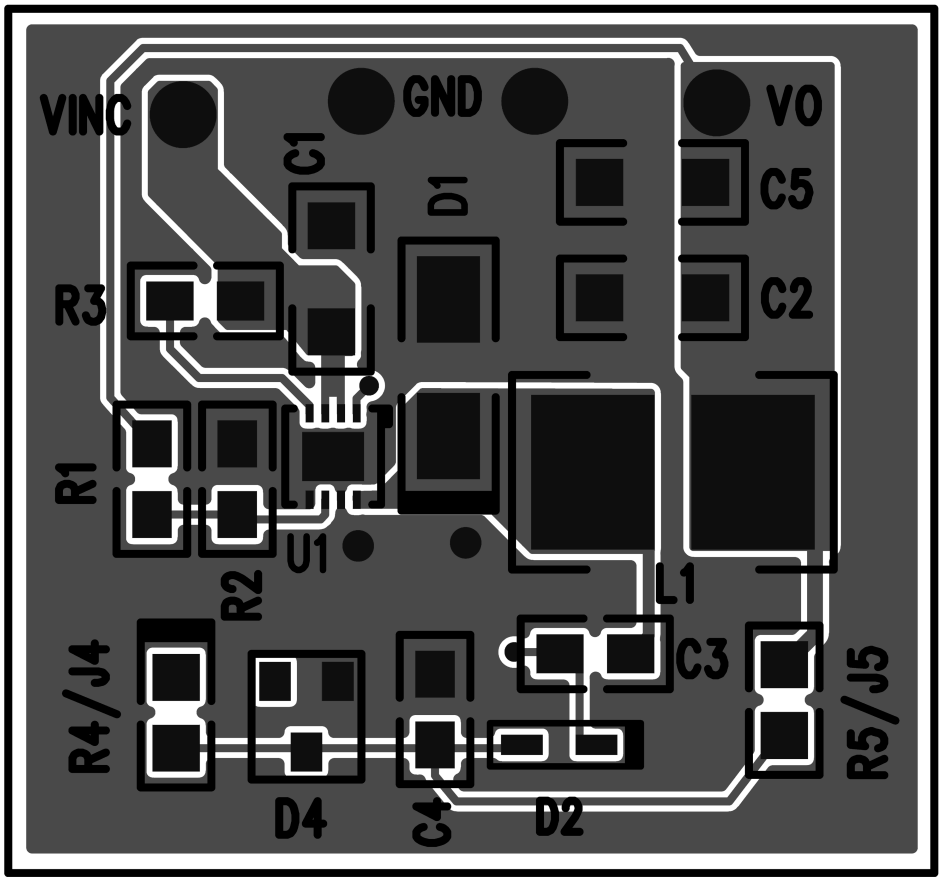

Figure 3. Top Layer

Copyright © 2008–2013, Texas Instruments Incorporated

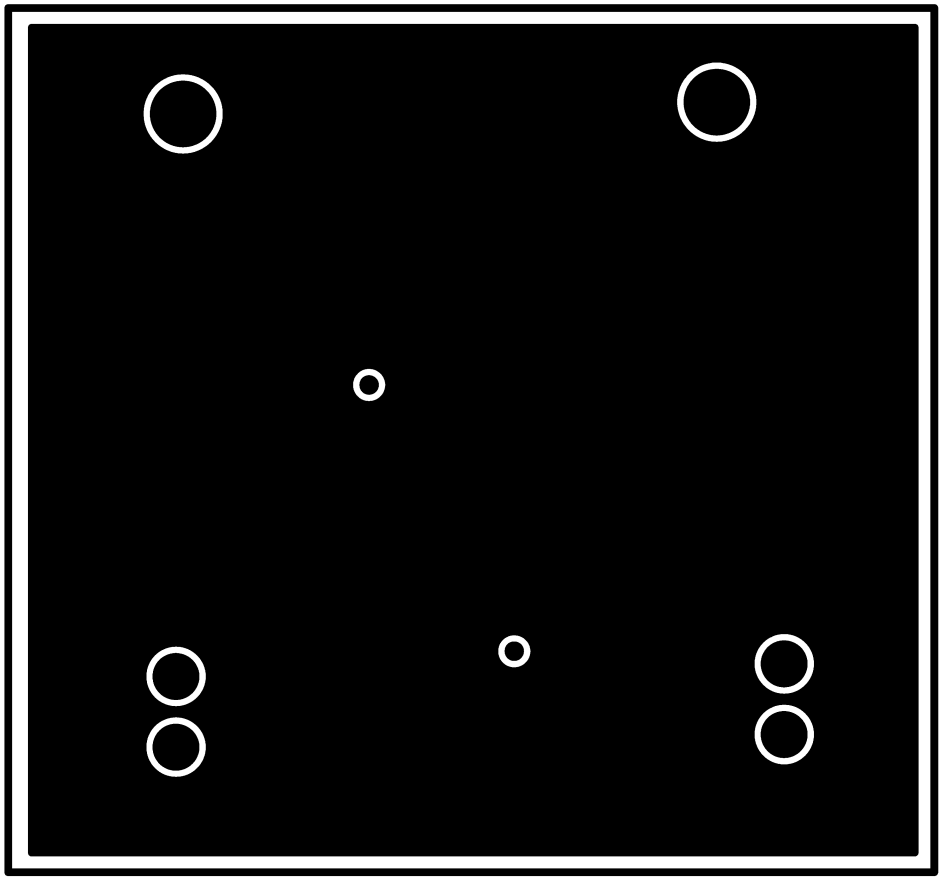

Figure 4. Internal Plane - Layer 2 (GND)

Copyright © 2008–2013, Texas Instruments Incorporated

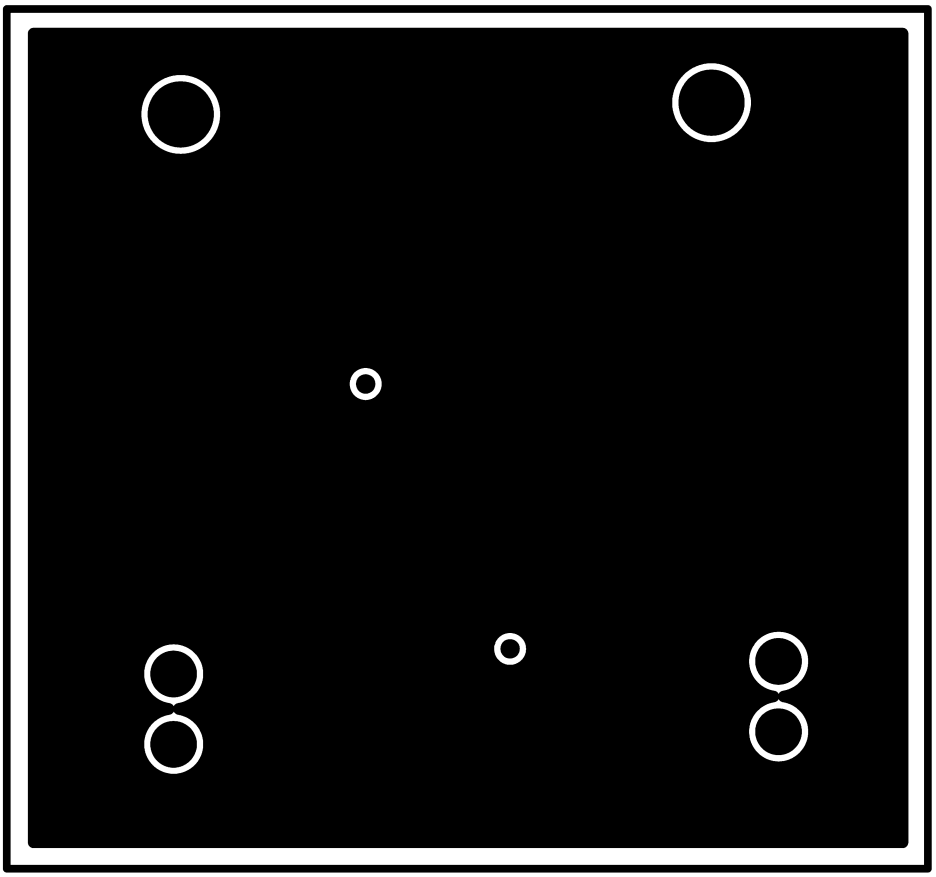

Figure 5. Internal Plane - Layer 3 (GND)

Copyright © 2008–2013, Texas Instruments Incorporated

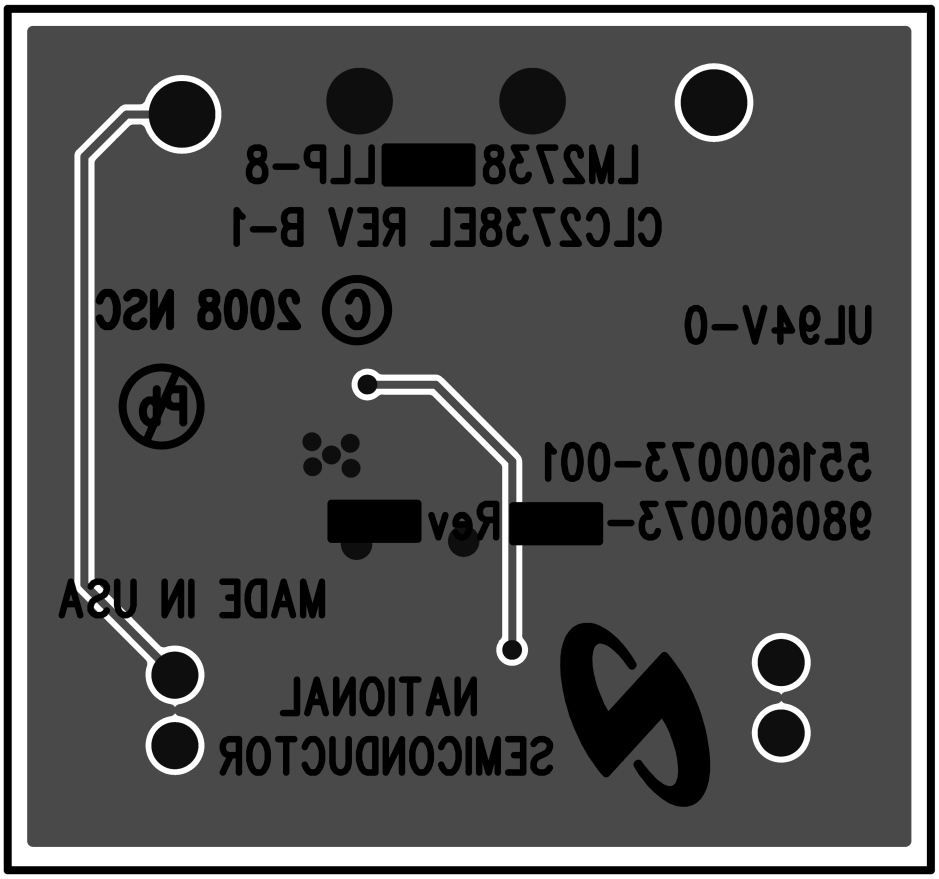

Figure 6. Bottom Layer

Copyright © 2008–2013, Texas Instruments Incorporated

4 PCB Layout - MSOP-PowerPAD

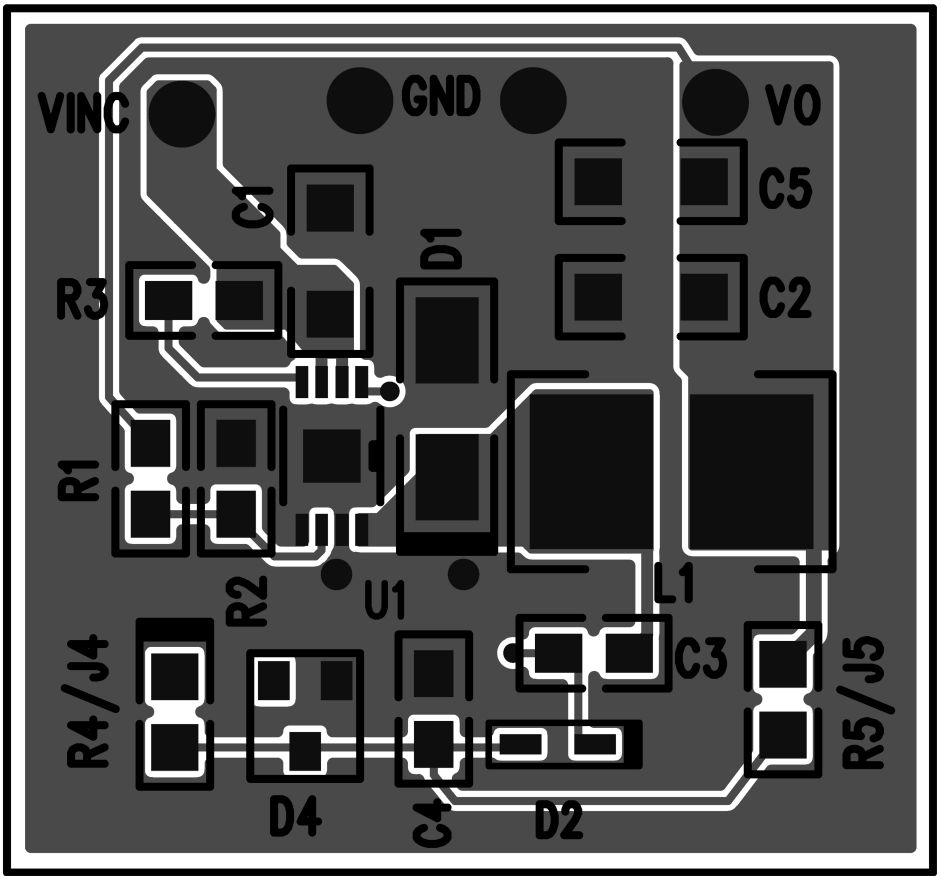

Figure 7. Top Layer

Copyright © 2008–2013, Texas Instruments Incorporated

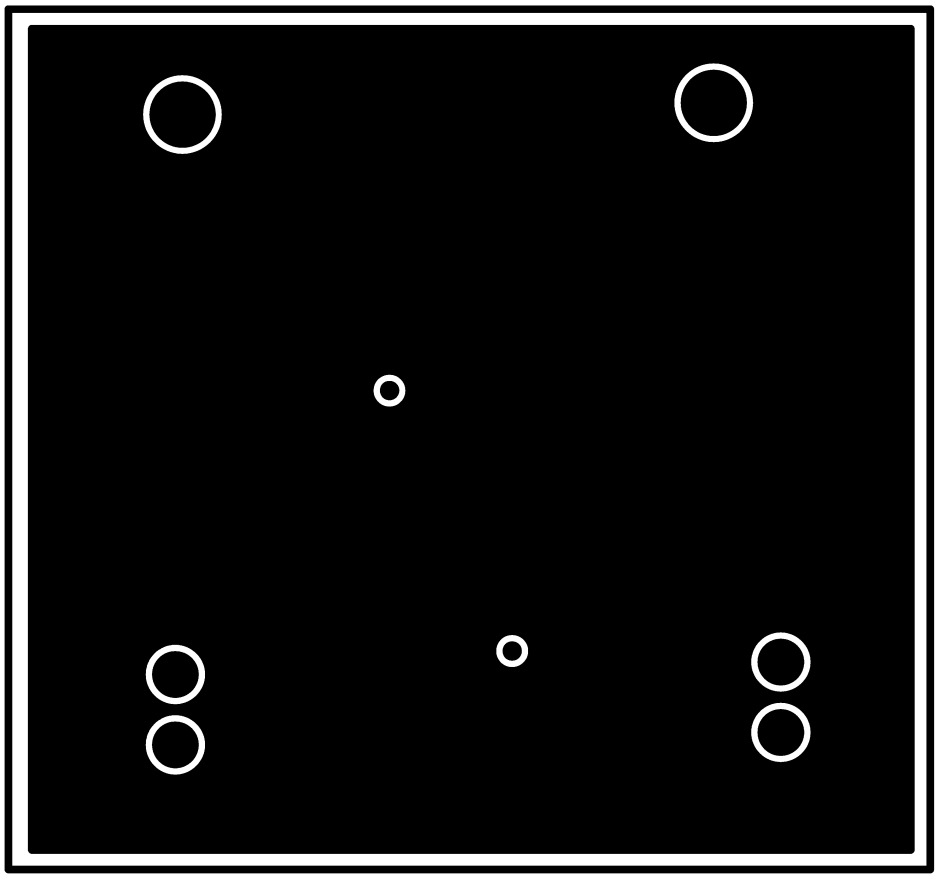

Figure 8. Internal Plane - Layer 2 (GND)

Copyright © 2008–2013, Texas Instruments Incorporated

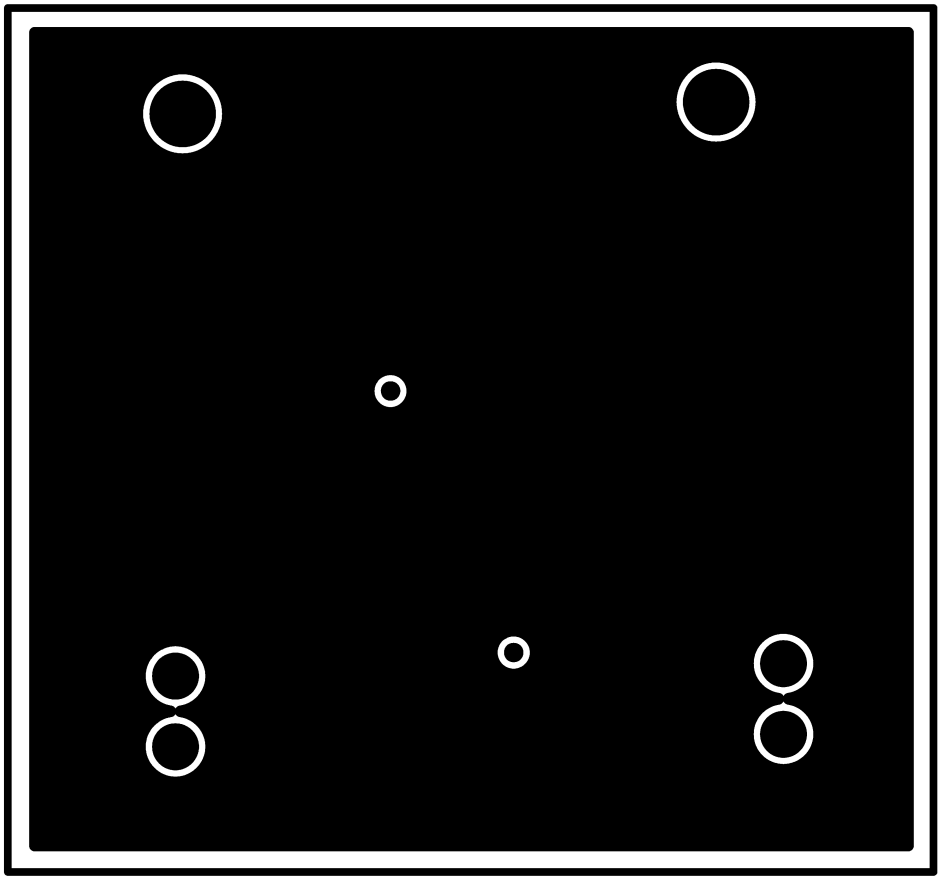

Figure 9. Internal Plane - Layer 3 (GND)

Copyright © 2008–2013, Texas Instruments Incorporated

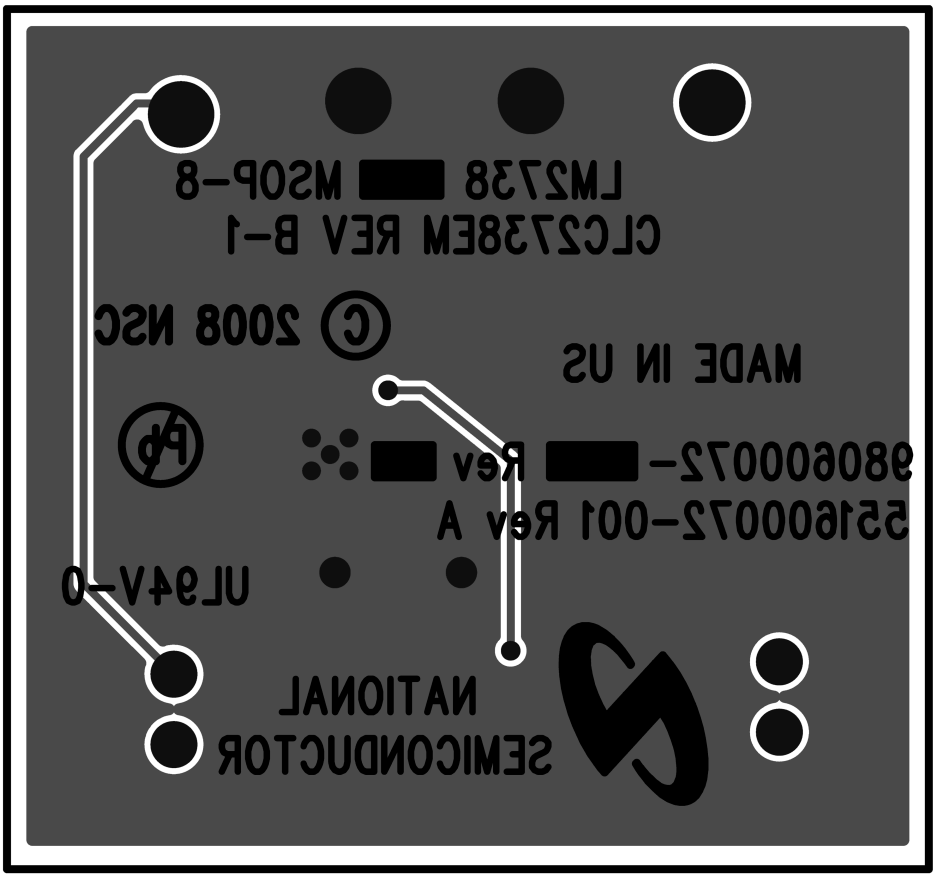

Figure 10. Bottom Layer

5 Additional Circuit Configuration Schematics

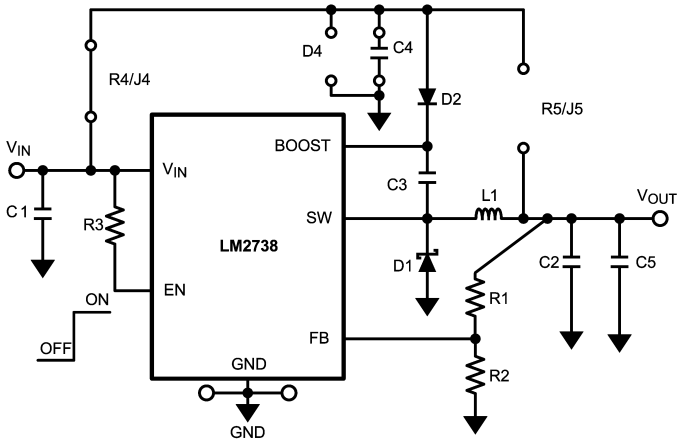

Figure 11. V_{BOOST} derived from V_{IN} = 5V, for V_{OUT} = 1.5V

Copyright © 2008–2013, Texas Instruments Incorporated

Table 3. Bill of Materials X-Version (1.6MHz)

Part ID	Part Value	Manufacturer	Part Number	Package Type
C1, Input Cap	10µF, 25V, X7R	TDK	C3216X5R1E106	1206
C2, Output Cap	22µF, 6.3V, X5R	TDK	C3216X5R0J2266	1206
C3 (Boost Cap), C4	0.1µF	TDK	C2012X7R1A104	0805
D2, Boost Diode	$1V_F$ @ 100mA Diode	Diodes, Inc.	BAT54WS-TP	SOD-323
R2, R3	10kΩ, 1%	Vishay	CRCW12061002F	0805
U1	1.5A Buck Regulator	Texas Instruments	LM2738	WSON-8
			LM2738	MSOP-PowerPAD-8
D1, Catch Diode	$0.34V_F$ Schottky 1.5A, 30V	Toshiba	CRS08	-
L1	2.2µH, 1.9A	Coilcraft	MSS5131-222ML	-
R1	8.87kΩ, 1%	Vishay	CRCW12068871F	0805
R4	0Ω	Vishay	CRCW12060R00F	0805
D4, R5, C5	Open or No Load			

Table 4. Bill of Materials Y-Version (550kHz)

Part ID	Part Value	Manufacturer	Part Number	Package Type
C1, Input Cap	10µF, 25V, X7R	TDK	C3216X5R1E106	1206
C2, C5, Output Caps	22µF, 6.3V, X5R	TDK	C3216X5R0J226	1206
C3 (Boost Cap), C4	0.1µF	TDK	C2012X7R1A104	0805
D2, Boost Diode	$1V_F$ @ 100mA Diode	Diodes, Inc.	BAT54WS-TP	SOD-323
R2, R3	10kΩ, 1%	Vishay	CRCW12061002F	0805
U1	1.5A Buck Regulator	Texas Instruments	LM2738	WSON-8
			LM2738	MSOP-PowerPAD-8
D1, Catch Diode	$0.34V_F$ Schottky 1.5A, 30V	Toshiba	CRS08	-
L1	6.2µH, 2.5A	Coilcraft	MSS7341-622NL	-
R1	8.87kΩ, 1%	Vishay	CRCW12068871F	0805
R4	0Ω	Vishay	CRCW12060R00F	0805
D4, R5	Open or No Load			

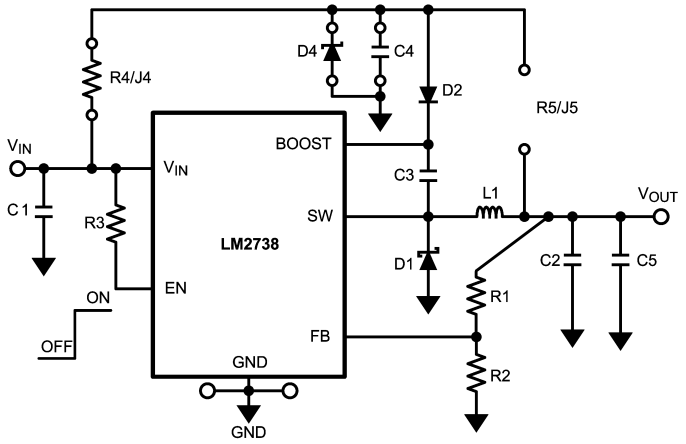

Figure 12. V_{BOOST} derived from V_{SHUNT} coming from V_{IN} = 18V, V_{OUT} = 1.5V

Copyright © 2008–2013, Texas Instruments Incorporated

Table 5. Bill of Materials X-Version (1.6MHz)

Part ID	Part Value	Manufacturer	Part Number	Package Type
C1, Input Cap	10µF, 25V, X7R	TDK	C3216X5R1E106	1206
C2, C5, Output Caps	22µF, 6.3V, X5R	TDK	C3216X5R0J226	1206
C3 (Boost Cap), C4	0.1µF	TDK	C2012X7R1A104	0805
D2, Boost Diode	$1V_F$ @ 100mA Diode	Diodes, Inc.	BAT54WS-TP	SOD-323
D4, Zeneer	5.1V, 200mW	Diodes, Inc.	BZX84C5V1W	SOT-323
R2, R3	10kΩ, 1%	Vishay	CRCW12061002F	0805
U1	1.5A Buck Regulator	Texas Instruments	LM2738	WSON-8
			LM2738	MSOP-PowerPAD-8
D1, Catch Diode	$0.34V_F$ Schottky 1.5A, 30V	Toshiba	CRS08	-
L1	2.7µH, 1.76A	TDK	VLCF5020T-2R7N1R7	-
R1	8.87kΩ, 1%	Vishay	CRCW12068871F	0805
R4	4.12kΩ. 1%	Vishay	CRCW12064121F	0805
R5	Open or No Load			

Table 6. Bill of Materials Y-Version (550kHz)

Part ID	Part Value	Manufacturer	Part Number	Package Type
C1, Input Cap	10µF, 25V, X7R	TDK	C3216X5R1E106	1206
C2, C5, Output Caps	47µF, 6.3V, X5R	TDK	C3216X5R0J476	1206
C3 (Boost Cap), C4	0.1µF	TDK	C2012X7R1A104	0805
D2, Boost Diode	$1V_F$ @ 100mA Diode	Diodes, Inc.	BAT54WS-TP	SOD-323
D4, Zeneer	5.1V, 200mW	Diodes, Inc.	BZX84C5V1W	SOT-323
R2, R3	10kΩ, 1%	Vishay	CRCW12061002F	0805
U1	1.5A Buck Regulator	Texas Instruments	LM2738	WSON-8
			LM2738	MSOP-PowerPAD-8
D1, Catch Diode	$0.34V_F$ Schottky 1.5A, 30V	Toshiba	CRS08	-
L1	8.7µH, 2.2A	Coilcraft	MSS7341-872NL	-
R1	8.87kΩ, 1%	Vishay	CRCW12068871F	0805
R4	4.21kΩ, 1%	Vishay	CRCW12064211F	0805
R5	Open or No Load			

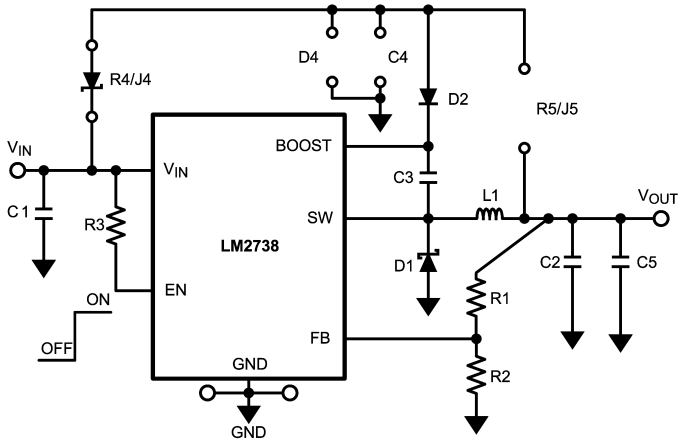

Figure 13. V_{BOOST} derived from Series Zener Diode from V_{IN} = 15V, V_{OUT} = 1.5V

Copyright © 2008–2013, Texas Instruments Incorporated

Table 7. Bill of Materials X-Version (1.6MHz)

Part ID	Part Value	Manufacturer	Part Number	Package Type
C1, Input Cap	10µF, 25V, X7R	TDK	C3216X5R1E106	1206
C2, C5, Output Caps	22µF, 6.3V, X5R	TDK	C3216X5R0J226	1206
C3 (Boost Cap)	0.1µF	TDK	C2012X7R1A104	0805
D2, Boost Diode	$1V_F$ @ 100mA Diode	Diodes, Inc.	BAT54WS-TP	SOD-323
R2, R3	10kΩ, 1%	Vishay	CRCW12061002F	0805
U1	1.5A Buck Regulator	Texas Instruments	LM2738	WSON-8
			LM2738	MSOP-PowerPAD-8
D1, Catch Diode	$0.34V_F$ Schottky 1.5A, 30V	Toshiba	CRS08	-
L1	3.3µH, 3.5A	Coilcraft	MSS7341-332NL	-
R1	8.87kΩ, 1%	Vishay	CRCW12068871F	0805
R4	11V, 200mW, Zener	Vishay	BZX384C11-V	SOD-323
D4, R5, C4	Open or No Load			

Table 8. Bill of Materials Y-Version (550kHz)

Part ID	Part Value	Manufacturer	Part Number	Package Type
C1, Input Cap	10µF, 25V, X7R	TDK	C3216X5R1E106	1206
C2, C5, Output Caps	47µF, 6.3V, X5R	TDK	C3216X5R0J476	1206
C3 (Boost Cap)	0.1µF	TDK	C2012X7R1A104	0805
D2, Boost Diode	$1V_F$ @ 100mA Diode	Diodes, Inc.	BAT54WS-TP	SOD-323
R2, R3	10kΩ, 1%	Vishay	CRCW12061002F	0805
U1	1.5A Buck Regulator	Texas Instruments	LM2738	WSON-8
			LM2738	MSOP-PowerPAD-8
D1, Catch Diode	$0.34V_F$ Schottky 1.5A, 30V	Toshiba	CRS08	-
L1	8.7µH, 2.2A	Coilcraft	MSS7341-872NL	-
R1	8.87kΩ, 1%	Vishay	CRCW12068871F	0805
R4	11V, 200mW, Zener	Vishay	BZX384C11-V	SOD-323
D4, R5, C4	Open or No Load			

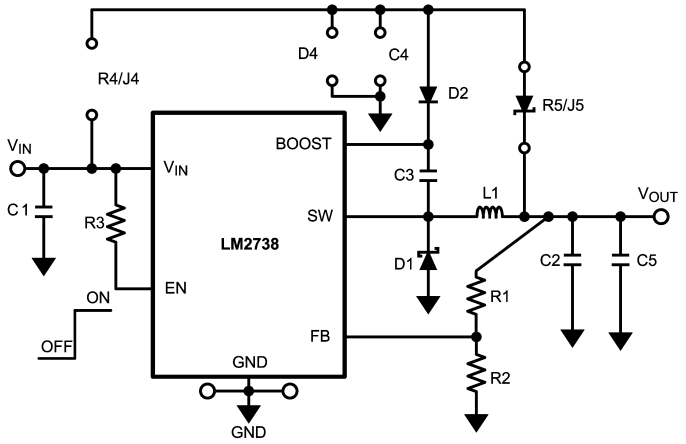

Figure 14. V_{BOOST} derived from Series Zener Diode from V_{OUT} = 9V, V_{IN} = 15V

Copyright © 2008–2013, Texas Instruments Incorporated

Table 9. Bill of Materials X-Version (1.6MHz)

Part ID	Part Value	Manufacturer	Part Number	Package Type
C1, Input Cap	10µF, 25V, X7R	TDK	C3216X5R1E106	1206
C2, Output Cap	22µF, 10V, X5R	TDK	C3216X5R1A226	1206
C3 (Boost Cap), C4	0.1µF	TDK	C2012X7R1A104	0805
D2, Boost Diode	$1V_F$ @ 100mA Diode	Diodes, Inc.	BAT54WS-TP	SOD-323
R2, R3	10kΩ, 1%	Vishay	CRCW12061002F	0805
U1	1.5A Buck Regulator	Texas Instruments	LM2738	WSON-8
			LM2738	MSOP-PowerPAD-8
D1, Catch Diode	$0.34V_F$ Schottky 1.5A, 30V	Toshiba	CRS08	-
L1	6.2µH, 2.5A	Coilcraft	MSS7341-622NL	-
R1	102kΩ, 1%	Vishay	CRCW1206123F	0805
R5	4.3V, 200mW, Zener	Vishay	BZX384C4V3-V	SOD-323
D4, R4	Open or No Load			

Table 10. Bill of Materials Y-Version (550kHz)

Part ID	Part Value	Manufacturer	Part Number	Package Type
C1, Input Cap	10µF, 25V, X7R	TDK	C3216X5R1E106	1206
C2, Output Cap	22µF, 10V, X5R	TDK	C3216X5R1A226	1206
C3 (Boost Cap), C4	0.1µF	TDK	C2012X7R1A104	0805
D2, Boost Diode	$1V_F$ @ 100mA Diode	Diodes, Inc.	BAT54WS-TP	SOD-323
R2, R3	10kΩ, 1%	Vishay	CRCW12061002F	0805
U1	1.5A Buck Regulator	Texas Instruments	LM2738	WSON-8
			LM2738	MSOP-PowerPAD-8
D1, Catch Diode	$0.34V_F$ Schottky 1.5A, 30V	Toshiba	CRS08	-
L1	5.0µH, 2.9A	Coilcraft	MSS7341-502NL	-
R1	102kΩ, 1%	Vishay	CRCW12061023F	0805
R5	4.3V, 200mW, Zener	Vishay	BZX384C4V3-V	SOD-323
D4, R4	Open or No Load			

Copyright © 2008–2013, Texas Instruments Incorporated

IMPORTANT NOTICE

Texas Instruments Incorporated and its subsidiaries (TI) reserve the right to make corrections, enhancements, improvements and other changes to its semiconductor products and services per JESD46, latest issue, and to discontinue any product or service per JESD48, latest issue. Buyers should obtain the latest relevant information before placing orders and should verify that such information is current and complete. All semiconductor products (also referred to herein as “components”) are sold subject to TI’s terms and conditions of sale supplied at the time of order acknowledgment.

TI warrants performance of its components to the specifications applicable at the time of sale, in accordance with the warranty in TI’s terms and conditions of sale of semiconductor products. Testing and other quality control techniques are used to the extent TI deems necessary to support this warranty. Except where mandated by applicable law, testing of all parameters of each component is not necessarily performed.

TI assumes no liability for applications assistance or the design of Buyers’ products. Buyers are responsible for their products and applications using TI components. To minimize the risks associated with Buyers’ products and applications, Buyers should provide adequate design and operating safeguards.

TI does not warrant or represent that any license, either express or implied, is granted under any patent right, copyright, mask work right, or other intellectual property right relating to any combination, machine, or process in which TI components or services are used. Information published by TI regarding third-party products or services does not constitute a license to use such products or services or a warranty or endorsement thereof. Use of such information may require a license from a third party under the patents or other intellectual property of the third party, or a license from TI under the patents or other intellectual property of TI.

Reproduction of significant portions of TI information in TI data books or data sheets is permissible only if reproduction is without alteration and is accompanied by all associated warranties, conditions, limitations, and notices. TI is not responsible or liable for such altered documentation. Information of third parties may be subject to additional restrictions.

Resale of TI components or services with statements different from or beyond the parameters stated by TI for that component or service voids all express and any implied warranties for the associated TI component or service and is an unfair and deceptive business practice. TI is not responsible or liable for any such statements.

Buyer acknowledges and agrees that it is solely responsible for compliance with all legal, regulatory and safety-related requirements concerning its products, and any use of TI components in its applications, notwithstanding any applications-related information or support that may be provided by TI. Buyer represents and agrees that it has all the necessary expertise to create and implement safeguards which anticipate dangerous consequences of failures, monitor failures and their consequences, lessen the likelihood of failures that might cause harm and take appropriate remedial actions. Buyer will fully indemnify TI and its representatives against any damages arising out of the use of any TI components in safety-critical applications.

In some cases, TI components may be promoted specifically to facilitate safety-related applications. With such components, TI’s goal is to help enable customers to design and create their own end-product solutions that meet applicable functional safety standards and requirements. Nonetheless, such components are subject to these terms.

No TI components are authorized for use in FDA Class III (or similar life-critical medical equipment) unless authorized officers of the parties have executed a special agreement specifically governing such use.

Only those TI components which TI has specifically designated as military grade or “enhanced plastic” are designed and intended for use in military/aerospace applications or environments. Buyer acknowledges and agrees that any military or aerospace use of TI components which have ***not*** been so designated is solely at the Buyer's risk, and that Buyer is solely responsible for compliance with all legal and regulatory requirements in connection with such use.

TI has specifically designated certain components as meeting ISO/TS16949 requirements, mainly for automotive use. In any case of use of non-designated products, TI will not be responsible for any failure to meet ISO/TS16949.

Products		**Applications**	
Audio	www.ti.com/audio	Automotive and Transportation	www.ti.com/automotive
Amplifiers	amplifier.ti.com	Communications and Telecom	www.ti.com/communications
Data Converters	dataconverter.ti.com	Computers and Peripherals	www.ti.com/computers
DLP® Products	www.dlp.com	Consumer Electronics	www.ti.com/consumer-apps
DSP	dsp.ti.com	Energy and Lighting	www.ti.com/energy
Clocks and Timers	www.ti.com/clocks	Industrial	www.ti.com/industrial
Interface	interface.ti.com	Medical	www.ti.com/medical
Logic	logic.ti.com	Security	www.ti.com/security
Power Mgmt	power.ti.com	Space, Avionics and Defense	www.ti.com/space-avionics-defense
Microcontrollers	microcontroller.ti.com	Video and Imaging	www.ti.com/video
RFID	www.ti-rfid.com		
OMAP Applications Processors	www.ti.com/omap	**TI E2E Community**	e2e.ti.com
Wireless Connectivity	www.ti.com/wirelessconnectivity		

Mailing Address: Texas Instruments, Post Office Box 655303, Dallas, Texas 75265
Copyright © 2013, Texas Instruments Incorporated