USB Connector + Power Supply

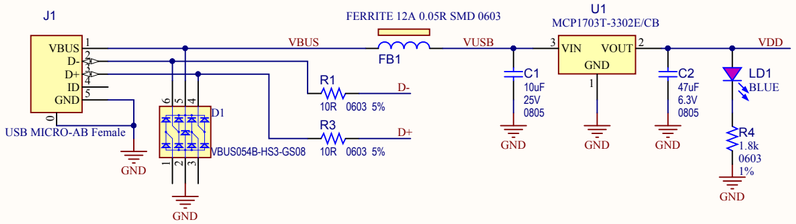

Series Resistors for Touch-RX-Channels

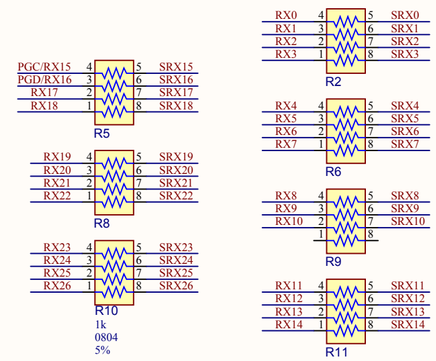

Touchpanel Interface

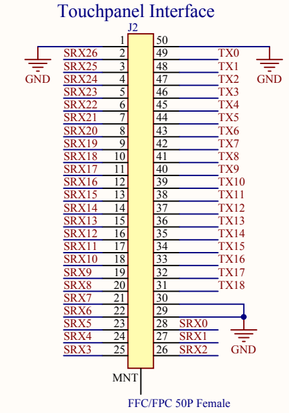

Touch Controller

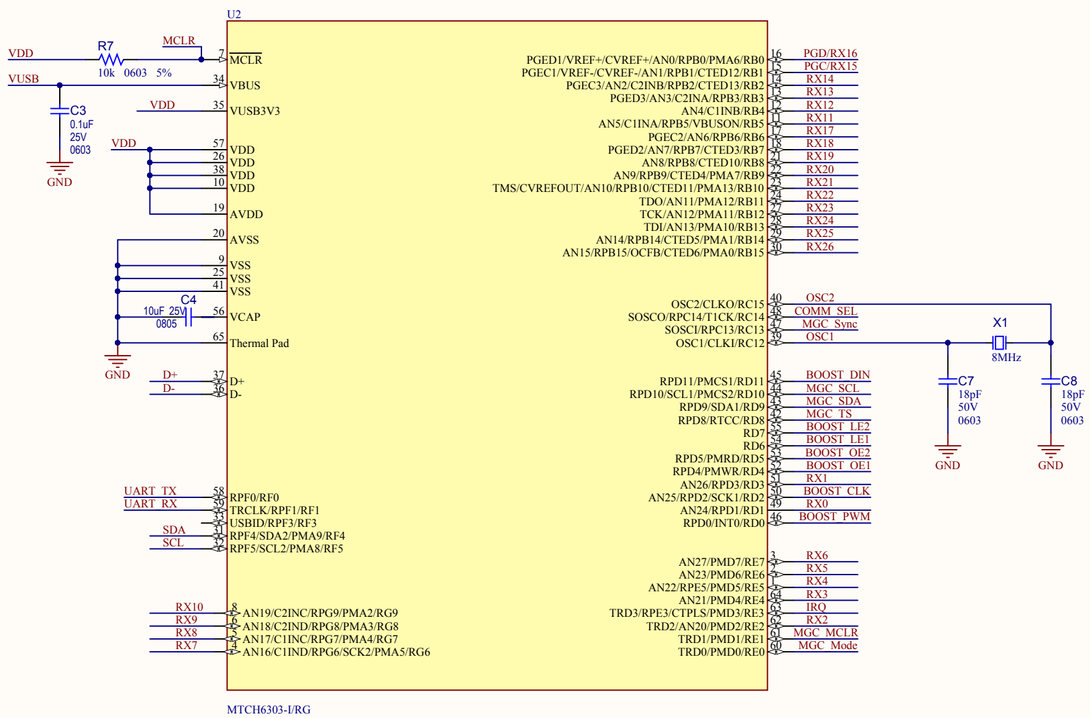

PCAP Voltage Booster

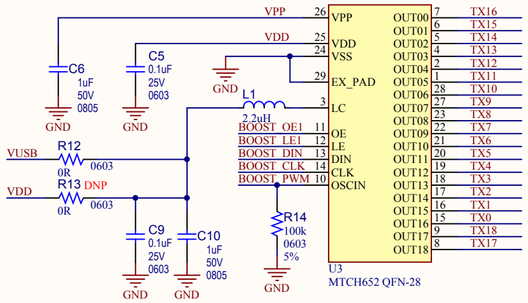

I2C Port

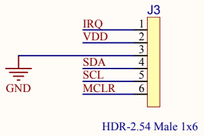

ICSP

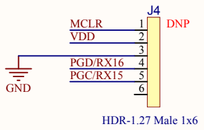

GestIC-Electrode Connector

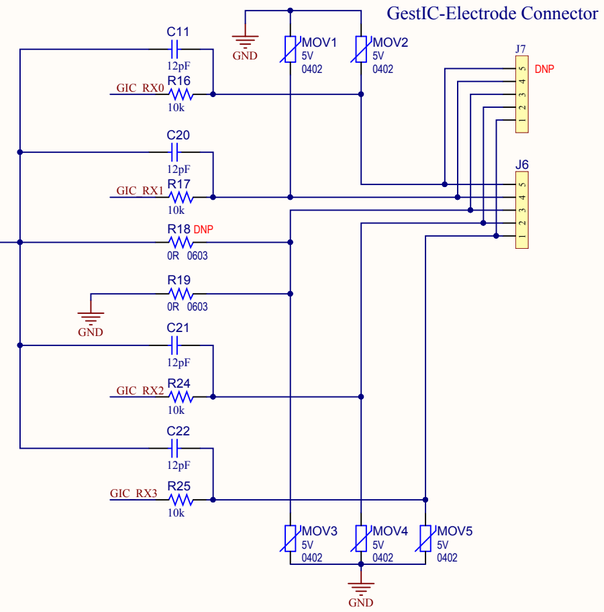

GestIC Chip and Electrode Connector

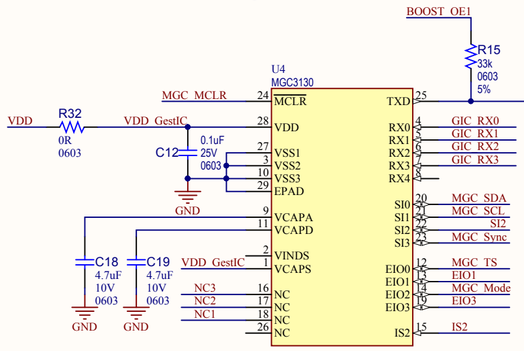

PIC Decoupling Caps

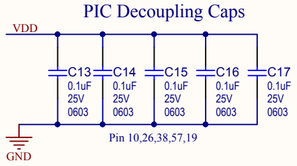

GestIC Interface

keep PIC in Reset, when connecting with I2C bridge (J4: MCLR-GND)

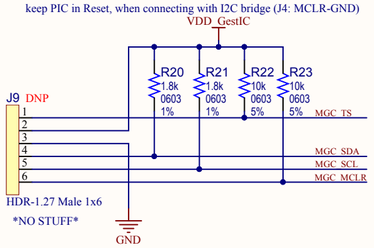

Test Points

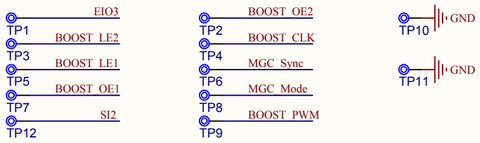

Communication Select

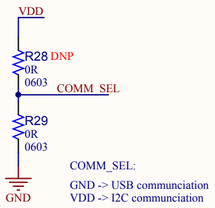

GestIC Interface Selection

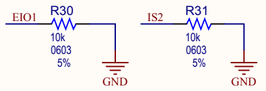

J8, J10, J11: Improve mechanical stability

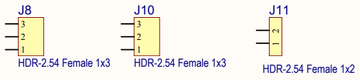

DNP: Do Not Populate

Drawn By: m91470	MICROCHIP
Engineer: m91470	
PartNumber: DV102014	Project Title: *DV102014 Development Kit*
Sheet Title: Schematic of DV102014 electronic unit	Designed with Altium
Size C / Sch #:03-10463 / Revision:1	Date: 12.11.2015 17:42:18 / Sheet 1 of 1
File: Schematic03-10463.SchDoc	Altium.com