OPA1622 SoundPlus™ High-Fidelity, Bipolar-Input, Audio Operational Amplifier

1 Features

- High-Fidelity Sound Quality
- Ultralow Noise: 2.8 nV/√Hz at 1 kHz
- Ultralow Total Harmonic Distortion + Noise: –119 dB THD+N (142 mW/Ch into 32 Ω/Ch)
- Wide Gain Bandwidth Product: 32 MHz (G = +1000)
- High Slew Rate: 10 V/µs
- High Capacitive-Load Drive Capability: > 600 pF
- High Open-Loop Gain: 136 dB (600-Ω Load)
- Low Quiescent Current: 2.6 mA per Channel
- Low-Power Shutdown Mode With Reduced Pop and Click Noise: 5 µA per Channel
- Short-Circuit Protection
- Wide Supply Range: ±2 V to ±18 V
- Available in small VSON-10 µPackage

2 Applications

- High-Fidelity (HiFi) Headphone Drivers
- Professional Audio Equipment
- Analog and Digital Mixing Consoles
- Audio Test and Measurement
- High-End Blu-ray™ Players
- High-End Audio and Video (A/V) Receivers

3 Description

The OPA1622, dual, bipolar-input, SoundPlus™ audio operational amplifier achieves a very low, 2.8-nV/√Hz noise density with an ultralow THD+N of –119.2 dB at 1 kHz and drives a 32-Ω load at 100-mW output power. The OPA1622 offers extremely-high ac PSRR and CMRR specifications that eliminate noise from power supplies, making the OPA1622 ideal for use in portable-audio applications. This device also has a high output-drive capability of +145 mA per –130 mA.

The OPA1622 operates over a very wide supply range of ±2 V to ±18 V, on only 2.6 mA of supply current per channel. The OPA1622 op amp is unity-gain stable and provides excellent dynamic behavior over a wide range of load conditions. The OPA1622 includes a shutdown mode, allowing the amplifiers to be switched from normal operation to a standby current that is typically less than 5 µA. This shutdown feature is specifically designed to eliminate click and pop noise when transitioning into or out of shutdown mode.

The OPA1622 features a unique internal layout for lowest crosstalk, and freedom from interactions between channels, even when overdriven or overloaded. This device is specified from –40°C to +125°C.

Device Information(1)

PART NUMBER	PACKAGE	BODY SIZE (NOM)
OPA1622	VSON (10)	3.00 mm × 3.00 mm

(1) For all available packages, see the package option addendum at the end of the datasheet.

OPA1622 in a High-Fidelity Headphone Driver Application

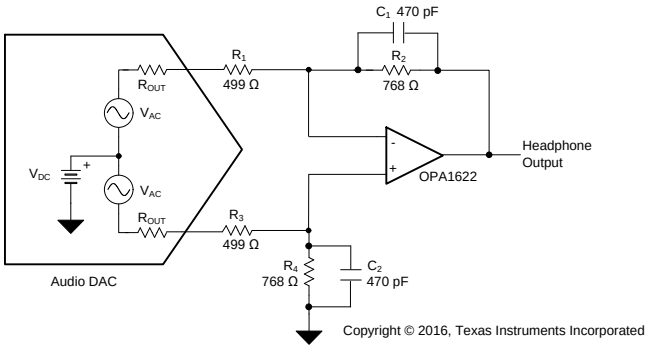

FFT: 1 kHz, 32-Ω Load, 50 mW

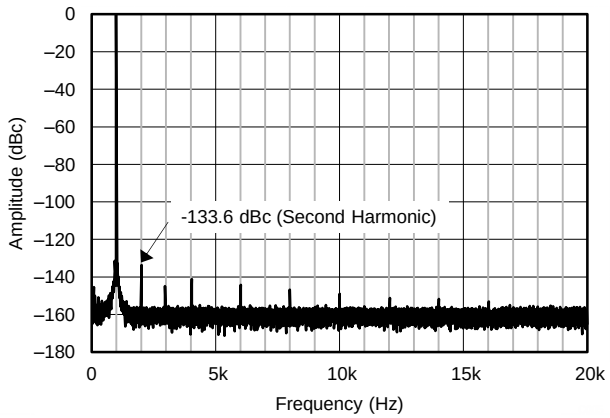

An IMPORTANT NOTICE at the end of this data sheet addresses availability, warranty, changes, use in safety-critical applications, intellectual property matters and other important disclaimers. PRODUCTION DATA.

Table of Contents

1 Features ... 1
2 Applications ... 1
3 Description ... 1
4 Revision History ... 2
5 Pin Configuration and Functions ... 3
6 Specifications ... 4
6.1 Absolute Maximum Ratings ... 4
6.2 ESD Ratings ... 4
6.3 Recommended Operating Conditions ... 4
6.4 Thermal Information ... 4
6.5 Electrical Characteristics: ... 5
6.6 Typical Characteristics ... 7
7 Detailed Description ... 14
7.1 Overview ... 14
7.2 Functional Block Diagram ... 14
7.3 Feature Description ... 14
7.4 Device Functional Modes ... 17
8 Application and Implementation ... 19
8.1 Application Information ... 19
8.2 Typical Application ... 22
9 Power Supply Recommendations ... 26
10 Layout ... 26
10.1 Layout Guidelines ... 26
10.2 Layout Example ... 26
11 Device and Documentation Support ... 27
11.1 Device Support ... 27
11.2 Documentation Support ... 27
11.3 Community Resources ... 27
11.4 Trademarks ... 27
11.5 Electrostatic Discharge Caution ... 28
11.6 Glossary ... 28
12 Mechanical, Packaging, and Orderable Information ... 28

4 Revision History

Changes from Revision A (November 2015) to Revision B	Page
• Added TI Design	1
• Changed pin number of V+ pin in *Pin Functions* table	3
• Changed format of *Supply voltage* parameter in *Recommended Operating Conditions* table	4

Changes from Original (November 2015) to Revision A	Page
• Changed from product preview to production data	1

Copyright © 2015–2016, Texas Instruments Incorporated

5 Pin Configuration and Functions

DRC Package
10-Pin VSON
Top View

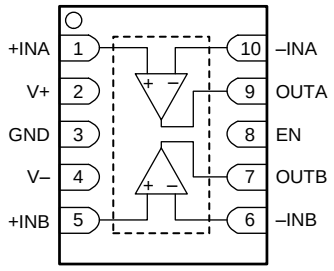

Pin Functions

PIN		I/O	DESCRIPTION
NAME	NO.		
GND	3	—	Connect to ground
EN	8	I	Shutdown (logic low), enable (logic high)
+IN A	1	I	Noninverting input, channel A
–IN A	10	I	Inverting input, channel A
+IN B	5	I	Noninverting input, channel B
–IN B	6	I	Inverting input, channel B
OUT A	9	O	Output, channel A
OUT B	7	O	Output, channel B
V+	2	—	Positive (highest) power supply
V–	4	—	Negative (lowest) power supply
Thermal pad			Exposed thermal die pad on underside; connect thermal die pad to V–. Soldering the thermal pad improves heat dissipation and provides specified performance.

Copyright © 2015–2016, Texas Instruments Incorporated

6 Specifications

6.1 Absolute Maximum Ratings

over operating free-air temperature range (unless otherwise noted)[1]

		MIN	MAX	UNIT
Voltage	Supply voltage, V_S = (V+) – (V–)		40	V
	Input voltage (signal inputs, enable, ground)	(V–) – 0.5	(V+) + 0.5	
	Input differential voltage		±0.5	
Current	Input current (all pins except power-supply pins)		±10	mA
	Output short-circuit[2]	Continuous		
Temperature	Operating, T_A	–55	125	°C
	Junction, T_J		200	
	Storage, T_{stg}	–65	150	

(1) Stresses beyond those listed under *Absolute Maximum Ratings* may cause permanent damage to the device. These are stress ratings only, which do not imply functional operation of the device at these or any other conditions beyond those indicated under *Recommended Operating Conditions*. Exposure to absolute-maximum-rated conditions for extended periods may affect device reliability.
(2) Short-circuit to V_S / 2 (ground in symmetrical dual supply setups), one amplifier per package.

6.2 ESD Ratings

			VALUE	UNIT
$V_{(ESD)}$	Electrostatic discharge	Human-body model (HBM), per ANSI/ESDA/JEDEC JS-001[1]	±4000	V
		Charged-device model (CDM), per JEDEC specification JESD22-C101[2]	±1500	

(1) JEDEC document JEP155 states that 500-V HBM allows safe manufacturing with a standard ESD control process.
(2) JEDEC document JEP157 states that 250-V CDM allows safe manufacturing with a standard ESD control process.

6.3 Recommended Operating Conditions

over operating free-air temperature range (unless otherwise noted)

		MIN	NOM	MAX	UNIT
Supply voltage, (V+) – (V–)	Single-supply	4		36	V
	Dual-supply	±2		±18	
Specified temperature		–40		125	°C

6.4 Thermal Information

THERMAL METRIC[1]		OPA1622 DRC (SON) 10 PINS	UNIT
$R_{\theta JA}$	Junction-to-ambient thermal resistance	47.6	°C/W
$R_{\theta JC(top)}$	Junction-to-case (top) thermal resistance	58.1	°C/W
$R_{\theta JB}$	Junction-to-board thermal resistance	22.0	°C/W
ψ_{JT}	Junction-to-top characterization parameter	0.9	°C/W
ψ_{JB}	Junction-to-board characterization parameter	22.2	°C/W
$R_{\theta JC(bot)}$	Junction-to-case (bottom) thermal resistance	4.1	°C/W

(1) For more information about traditional and new thermal metrics, see the *IC Package Thermal Metrics* application report, SPRA953.

Copyright © 2015–2016, Texas Instruments Incorporated

6.5 Electrical Characteristics:

at T_A = +25°C, V_S = ±2 V to ±18 V, V_{CM} = V_{OUT} = midsupply, and R_L = 1 kΩ (unless otherwise noted)

PARAMETER		TEST CONDITIONS	MIN	TYP	MAX	UNIT
AUDIO PERFORMANCE						
THD+N	Total harmonic distortion + noise	G = 1, f = 1 kHz, V_{OUT} = 3.5 V_{RMS}, R_L = 2 kΩ, 80-kHz measurement bandwidth		0.000024%		
				–132		dB
		G = 1, f = 1 kHz, V_{OUT} = 3.5 V_{RMS}, R_L = 600 Ω, 80-kHz measurement bandwidth		0.000025%		
				–132		dB
		G = 1, f = 1 kHz, P_{OUT} = 10 mW, R_L = 128 Ω, 80-kHz measurement bandwidth		0.000071%		
				–123		dB
		G = 1, f = 1 kHz, P_{OUT} = 10 mW, R_L = 32 Ω, 80-kHz measurement bandwidth		0.000149%		
				–116		dB
		G = 1, f = 1 kHz, P_{OUT} = 10 mW, R_L = 16 Ω, 80-kHz measurement bandwidth		0.000214%		
				–113		dB
IMD	Intermodulation distortion	SMPTE/DIN two-tone, 4:1 (60 Hz and 7 kHz), G = 1, V_O = 3 V_{RMS}, R_L = 2 kΩ, 90-kHz measurement bandwidth		0.000018%		
				–135		dB
		CCIF twin-tone (19 kHz and 20 kHz), G = 1, V_O = 3 V_{RMS}, R_L = 2 kΩ, 90-kHz measurement bandwidth		0.00005%		
				–126		dB
FREQUENCY RESPONSE						
GBW	Gain-bandwidth product	G = 1000		32		MHz
		G = 1		8		
SR	Slew rate	G = –1		10		V/µs
	Full-power bandwidth(1)	V_O = 1 V_P		1.6		MHz
	Overload recovery time	G = –10		300		ns
	Channel separation (dual)	f = 1 kHz		140		dB
NOISE						
	Input voltage noise	f = 20 Hz to 20 kHz		2.1		μV_{PP}
e_n	Input voltage noise density(2)	f = 10 Hz		10		nV/√Hz
		f = 100 Hz		4		
		f = 1 kHz		2.8		
I_n	Input current noise density	f = 10 Hz		2.5		pA/√Hz
		f = 1 kHz		0.8		
OFFSET VOLTAGE						
V_{OS}	Input offset voltage			±100	±500	µV
		T_A = –40°C to +125°C			±600	
dV_{OS}/dT	Input offset voltage drift(2)	T_A = –40°C to +125°C		0.5	2.5	µV/°C
PSRR	Power-supply rejection ratio			0.1	3	µV/V
INPUT BIAS CURRENT						
I_B	Input bias current			1.2	2.0	µA
		T_A = –40°C to +125°C(2)			2.2	
I_{OS}	Input offset current			±10	±50	nA
		T_A = –40°C to +125°C(2)			±80	
INPUT VOLTAGE RANGE						
V_{CM}	Common-mode voltage range		(V–) + 1.5		(V+) – 1	V
CMRR	Common-mode rejection ratio	(V–) + 1.5 V ≤ V_{CM} ≤ (V+) – 1 V, T_A = –40°C to +125°C	110	127		dB

(1) Full-power bandwidth = SR / (2π × V_P), where SR = slew rate.
(2) Specified by design and characterization.

Electrical Characteristics: (continued)

at T_A = +25°C, V_S = ±2 V to ±18 V, V_{CM} = V_{OUT} = midsupply, and R_L = 1 kΩ (unless otherwise noted)

PARAMETER		TEST CONDITIONS		MIN	TYP	MAX	UNIT
INPUT IMPEDANCE							
	Differential				60k || 0.8		Ω || pF
	Common-mode				500M || 0.9		Ω || pF
OPEN-LOOP GAIN							
A_{OL}	Open-loop voltage gain	(V–) + 2 V ≤ V_O ≤ (V+) – 2 V, R_L = 32 Ω, V_S = ± 5 V		114	120		dB
		(V–) + 1.5 V ≤ V_O ≤ (V+) – 1.5 V, R_L = 600 Ω, V_S = ± 18 V		120	136		
OUTPUT							
V_O	Voltage output swing from rail	Positive rail	No load		800		mV
			R_L = 600 Ω		900		
		Negative rail	No load		800		
			R_L = 600 Ω		900		
I_{OUT}	Output current				See Figure 38 and Figure 39		mA
Z_O	Open-loop output impedance				See Figure 40		Ω
I_{SC}	Short-circuit current	V_S = ±18 V			+145 / –130		mA
C_{LOAD}	Capacitive load drive				See Figure 24		pF
ENABLE PIN							
V_{IH}	Logic high threshold				0.82		V
		T_A = –40°C to +125°C				0.95	
V_{IL}	Logic low threshold				0.78		V
		T_A = –40°C to +125°C		0.65			
I_{IH}	Input current	V_{EN} = 1.8 V			1.5		µA
POWER SUPPLY							
I_Q	Quiescent current (per channel)	V_{EN} = 2.0 V, I_{OUT} = 0 A			2.6	3.3	mA
			T_A = –40°C to +125°C (2)			4.2	
		V_{EN} = 0 V, I_{OUT} = 0 A			5	10	µA

Copyright © 2015–2016, Texas Instruments Incorporated

6.6 Typical Characteristics

at T_A = 25°C, V_S = ±18 V, and R_L = 2 kΩ (unless otherwise noted)

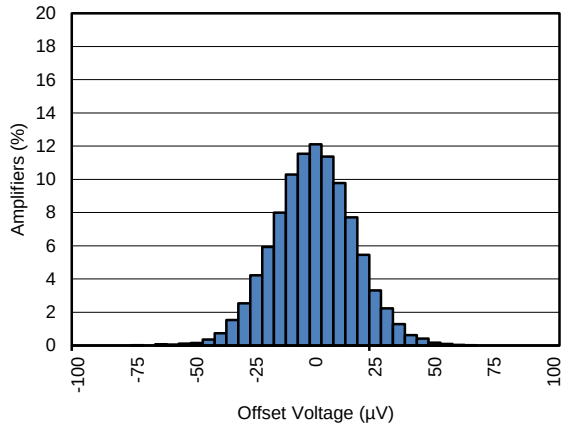

9250 channels

Figure 1. Input Offset Voltage Histogram

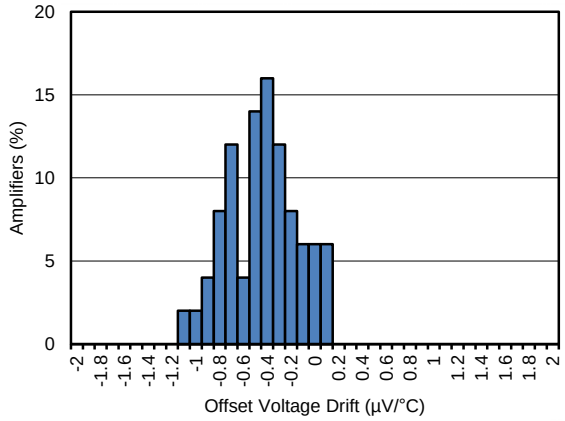

50 channels

Figure 2. Input Offset Voltage Drift Histogram

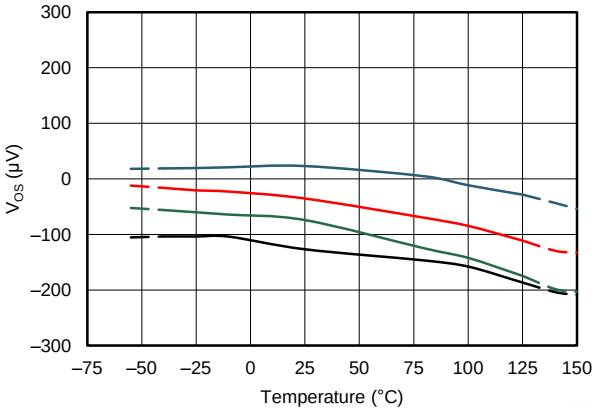

4 typical units

Figure 3. Input Offset Voltage vs Temperature

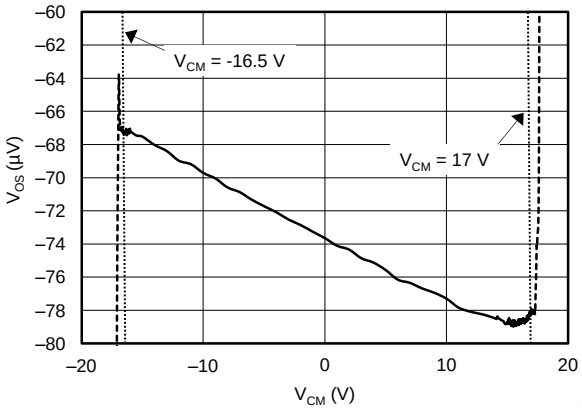

Figure 4. Input Offset Voltage vs Common-Mode Voltage

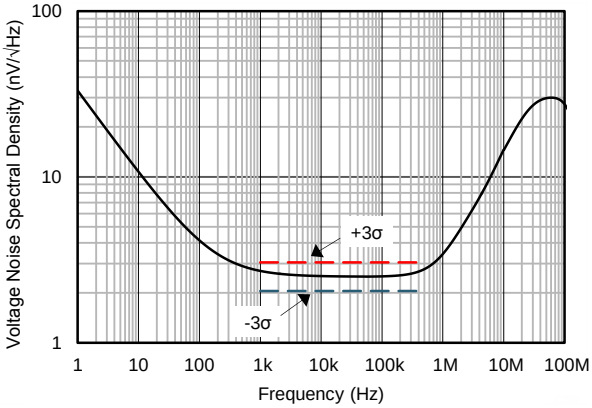

Figure 5. Input Voltage Noise Spectral Density vs Frequency

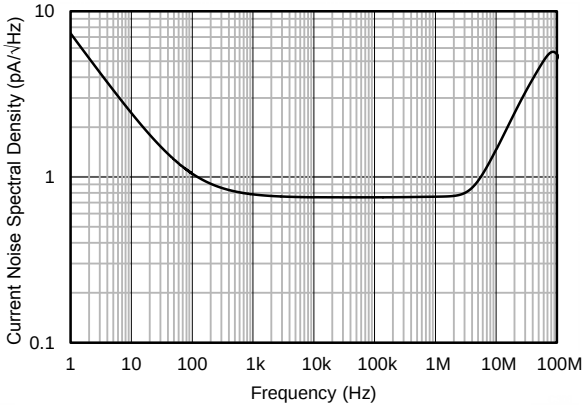

Figure 6. Input Current Noise Spectral Density vs Frequency

Typical Characteristics (continued)

at T_A = 25°C, V_S = ±18 V, and R_L = 2 kΩ (unless otherwise noted)

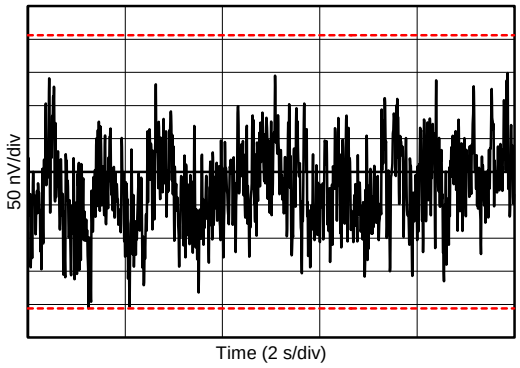

Figure 7. 0.1-Hz to 10-Hz Noise

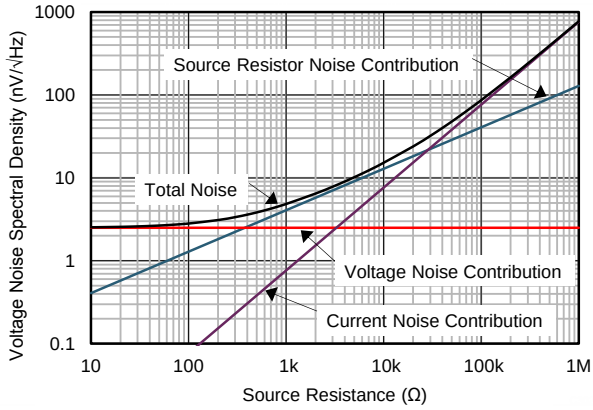

Figure 8. Voltage Noise vs Source Resistance

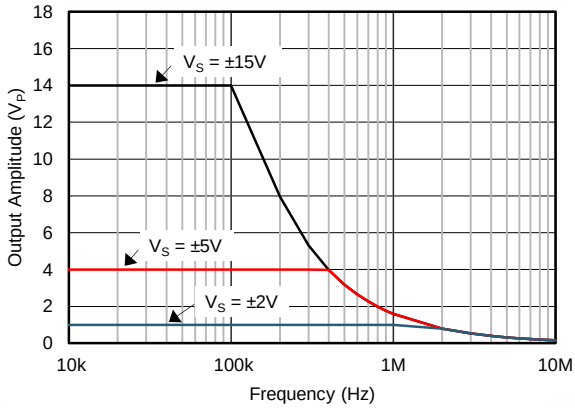

Figure 9. Maximum Output Voltage vs Frequency

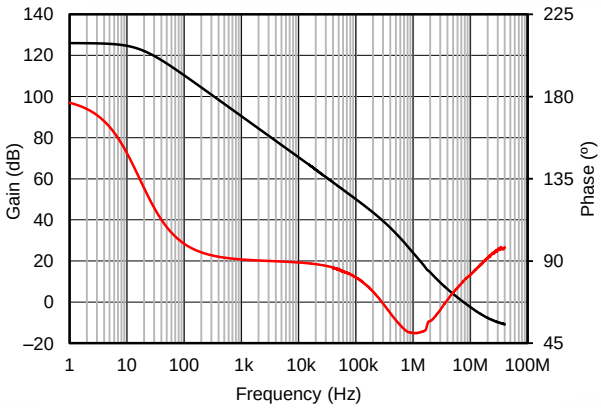

Figure 10. Open-Loop Gain and Phase vs Frequency

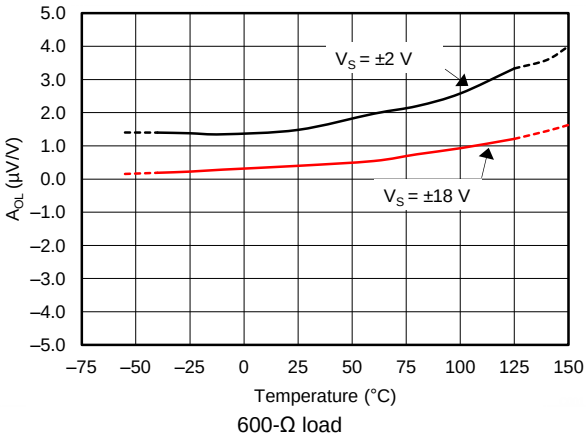

Figure 11. Open-Loop Gain vs Temperature

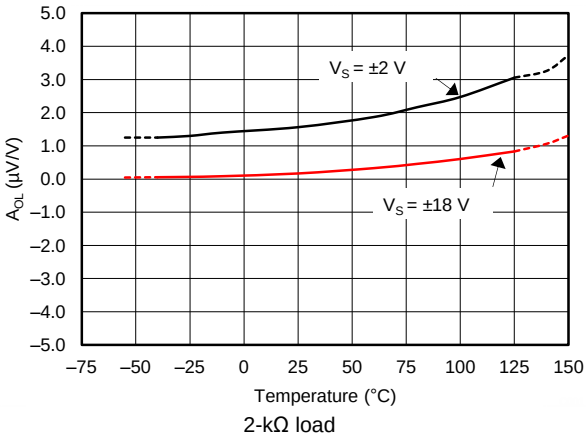

Figure 12. Open-Loop Gain vs Temperature

Copyright © 2015–2016, Texas Instruments Incorporated

Typical Characteristics (continued)

at T_A = 25°C, V_S = ±18 V, and R_L = 2 kΩ (unless otherwise noted)

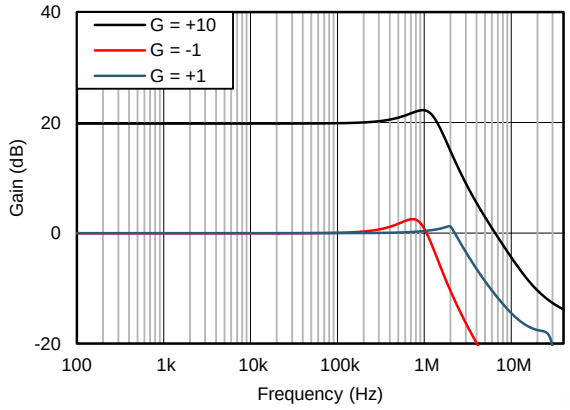

Figure 13. Closed-Loop Gain vs Frequency

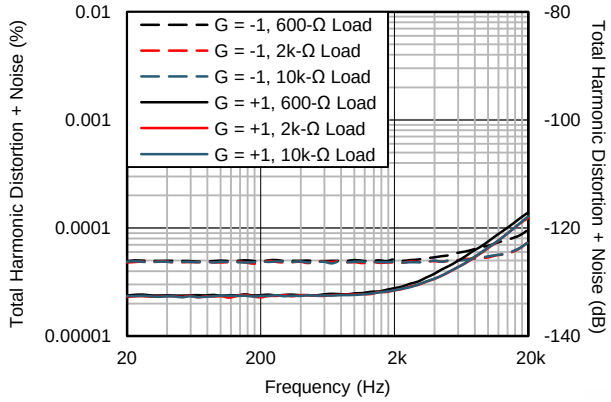

3.5 V_{RMS}, 80-kHz measurement bandwidth

Figure 14. THD+N Ratio vs Frequency

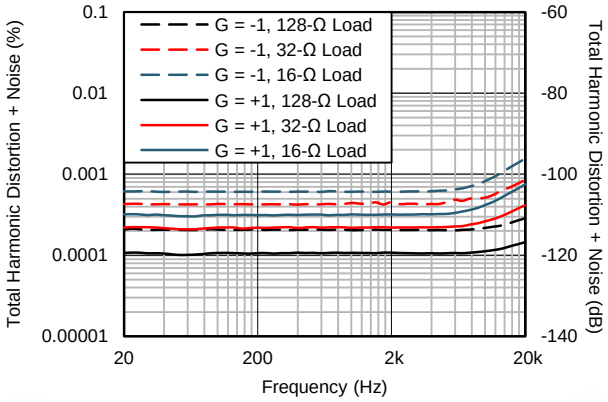

10 mW, 80-kHz measurement bandwidth

Figure 15. THD+N Ratio vs Frequency

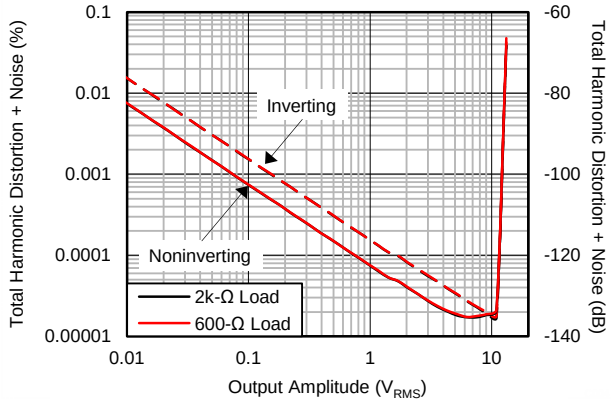

1 kHz, 80-kHz measurement bandwidth

Figure 16. THD+N Ratio vs Output Amplitude

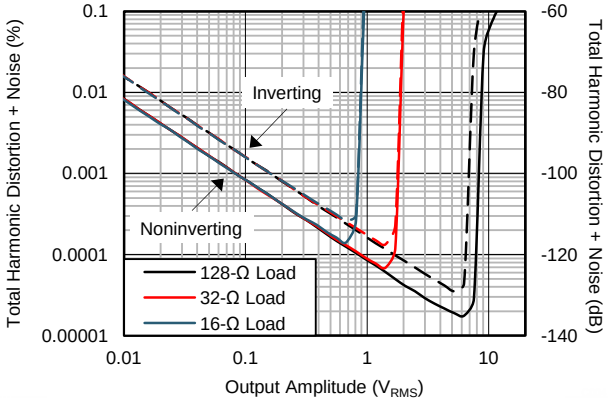

1 kHz, 80-kHz measurement bandwidth

Figure 17. THD+N Ratio vs Output Amplitude

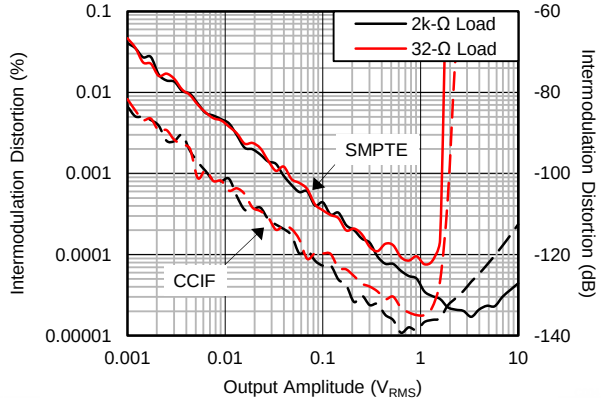

90-kHz measurement bandwidth

Figure 18. Intermodulation Distortion vs Output Amplitude

Typical Characteristics (continued)

at T_A = 25°C, V_S = ±18 V, and R_L = 2 kΩ (unless otherwise noted)

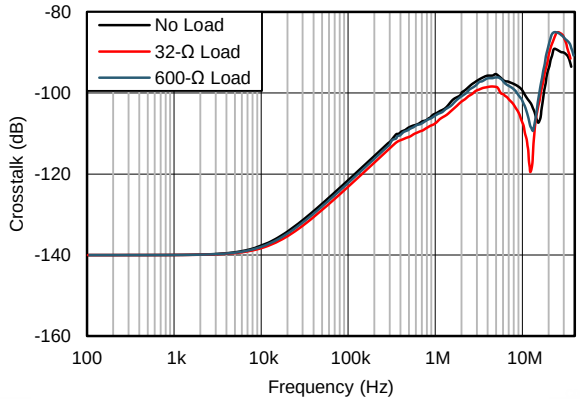

Figure 19. Channel Separation vs Frequency

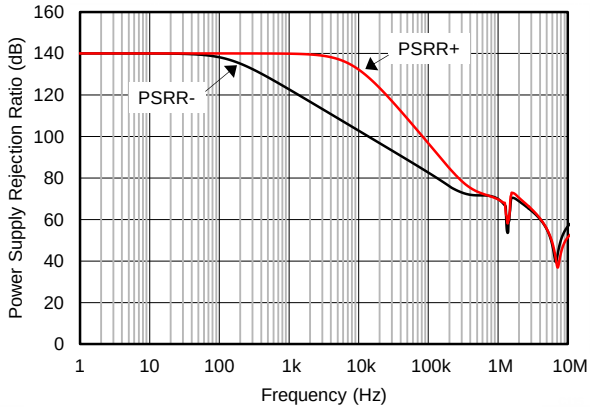

Figure 20. PSRR vs Frequency (Referred to Input)

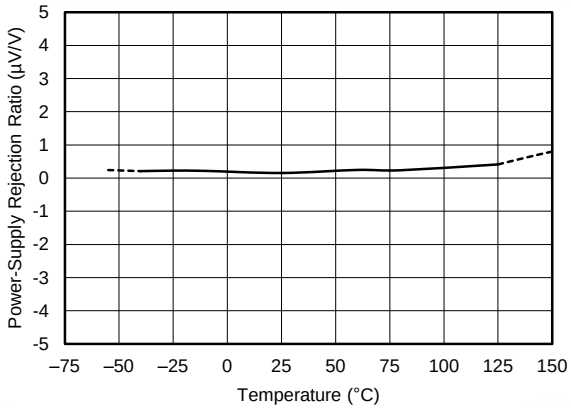

Figure 21. PSRR vs Temperature

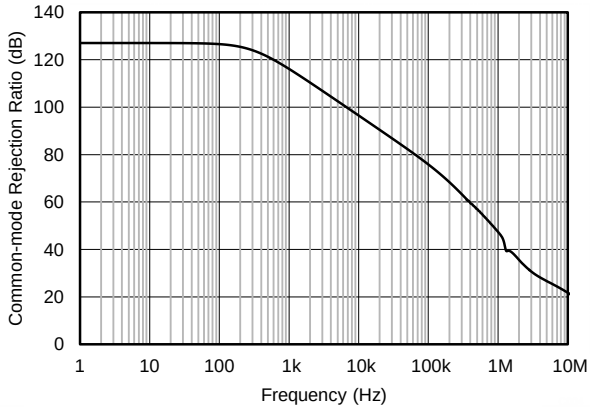

Figure 22. CMRR vs Frequency (Referred to Input)

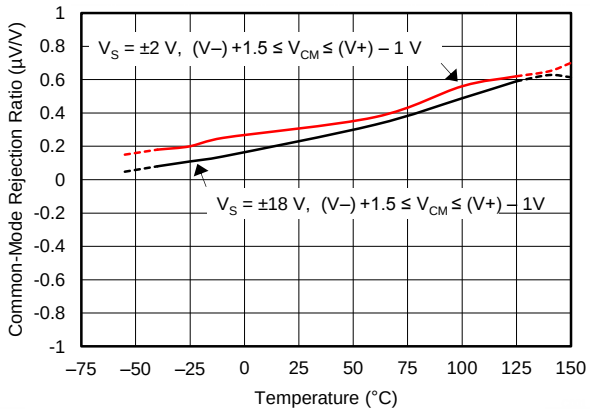

Figure 23. CMRR vs Temperature

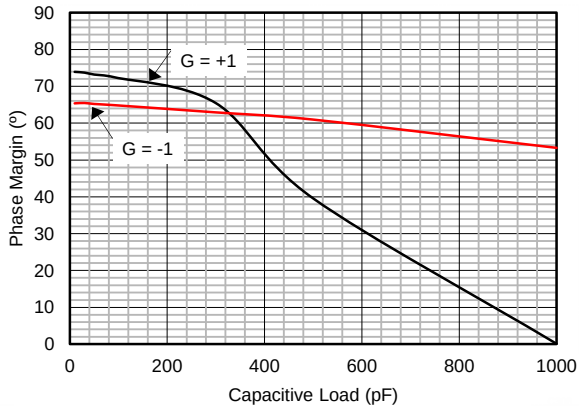

Figure 24. Phase Margin vs Capacitive Load

Copyright © 2015–2016, Texas Instruments Incorporated

Typical Characteristics (continued)

at T_A = 25°C, V_S = ±18 V, and R_L = 2 kΩ (unless otherwise noted)

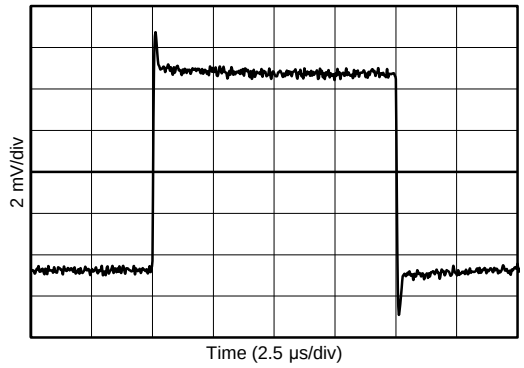

G = 1, 10 mV

Figure 25. Small-Signal Step Response

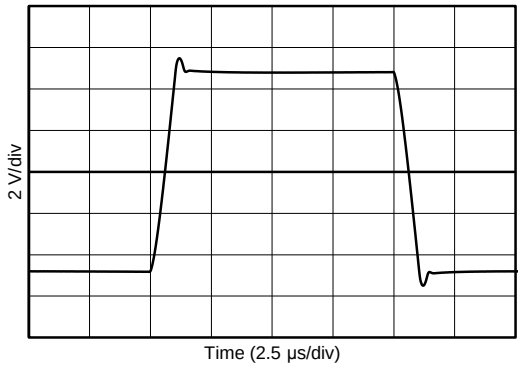

G = 1, 10 V

Figure 26. Large-Signal Step Response

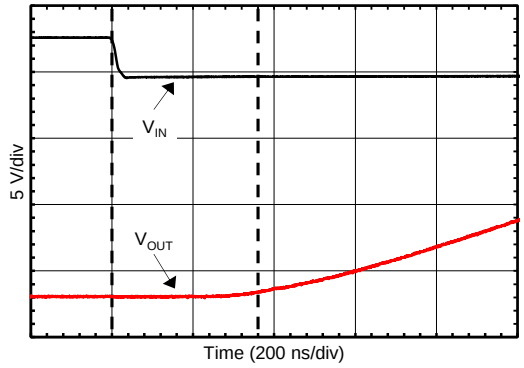

G = –10

Figure 27. Negative Overload Recovery

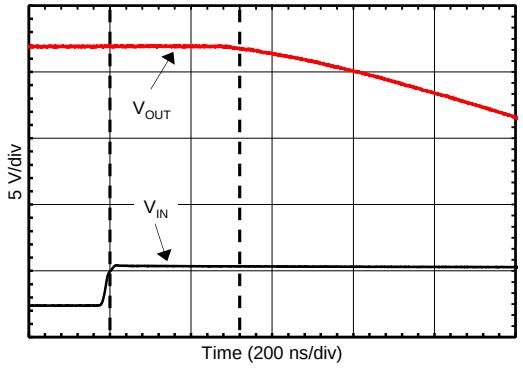

G = –10

Figure 28. Positive Overload Recovery

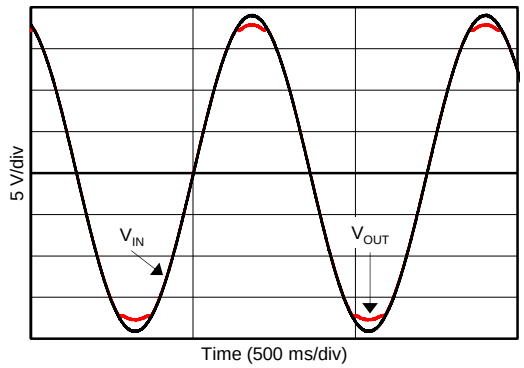

Figure 29. No Phase Reversal

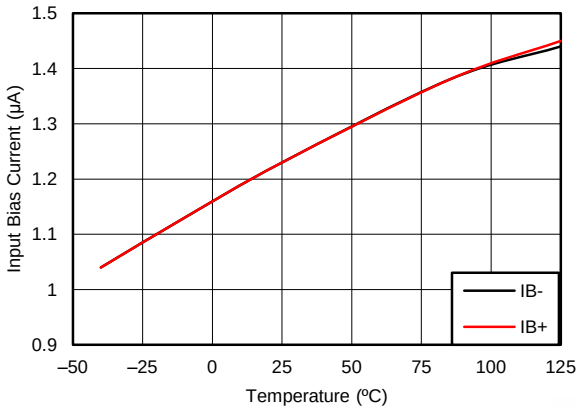

Figure 30. I_B vs Temperature

Typical Characteristics (continued)

at T_A = 25°C, V_S = ±18 V, and R_L = 2 kΩ (unless otherwise noted)

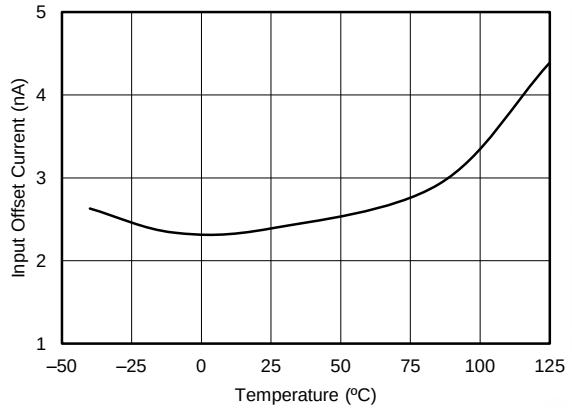

Figure 31. I_{OS} vs Temperature

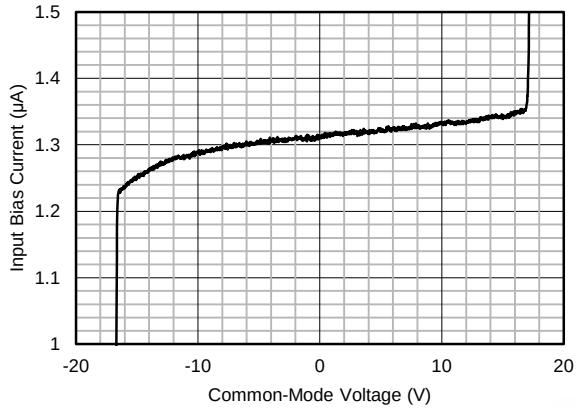

Figure 32. I_B vs Common-Mode Voltage

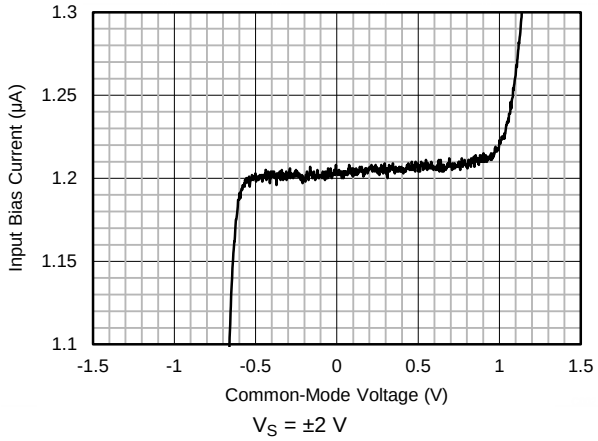

Figure 33. I_B vs Common-Mode Voltage

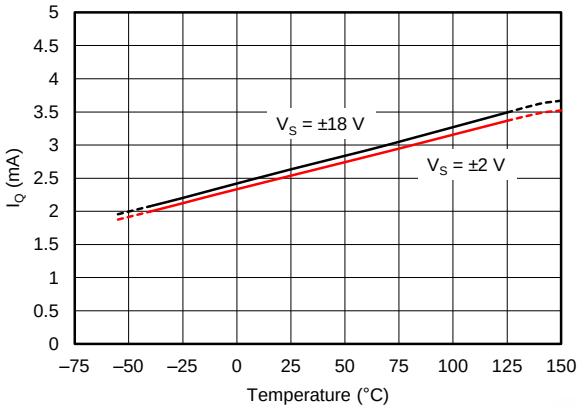

Figure 34. Quiescent Current vs Temperature

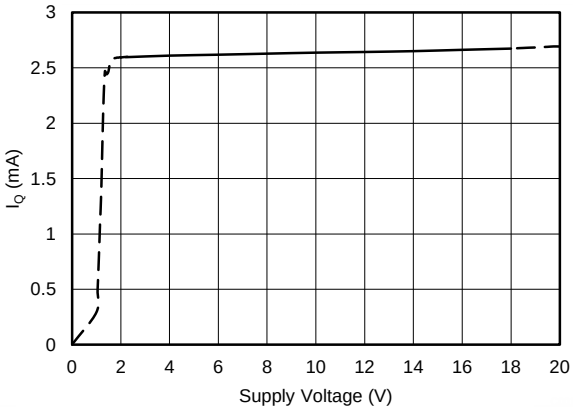

Figure 35. Quiescent Current vs Supply Voltage

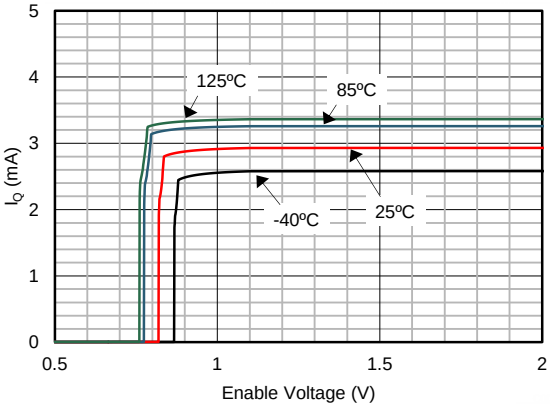

Figure 36. Quiescent Current vs Enable Voltage

Copyright © 2015–2016, Texas Instruments Incorporated

Typical Characteristics (continued)

at T_A = 25°C, V_S = ±18 V, and R_L = 2 kΩ (unless otherwise noted)

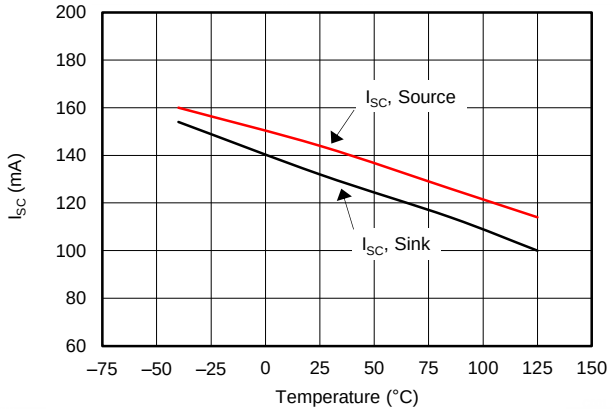

Figure 37. Short-Circuit Current vs Temperature

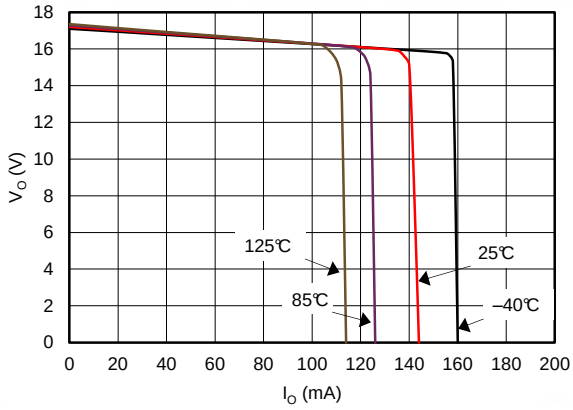

Figure 38. Positive Output Voltage vs Output Current

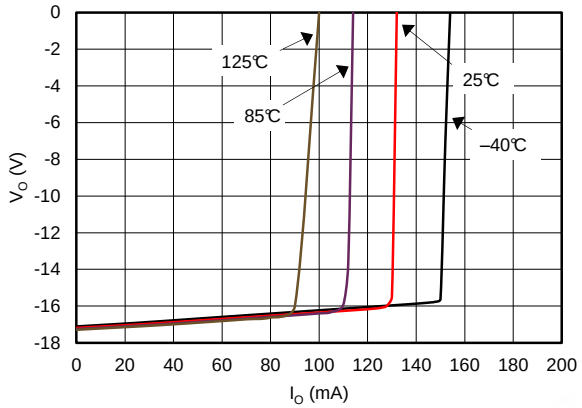

Figure 39. Negative Output Voltage vs Output Current

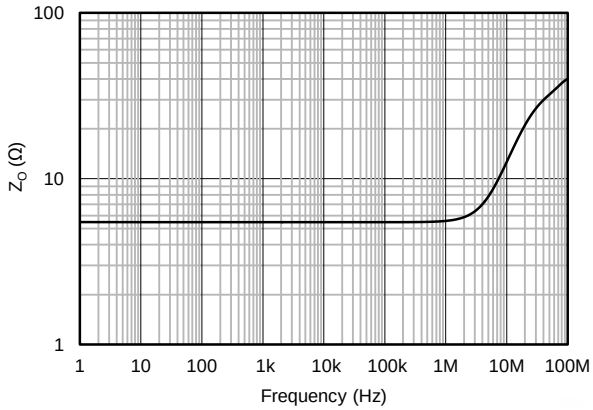

Figure 40. Open-Loop Output Impedance vs Frequency

7 Detailed Description

7.1 Overview

The OPA1622, dual, bipolar-input, audio operational amplifier uses a unique internal topology to deliver high output current with extremely low distortion while consuming minimal supply current. A single gain stage architecture, combining a high-gain transconductance input stage and a unity gain output stage, allows the OPA1622 to achieve an open-loop gain of 136 dB, even with 600-Ω loads.

The output stage of the OPA1622 is designed specifically to source and sink large amounts of current without degrading amplifier linearity. High-order distortion harmonics, produced by output stage crossover distortion, are greatly reduced with this design. The OPA1622 output stage also provides exceptionally low open-loop output impedance that improves stability with capacitive loads and is protected against short-circuit events.

A separate enable circuit maintains control of the input and output stage when the amplifier is placed into its shutdown mode and limits transients at the amplifier output when transitioning to and from this state. The enable circuit features logic levels referenced to the amplifier ground pin. This configuration simplifies the interface between the amplifier and the ground-referenced GPIO pins of microcontrollers. The addition of a ground pin to the amplifier provides several additional benefits. For example, the compensation capacitor between the input and output stages of the OPA1622 is referenced to the ground pin, greatly improving PSRR.

7.2 Functional Block Diagram

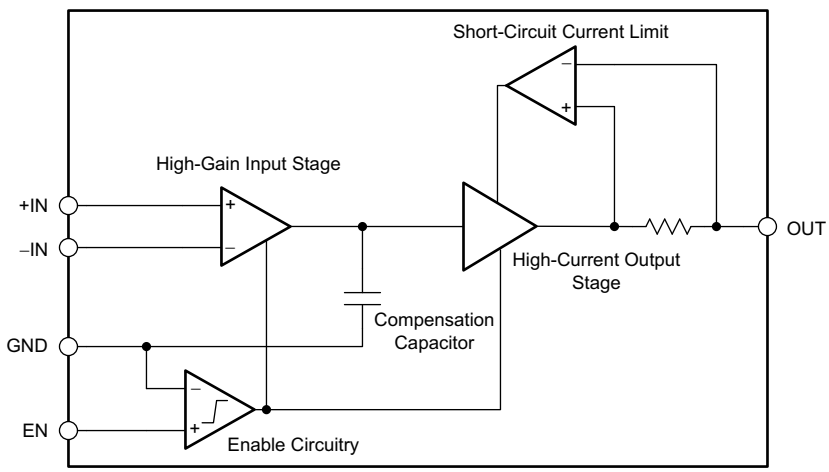

Copyright © 2016, Texas Instruments Incorporated

Figure 41. OPA1622 Simplified Schematic

7.3 Feature Description

7.3.1 Power Dissipation

The OPA1622 is capable of high output current with power-supply voltages up to ±18 V. Internal power dissipation increases when operating at high supply voltages. The power dissipated in the op amp (P_{OPA}) is calculated using Equation 1:

$$P_{OPA} = (V_{+} - V_{OUT}) \times I_{OUT} = (V_{+} - V_{OUT}) \times \frac{V_{OUT}}{R_L} \quad (1)$$

Copyright © 2015–2016, Texas Instruments Incorporated

Feature Description (continued)

In order to calculate the worst-case power dissipation in the op amp, the ac and dc cases must be considered separately.

In the case of constant output current (dc) to a resistive load, the maximum power dissipation in the op amp occurs when the output voltage is half the positive supply voltage. This calculation assumes that the op amp is sourcing current from the positive supply to a grounded load. If the op amp sinks current from a grounded load, modify Equation 2 to include the negative supply voltage instead of the positive.

$$P_{OPA(MAX_DC)} = P_{OPA}\left(\frac{V_+}{2}\right) = \frac{V_+^{\,2}}{4R_L} \tag{2}$$

The maximum power dissipation in the op amp for a sinusoidal output current (ac) to a resistive load occurs when the peak output voltage is 2/π times the supply voltage, given symmetrical supply voltages:

$$P_{OPA(MAX_AC)} = P_{OPA}\left(\frac{2V_+}{\pi}\right) = \frac{2 \cdot V_+^{\,2}}{\pi^2 \cdot R_L} \tag{3}$$

The dominant pathway for the OPA1622 to dissipate heat is through the package thermal pad and pins to the PCB. Copper leadframe construction used in the OPA1622 improves heat dissipation compared to conventional materials. PCB layout greatly affects thermal performance. Connect the OPA1622 package thermal pad to a copper pour at the most negative supply potential. This copper pour can be connected to a larger copper plane within the PCB using vias to improve power dissipation. Figure 42 shows an analogous thermal circuit that can be used for approximating the junction temperature of the OPA1622. The power dissipated in the OPA1622 is represented by current source P_D; the ambient temperature is represented by voltage source 25ºC; and the junction-to-board and board-to-ambient thermal resistances are represented by resistors θ_{JB} and θ_{BA}, respectively. The board-to-ambient thermal resistance is unique to every application. The sum of θ_{JB} and θ_{BA} is the junction-to-ambient thermal resistance of the system. The value for junction-to-ambient thermal resistance reported in the *Thermal Information* table is determined using the JEDEC standard test PCB. The voltages in the analogous thermal circuit at the points T_J and T_{PCB} represent the OPA1622 junction and PCB temperatures, respectively.

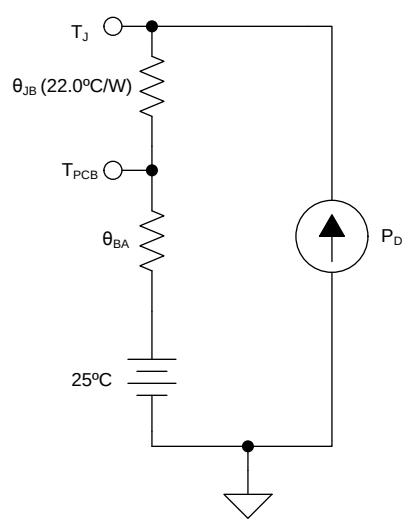

Figure 42. Approximate Thermal System Model of the OPA1622 Soldered to a PCB.

7.3.2 Thermal Shutdown

If the junction temperature of the OPA1622 exceeds 175ºC, a thermal shutdown circuit disables the amplifier in order to protect the device from damage. The amplifier is automatically re-enabled after the junction temperature falls below approximately 160ºC. If the condition that caused excessive power dissipation has not been removed, the amplifier oscillates between a shutdown and enabled state until the output fault is corrected.

Feature Description (continued)

7.3.3 Enable Pin

The enable pin (EN) of the OPA1622 is used to toggle the amplifier enabled and disabled states. The logic levels defining these two states are: $V_{EN} \leq 0.78$ V (shutdown mode), and $V_{EN} \geq 0.82$ V (enabled). These threshold levels are referenced to the device ground pin. The enable pin can be driven by a GPIO pin from the system controller, discrete logic gates, or can be connected directly to the V+ supply. Do not leave the enable pin floating because the amplifier is prevented from being enabled. Likewise, do not place GPIO pins used to control the enable pin in a high-impedance state because this placement also prevents the amplifier from being enabled. A small current flows into the enable pin when a voltage is applied. Using the simplified internal schematic shown in Figure 43, use Equation 4 to estimate the enable pin current:

$$I_{EN} = \frac{V_{EN} - 0.7\ \text{V}}{700\ \text{k}\Omega} \tag{4}$$

As illustrated in Figure 43, the enable pin is protected by diodes to the amplifier power supplies. Do not connect the enable pin to voltages outside the limits defined in the *Specifications* section.

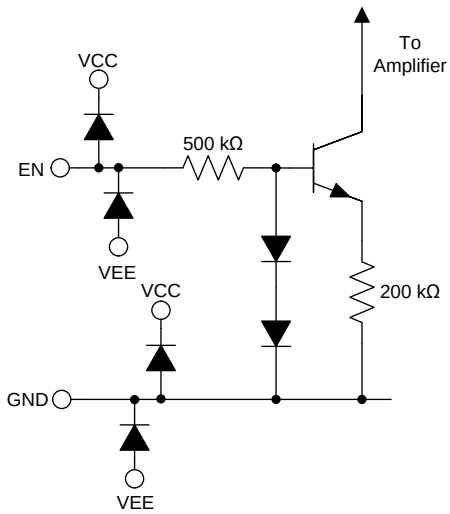

Figure 43. Enable Pin Simplified Internal Schematic

7.3.4 Ground Pin

The inclusion of a ground pin in the OPA1622 architecture allows the internal enable circuitry to be referenced to the system ground, eliminating the need for level shifting circuitry in many applications. The internal amplifier compensation capacitors are also referenced to this pin, greatly increasing the ac PSRR. For highest performance, connect the ground pin to a low-impedance reference point with minimal noise present. As shown in Figure 43, the ground pin is protected by ESD diodes to the amplifier power supplies. Do not connect the ground pin to voltages outside the limits defined in the *Specifications* section.

7.3.5 Electrical Overstress

Designers often ask questions about the capability of an operational amplifier to withstand electrical overstress. These questions tend to focus on the device inputs, but can involve the supply voltage pins or even the output pin. Each of these different pin functions have electrical stress limits determined by the voltage breakdown characteristics of the particular semiconductor fabrication process and specific circuits connected to the pin. Additionally, internal electrostatic discharge (ESD) protection is built into these circuits to protect them from accidental ESD events both before and during product assembly.

Having a good understanding of this basic ESD circuitry and its relevance to an electrical overstress event is helpful. Figure 44 shows the ESD circuits contained in the OPA1622. The ESD protection circuitry involves several current-steering diodes connected from the input and output pins and routed back to the internal power-supply lines, where they meet at an absorption device internal to the operational amplifier. This protection circuitry is intended to remain inactive during normal circuit operation.

Copyright © 2015–2016, Texas Instruments Incorporated

Feature Description (continued)

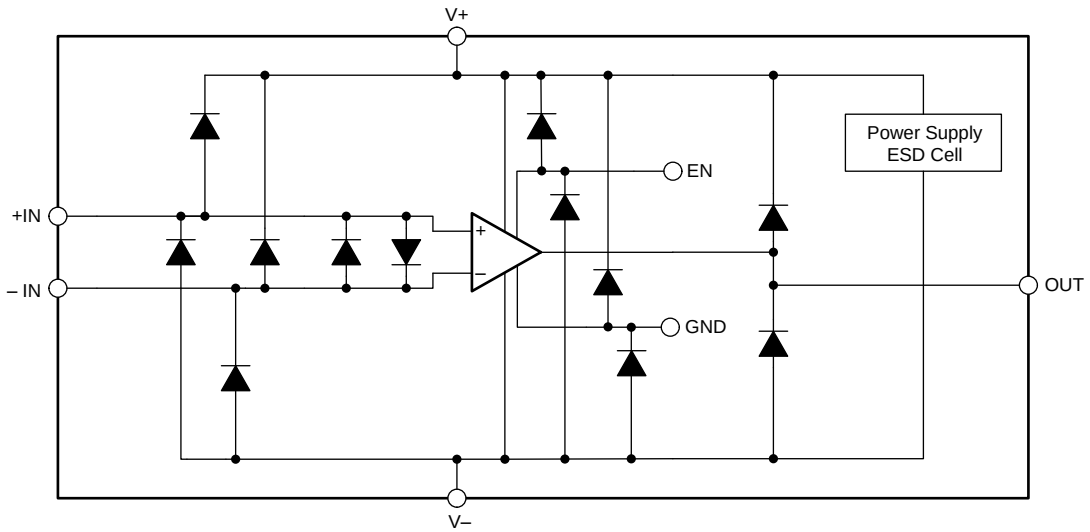

Figure 44. Equivalent Internal ESD Circuitry

7.3.6 Input Protection

The input pins of the OPA1622 are protected from excessive differential voltage with back-to-back diodes, as Figure 45 shows. In most circuit applications, the input protection circuitry has no consequence. However, in low-gain or G = +1 circuits, fast-ramping input signals can forward bias these diodes because the output of the amplifier cannot respond quickly enough to the input ramp. If the input signal is fast enough to create this forward-bias condition, the input signal current must be limited to 10 mA or less. If the input signal current is not inherently limited, use an input series resistor (R_I) or a feedback resistor (R_F) to limit the signal input current. This input series resistor degrades the low-noise performance of the OPA1622 and is examined in the *Noise Performance* section. Figure 45 shows an example configuration when both current-limiting input and feedback resistors are used.

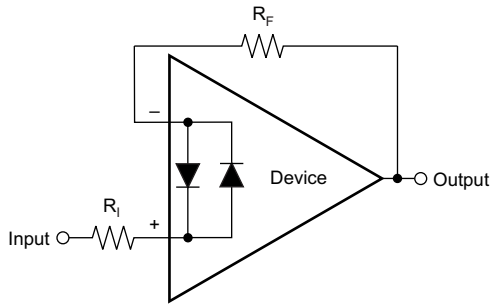

Figure 45. Pulsed Operation

7.4 Device Functional Modes

The OPA1622 has two operating modes determined by the voltage between the enable and ground pins: a shutdown mode (V_{EN} ≤ 0.78V) and an enabled mode (V_{EN} ≥ 0.82V). The measured datasheet performance parameters specified in the *Typical Characteristics* and *Specifications* sections are given with the amplifier in the enabled mode, unless otherwise noted.

Device Functional Modes (continued)

7.4.1 Shutdown Mode

When the enable pin voltage is below the logic low threshold, the OPA1622 enters a shutdown mode with minimal power consumption. In this state the output transistors of the amplifier are not powered on. However, do not consider the amplifier output to be high-impedance. Applying signals to the output of the OPA1622 while the device is in the shutdown mode can parasitically power the output stage, causing the OPA1622 output to draw current.

The OPA1622 enable circuitry limits transients at the output when transitioning into or out of shutdown mode. However, small output transients do still accompany this transition, as illustrated in Figure 46 and Figure 47. Note that in both figures the time scale is 1 µs per division, indicating that the output transients are extremely brief in nature, and therefore not likely to be audible in headphone applications.

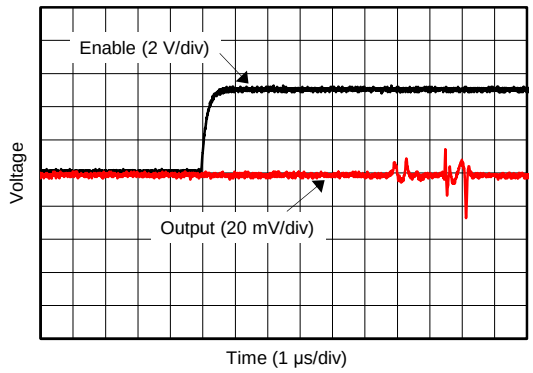

Figure 46. OPA1622 Output Voltage When Enable Pin Transitions High (32-Ω Load Connected)

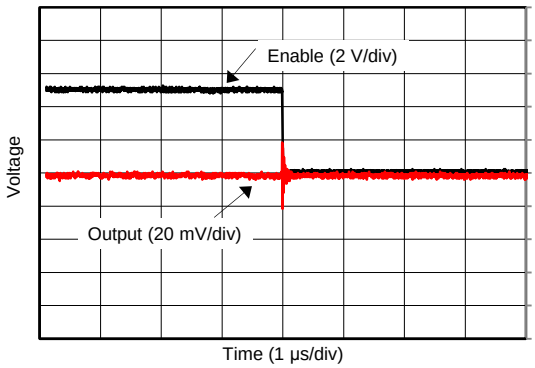

Figure 47. OPA1622 Output Voltage When Enable Pin Transitions Low (32-Ω Load Connected)

7.4.2 Output Transients During Power Up and Power Down

To minimize the possibility of output transients that might produce an audible *click* or *pop*, ramp the supply voltages for the OPA1622 symmetrically to their nominal values. Asymmetrical supply ramping can cause output transients during power up that can be audible in headphone applications. If possible, hold the enable pin low while the power supplies are ramping up or down. If the enable pin is not being independently controlled (for example, by a GPIO pin), use a voltage divider to hold the enable pin voltage below the logic-high threshold until the power supplies reach the specified minimum voltage, as shown in Figure 48.

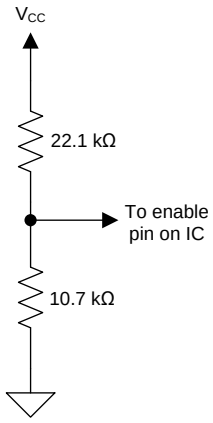

Figure 48. Voltage Divider Used to Hold Enable Low at Power-Up or Power-Down

Copyright © 2015–2016, Texas Instruments Incorporated

8 Application and Implementation

NOTE

Information in the following applications sections is not part of the TI component specification, and TI does not warrant its accuracy or completeness. TI's customers are responsible for determining suitability of components for their purposes. Customers should validate and test their design implementation to confirm system functionality.

8.1 Application Information

The low noise and distortion of the OPA1622 make the device well suited for a variety of applications in professional and consumer audio products. However, these same performance metrics also make the OPA1622 useful for industrial, test-and-measurement, and data-acquisition applications. The example shown here is only one possible application where the OPA1622 provides exceptional performance.

8.1.1 Noise Performance

Figure 49 shows the total circuit noise for varying source impedances with the op amp in a unity-gain configuration (no feedback resistor network, and therefore no additional noise contributions).

The OPA1622 is shown with total circuit noise calculated. The op amp contributes both a voltage noise component and a current noise component. The voltage noise is commonly modeled as a time-varying component of the offset voltage. The current noise is modeled as the time-varying component of the input bias current, and reacts with the source resistance to create a voltage component of noise. Therefore, the lowest noise op amp for a given application depends on the source impedance. For low source impedance, current noise is negligible, and voltage noise generally dominates. The low voltage and current noise of the OPA1622 op amp make the device an excellent choice for use in applications where the source impedance is less than 10 kΩ.

8.1.1.1 Noise Calculations

The equations in Figure 50 show the calculation of the total circuit noise using these parameters:

- e_n = voltage noise
- I_n = current noise
- R_S = source impedance
- k = Boltzmann's constant = 1.38×10^{-23} J/K
- T = temperature in kelvins (K)

8.1.1.2 Application Curve

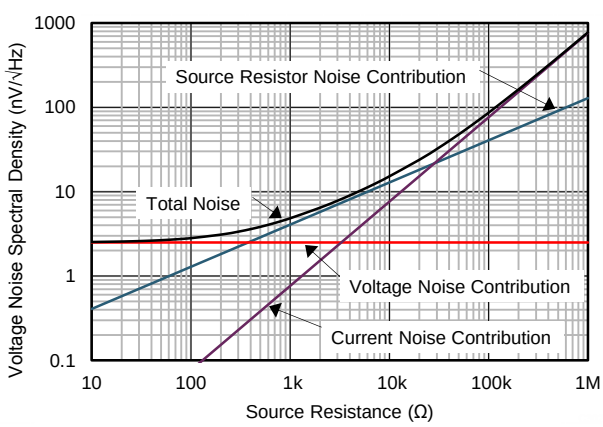

Figure 49. Noise Performance of the OPA1622 in a Unity-Gain Buffer Configuration

Application Information (continued)

8.1.1.3 Basic Noise Calculations

Designing low-noise op amp circuits requires careful consideration of a variety of possible noise contributors, such as noise from the signal source, noise generated in the op amp, and noise from the feedback network resistors. The total noise of the circuit is the root sum squared combination of all noise components.

The resistive portion of the source impedance produces thermal noise proportional to the square root of the resistance. Figure 49 plots this function. The source impedance is usually fixed; consequently, select the op amp and the feedback resistors to minimize the respective contributions to the total noise.

Figure 50 shows both inverting and noninverting op amp circuit configurations with gain. In circuit configurations with gain, the feedback network resistors also contribute noise.

The current noise of the op amp reacts with the feedback resistors to create additional noise components. Choose feedback resistor values that make these noise sources negligible. The equations for total noise are shown for both configurations.

Noise in Noninverting Gain Configuration

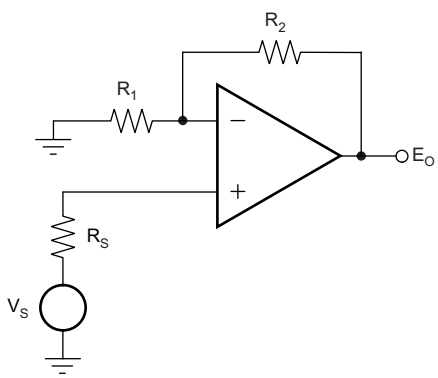

Noise at the output:

$$E_O^2 = \left[1+\frac{R_2}{R_1}\right]^2 e_n^2 + e_1^2 + e_2^2 + (i_n R_2)^2 + e_S^2 + (i_n R_S)^2 \left[1+\frac{R_2}{R_1}\right]^2$$

where

- $e_S = \sqrt{4kTR_S} \times \left[1+\frac{R_2}{R_1}\right]$ = thermal noise of R_S
- $e_1 = \sqrt{4kTR_1} \times \left[\frac{R_2}{R_1}\right]$ = thermal noise of R_1
- $e_2 = \sqrt{4kTR_2}$ = thermal noise of R_2

Noise in Inverting Gain Configuration

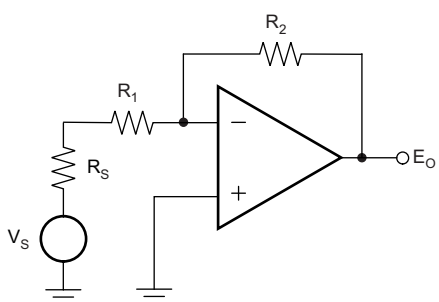

Noise at the output:

$$E_O^2 = \left[1+\frac{R_2}{R_1+R_S}\right]^2 e_n^2 + e_1^2 + e_2^2 + (i_n R_2)^2 + e_S^2$$

where

- $e_S = \sqrt{4kTR_S} \times \left[\frac{R_2}{R_1+R_S}\right]$ = thermal noise of R_S
- $e_1 = \sqrt{4kTR_1} \times \left[\frac{R_2}{R_1+R_S}\right]$ = thermal noise of R_1
- $e_2 = \sqrt{4kTR_2}$ = thermal noise of R_2

For the OPA1622 at 1 kHz, e_n = 2.8 nV/$\sqrt{Hz}$ and i_n = 800 fA/$\sqrt{Hz}$.

Figure 50. Noise Calculation in Gain Configurations

Copyright © 2015–2016, Texas Instruments Incorporated

Application Information (continued)

8.1.2 Total Harmonic Distortion Measurements

The distortion produced by OPA1622 is below the measurement limit of many commercially-available distortion analyzers. However, a special test circuit, as shown in Figure 51, can be used to extend the measurement capabilities.

$$\text{Gain}_{(\text{Signal})} = 1 + \frac{R_2}{R_1}$$

$$\text{Gain}_{(\text{Distortion})} = 1 + \frac{R_2}{R_1 \parallel R_3}$$

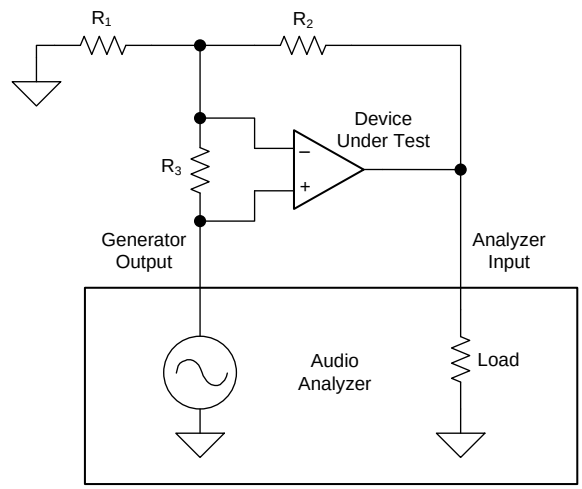

Figure 51. Distortion Test Circuit

Consider op amp distortion an internal error source that is referred to the input. Figure 51 shows a circuit that causes the op amp distortion to be 101 times (approximately 40 dB) greater than that normally produced by the op amp. The addition of R_3 to the otherwise standard noninverting amplifier configuration alters the feedback factor or noise gain of the circuit. The closed-loop gain is unchanged, but the feedback available for error correction is reduced by a factor of 101, thus extending the resolution by 101. Note that the input signal and load applied to the op amp are the same as with conventional feedback without R_3. Keep the value of R_3 small to minimize its effect on the distortion measurements.

Verify the validity of this technique by duplicating measurements at high gain or high frequency where the distortion is within the measurement capability of the test equipment.

8.2 Typical Application

The low distortion and high output-current capabilities of the OPA1622 make this device an excellent choice for headphone-amplifier applications in portable or studio applications. These applications typically employ an audio digital-to-analog converter (DAC) and a separate headphone amplifier circuit connected to the DAC output. High-performance audio DACs can have an output signal that is either a varying current or voltage. Voltage output configurations require less external circuitry, and therefore have advantages in cost, power consumption, and solution size. However, these configurations can offer slightly lower performance than current output configurations. Differential outputs are standard on both types of DACs. Differential outputs double the output signal levels that can be delivered on a single, low-voltage supply, and also allow for even-harmonics common to both outputs to be cancelled by external circuitry. A simplified representation of a voltage-output audio DAC is shown in Figure 52. Two ac voltage sources (V_{AC}) deliver the output signal to the complementary outputs through their associated output impedances (R_{OUT}). Both output signals have a dc component as well, represented by dc voltage source V_{DC}. The headphone amplifier circuit connected to the output of an audio DAC must convert the differential output into a single-ended signal and be capable of producing signals of sufficient amplitude at the headphones to achieve reasonable listening levels.

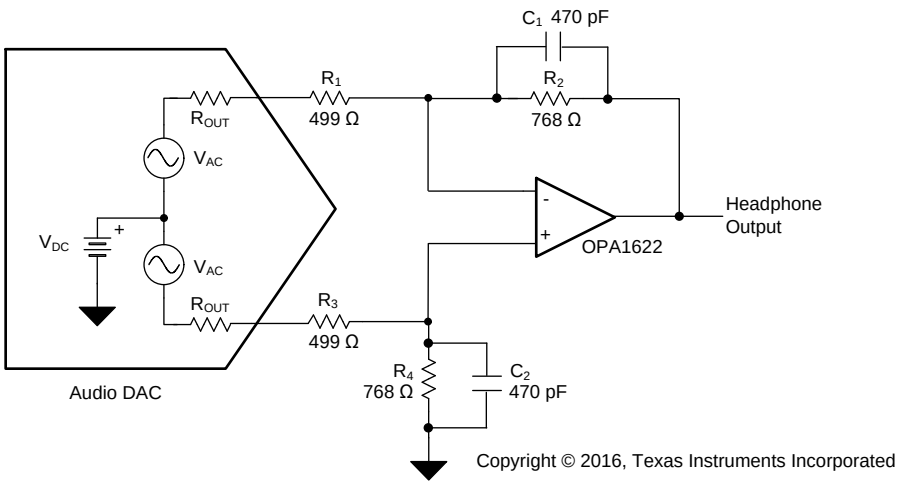

Figure 52. OPA1622 Used as a Headphone Amplifier for a Voltage-Output Audio DAC

8.2.1 Design Requirements

- ±5-V power supplies
- 150-mW output power (32-Ω load)
- < –115-dB THD+N at maximum output (32-Ω load)
- < 0.01-dB magnitude deviation (20 Hz to 20 kHz)

8.2.2 Detailed Design Procedure

Figure 52 shows a schematic of a headphone amplifier circuit for voltage output DACs. An op amp is configured as a difference amplifier that converts the differential output voltage to single-ended. The values of the resistors in the difference amplifier circuit are determined by the specifications of the DAC, such as output voltage and output impedance, as well as the maximum output voltage desired at the headphone output. The op amp chosen must be capable of delivering the necessary current to the headphones and remain stable into typical headphone loads that can have capacitances as high as 400 pF. The following design process uses a hypothetical DAC with common values of output voltage and impedance for the design process. The specifications of the DAC are shown in Table 1:

Table 1. Audio DAC Specifications Used for the Design Process

PARAMETER	VALUE
Maximum differential output voltage	2 V_{RMS}
Output impedance (R_{OUT})	200 Ω
Output dc offset	1.65 V

Copyright © 2015–2016, Texas Instruments Incorporated

The gain of the difference amplifier in Figure 52 is determined by the resistor values, and includes the output impedance of the DAC. For $R_2 = R_4$ and $R_1 = R_3$, the output voltage of the headphone amplifier circuit is shown in Equation 5:

$$V_{OUT} = V_{DAC} \frac{R_2}{R_1 + R_{OUT}} \tag{5}$$

The output voltage required for headphones depends on the headphone impedance, as well as the headphone efficiency (η), a measure of the sound pressure level (SPL, measured in dB) for a certain input power level (typically given at 1 mW). The headphone SPL at other power levels is calculated using Equation 6:

$$SPL(dB) = \eta + 10\log\left(\frac{P_{IN}}{1\ mW}\right)$$

where

- η = efficiency
- P_{IN} = input power to the headphones (6)

Figure 53 shows the input power required to produce certain SPLs for different headphone efficiencies. Typically, over-the-ear style headphones have lower efficiencies than in-ear types with 95 dB/mW being a common value.

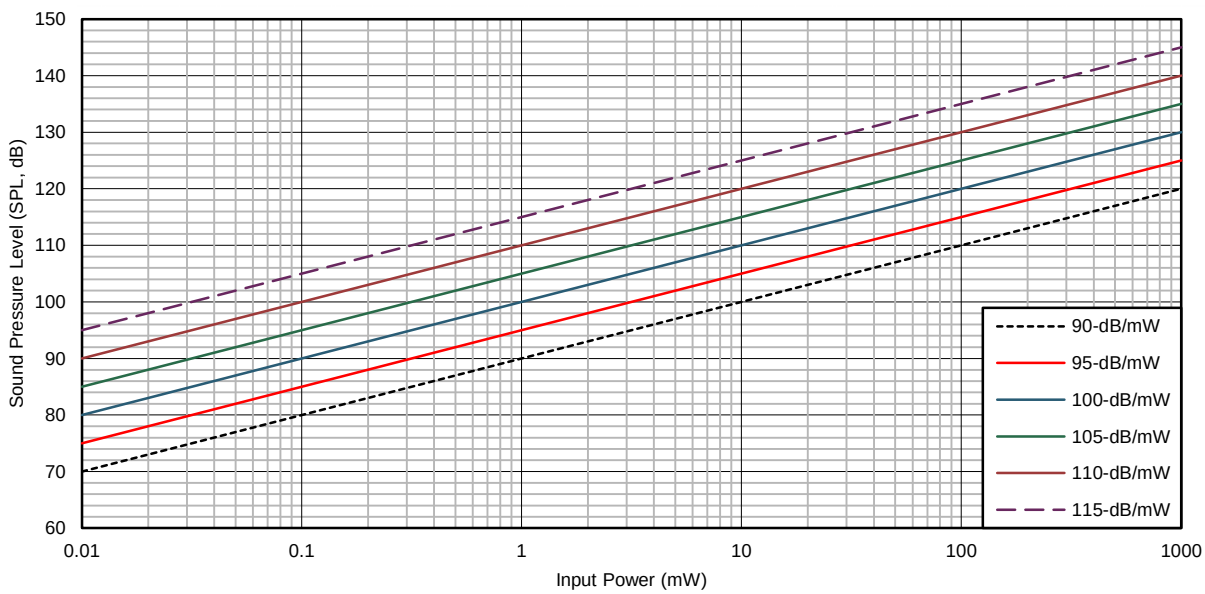

Figure 53. Sound Pressure Level vs Input Power for Headphones of Various Efficiencies

In-ear headphones can have efficiencies of 115 dB/mW or greater, and therefore have much lower power requirements. The output power goal for this design is 150 mW; sufficient power to produce extremely loud sound pressure levels in a wide range of headphones. A 32-Ω headphone impedance is used for this requirement because 32 Ω is a very common value in headphones for portable applications. Equation 7 shows the voltage required for 32-Ω headphones:

$$V_O = \sqrt{P \times R} = \sqrt{150\ mW \times 32\ \Omega} = 2.191\ V_{RMS} \tag{7}$$

A tradeoff exists when selecting resistor values for this design. First, high resistor values contribute additional noise to the circuit, degrading the audio performance. However, extremely low resistor values draw excessive current from the DAC, increasing distortion. A value of 499 Ω is used for resistors R_1 and R_3 as a reasonable compromise between these two considerations. Resistor R_2 and R_4 can then be calculated as shown in Equation 8:

$$V_{OUT} = V_{DAC} \frac{R_2}{R_1 + R_{OUT}} \rightarrow 1.095 = \frac{R_2}{499\ \Omega + 200\ \Omega} \rightarrow R_2 = 765.4\ \Omega \rightarrow 768\ \Omega \tag{8}$$

In order to accommodate higher impedance headphones, increase the gain of the circuit to produce greater output voltages. However, increasing the gain also increases the noise of the circuit and limits the dynamic range of the circuit into lower impedance headphones. For this reason, some designers choose to select the headphone amplifier gain by using a switch.

Capacitors C_1 and C_2 limit the bandwidth of the circuit to prevent the unnecessary amplification of interfering signals. The maximum value of these capacitors is determined by the limitations on frequency response magnitude deviation detailed in the *Design Requirements* section. C_1 and C_2 combine with resistors R_2 and R_4 to form a pole, as shown in Equation 9:

$$f_P = \frac{1}{2\pi(R_2,R_4)(C_1,C_2)} \tag{9}$$

Calculate the minimum pole frequency allowable to meet the magnitude deviation requirements using Equation 10:

$$f_P \geq \frac{f}{\sqrt{\left(\frac{1}{G}\right)^2 - 1}} \geq \frac{20\text{ kHz}}{\sqrt{\left(\frac{1}{0.999}\right)^2 - 1}} \geq 416.6\text{ kHz}$$

where

- G represents the gain in decimal for a –0.01-dB deviation at 20 kHz. (10)

Use Equation 11 to calculate the upper limit for the value of C_1 and C_2 in order to meet the goal for minimal magnitude deviation at 20 kHz.

$$C_1,C_2 \leq \frac{1}{2\pi(R_2,R_4)F_P} \leq \frac{1}{2\pi(768\ \Omega)(416.6\text{ kHz})} \leq 497\text{ pF} \rightarrow 470\text{ pF} \tag{11}$$

8.2.3 Application Curves

The circuit described in Figure 52 is constructed using 0.1% tolerance thin-film resistors (0603 package) and surface-mount film capacitors. The performance of the circuit is measured using a high-performance audio analyzer and is displayed in Figure 54 through Figure 59. The maximum output power for three common headphone impedances is shown in Table 2

Table 2. Maximum Output Power and THD+N Before Clipping for Common Headphone Impedances

LOAD IMPEDANCE (Ω)	MAXIMUM OUTPUT POWER BEFORE CLIPPING (mW)	THD+N AT MAXIMUM OUTPUT POWER (dB)
16	95	–114.2
32	150	–118.7
600	11.3	–119.4

The maximum output power delivered to low impedance headphone loads (16 Ω and 32 Ω) is limited by the output current capabilities of the amplifier. For the 600-Ω case, the maximum power delivered is limited by the output voltage capability of the amplifier and depends greatly on the power-supply voltages used. Figure 55 shows the maximum output voltage achievable for each load before the onset of clipping (±5-V supplies), indicated by a sharp increase in distortion.

As more current is delivered by the output transistors of an amplifier, additional distortion is produced. At low frequencies, this distortion is corrected by the feedback loop of the amplifier. However, as the loop gain of the amplifier begins to decline at high frequencies, the overall distortion begins to climb. The unique output stage design of the OPA1622 greatly reduces the additional distortion at high frequency when delivering large currents, as shown in Figure 56. High-ordered harmonics (above the 2nd and 3rd) are also kept to a minimal level at high output powers, as shown in Figure 57 through Figure 59.

Copyright © 2015–2016, Texas Instruments Incorporated

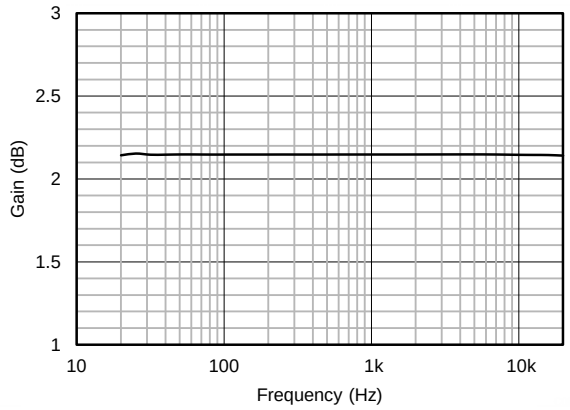

Figure 54. Headphone Amplifier Transfer Function

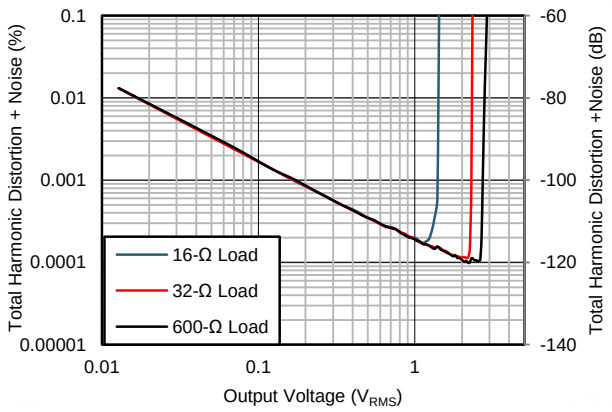

22.4-kHz measurement bandwidth

Figure 55. THD+N vs Output Voltage for Headphone Loads

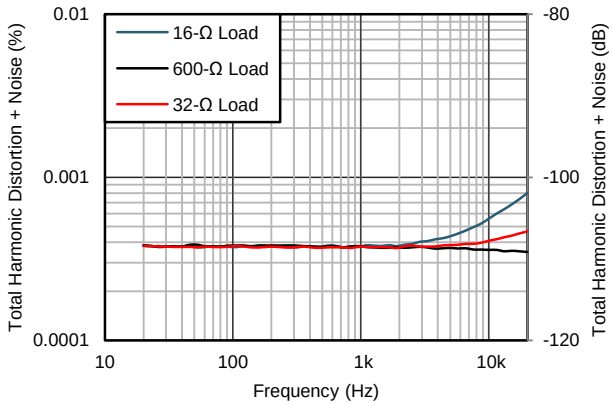

90-kHz measurement bandwidth, 1-V_{RMS} output

Figure 56. THD+N vs Frequency for Headphone Loads

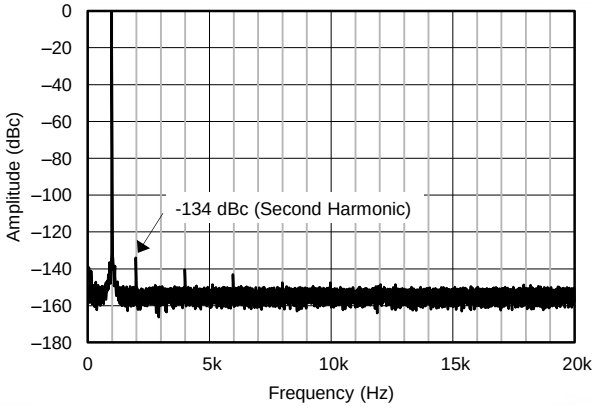

1 kHz, 32-Ω load, 10 mW

Figure 57. Output Spectrum

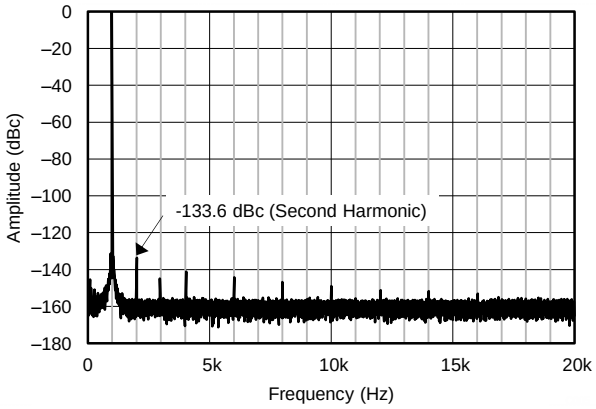

1 kHz, 32-Ω load, 50 mW

Figure 58. Output Spectrum

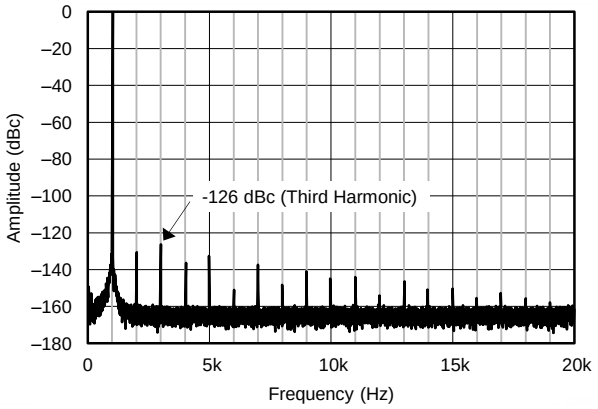

1 kHz, 32-Ω load, 150 mW

Figure 59. Output Spectrum

Copyright © 2015–2016, Texas Instruments Incorporated

9 Power Supply Recommendations

The OPA1622 op amp operates from ±2-V to ±18-V supplies, while maintaining excellent performance. However, some applications do not require equal positive and negative output voltage swing. With the OPA1622, power-supply voltages do not need to be equal. For example, the positive supply could be set to +25 V with the negative supply at –5 V.

In all cases, the common-mode voltage must be maintained within the specified range. Key parameters are specified over the temperature range of T_A = –40°C to +125°C. Parameters that vary with operating voltage or temperature are shown in the *Typical Characteristics* section.

10 Layout

10.1 Layout Guidelines

For best operational performance of the device, use good printed circuit board (PCB) layout practices, including:

- Connect low-ESR, 0.1-µF ceramic bypass capacitors between each supply pin and ground, placed as close to the device as possible. A single bypass capacitor from V+ to ground is applicable for single-supply applications. The bypass capacitors are used to reduce the coupled noise by providing low-impedance power sources local to the analog circuitry, because noise can propagate into analog circuitry through the power pins of the circuit as a whole and the op amp specifically.
- Connect the IC ground pin to a low-impedance, low-noise, system reference point, such as an analog ground.
- Place the external components as close to the device as possible. As shown in Figure 60, keep feedback resistors close to the inverting input to minimize parasitic capacitance and the feedback loop area.
- Keep the length of input traces as short as possible. Always remember that the input traces are the most sensitive part of the circuit.
- For proper amplifier function, connect the package thermal pad to the most negative supply voltage (VEE).

10.2 Layout Example

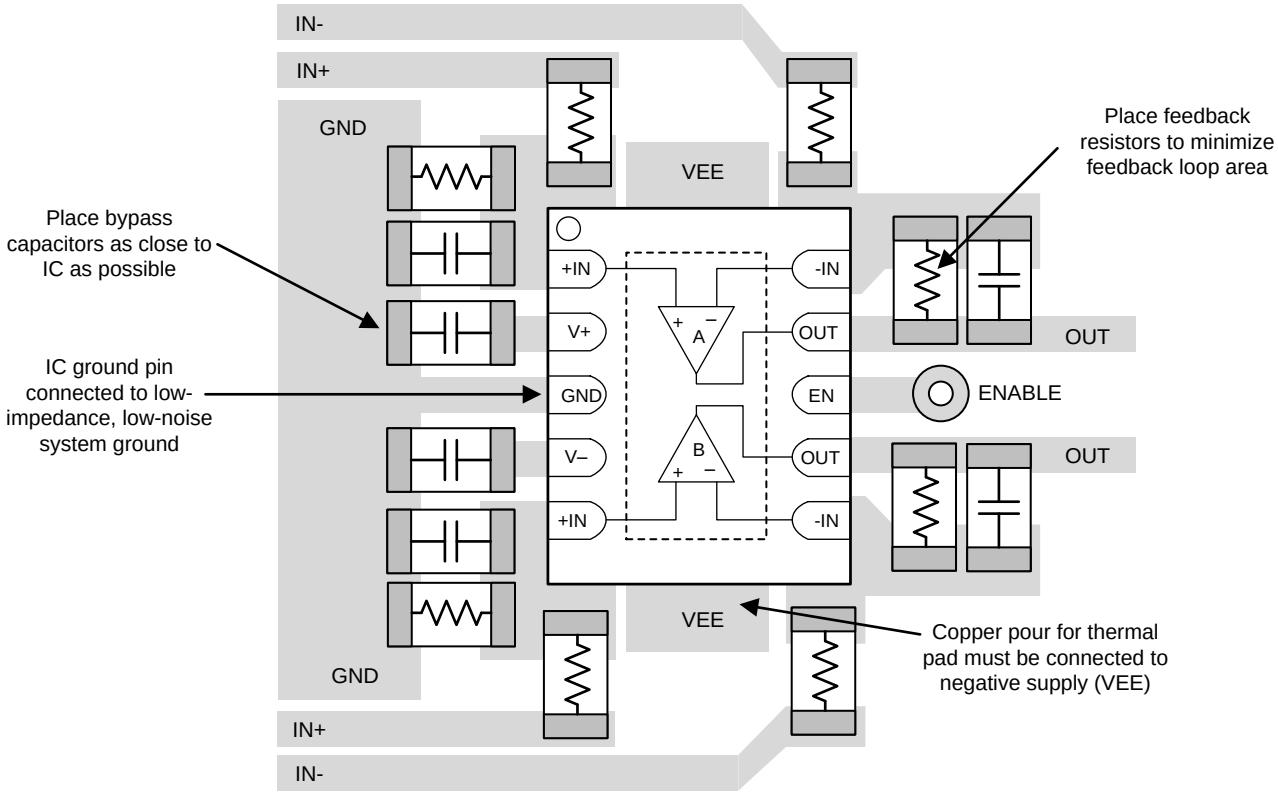

Figure 60. Operational Amplifier Board Layout for a Difference Amplifier Configuration

Copyright © 2015–2016, Texas Instruments Incorporated

11 Device and Documentation Support

11.1 Device Support

11.1.1 Development Support

11.1.1.1 TINA-TI™ (Free Software Download)

TINA™ is a simple, powerful, and easy-to-use circuit simulation program based on a SPICE engine. TINA-TI is a free, fully-functional version of the TINA software, preloaded with a library of macro models in addition to a range of both passive and active models. TINA-TI provides all the conventional dc, transient, and frequency domain analysis of SPICE, as well as additional design capabilities.

Available as a free download from the Analog eLab Design Center, TINA-TI offers extensive post-processing capability that allows users to format results in a variety of ways. Virtual instruments offer the ability to select input waveforms and probe circuit nodes, voltages, and waveforms, creating a dynamic quick-start tool.

NOTE

These files require that either the TINA software (from DesignSoft™) or TINA-TI software be installed. Download the free TINA-TI software from the TINA-TI folder.

11.1.1.2 TI Precision Designs

TI Precision Designs are available online at http://www.ti.com/ww/en/analog/precision-designs/. TI Precision Designs are analog solutions created by TI's precision analog applications experts and offer the theory of operation, component selection, simulation, complete PCB schematic and layout, bill of materials, and measured performance of many useful circuits.

11.2 Documentation Support

11.2.1 Related Documentation

For related documentation see the following:

- *Feedback Plots Define Op Amp AC Performance*, SBOA015
- *Circuit Board Layout Techniques*, SLOA089
- *Headphone Amplifier for Voltage-Output Audio DACs Reference Design*,TIDUAW1
- *Stabilizing Difference Amplifiers for Headphone Applications*,SLYT630
- *Reducing Distortion from CMOS Analog Switches*,SLYT612

11.3 Community Resources

The following links connect to TI community resources. Linked contents are provided "AS IS" by the respective contributors. They do not constitute TI specifications and do not necessarily reflect TI's views; see TI's Terms of Use.

TI E2E™ Online Community ***TI's Engineer-to-Engineer (E2E) Community.*** Created to foster collaboration among engineers. At e2e.ti.com, you can ask questions, share knowledge, explore ideas and help solve problems with fellow engineers.

Design Support ***TI's Design Support*** Quickly find helpful E2E forums along with design support tools and contact information for technical support.

11.4 Trademarks

SoundPlus, E2E are trademarks of Texas Instruments.
TINA-TI is a trademark of Texas Instruments, Inc and DesignSoft, Inc.
Blu-ray is a trademark of Blu-ray Disc Association.
TINA, DesignSoft are trademarks of DesignSoft, Inc.
All other trademarks are the property of their respective owners.

11.5 Electrostatic Discharge Caution

This integrated circuit can be damaged by ESD. Texas Instruments recommends that all integrated circuits be handled with appropriate precautions. Failure to observe proper handling and installation procedures can cause damage.

ESD damage can range from subtle performance degradation to complete device failure. Precision integrated circuits may be more susceptible to damage because very small parametric changes could cause the device not to meet its published specifications.

11.6 Glossary

SLYZ022 — *TI Glossary*.

This glossary lists and explains terms, acronyms, and definitions.

12 Mechanical, Packaging, and Orderable Information

The following pages include mechanical, packaging, and orderable information. This information is the most current data available for the designated devices. This data is subject to change without notice and revision of this document. For browser-based versions of this data sheet, refer to the left-hand navigation.

Copyright © 2015–2016, Texas Instruments Incorporated

PACKAGING INFORMATION

Orderable Device	Status (1)	Package Type	Package Drawing	Pins	Package Qty	Eco Plan (2)	Lead/Ball Finish (6)	MSL Peak Temp (3)	Op Temp (°C)	Device Marking (4/5)	Samples
OPA1622IDRCR	ACTIVE	VSON	DRC	10	3000	Green (RoHS & no Sb/Br)	NIPDAU	Level-2-260C-1 YEAR	-40 to 125	O1622	Samples
OPA1622IDRCT	ACTIVE	VSON	DRC	10	250	Green (RoHS & no Sb/Br)	NIPDAU	Level-2-260C-1 YEAR	-40 to 125	O1622	Samples

(1) The marketing status values are defined as follows:
ACTIVE: Product device recommended for new designs.
LIFEBUY: TI has announced that the device will be discontinued, and a lifetime-buy period is in effect.
NRND: Not recommended for new designs. Device is in production to support existing customers, but TI does not recommend using this part in a new design.
PREVIEW: Device has been announced but is not in production. Samples may or may not be available.
OBSOLETE: TI has discontinued the production of the device.

(2) **RoHS:** TI defines "RoHS" to mean semiconductor products that are compliant with the current EU RoHS requirements for all 10 RoHS substances, including the requirement that RoHS substance do not exceed 0.1% by weight in homogeneous materials. Where designed to be soldered at high temperatures, "RoHS" products are suitable for use in specified lead-free processes. TI may reference these types of products as "Pb-Free".
RoHS Exempt: TI defines "RoHS Exempt" to mean products that contain lead but are compliant with EU RoHS pursuant to a specific EU RoHS exemption.
Green: TI defines "Green" to mean the content of Chlorine (Cl) and Bromine (Br) based flame retardants meet JS709B low halogen requirements of <=1000ppm threshold. Antimony trioxide based flame retardants must also meet the <=1000ppm threshold requirement.

(3) MSL, Peak Temp. - The Moisture Sensitivity Level rating according to the JEDEC industry standard classifications, and peak solder temperature.

(4) There may be additional marking, which relates to the logo, the lot trace code information, or the environmental category on the device.

(5) Multiple Device Markings will be inside parentheses. Only one Device Marking contained in parentheses and separated by a "~" will appear on a device. If a line is indented then it is a continuation of the previous line and the two combined represent the entire Device Marking for that device.

(6) Lead/Ball Finish - Orderable Devices may have multiple material finish options. Finish options are separated by a vertical ruled line. Lead/Ball Finish values may wrap to two lines if the finish value exceeds the maximum column width.

Important Information and Disclaimer: The information provided on this page represents TI's knowledge and belief as of the date that it is provided. TI bases its knowledge and belief on information provided by third parties, and makes no representation or warranty as to the accuracy of such information. Efforts are underway to better integrate information from third parties. TI has taken and continues to take reasonable steps to provide representative and accurate information but may not have conducted destructive testing or chemical analysis on incoming materials and chemicals. TI and TI suppliers consider certain information to be proprietary, and thus CAS numbers and other limited information may not be available for release.

In no event shall TI's liability arising out of such information exceed the total purchase price of the TI part(s) at issue in this document sold by TI to Customer on an annual basis.

TAPE AND REEL INFORMATION

REEL DIMENSIONS

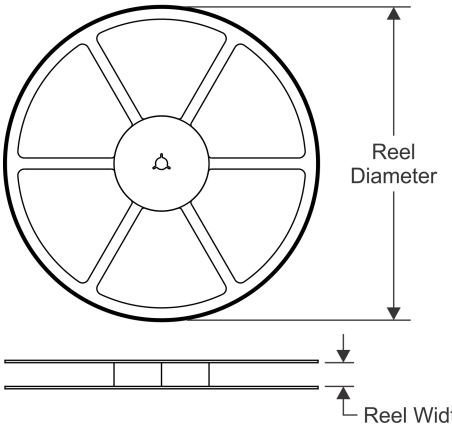

TAPE DIMENSIONS

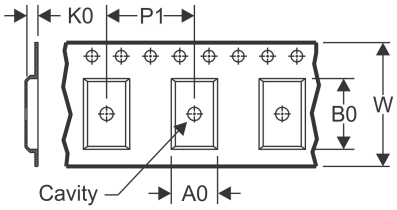

A0	Dimension designed to accommodate the component width
B0	Dimension designed to accommodate the component length
K0	Dimension designed to accommodate the component thickness
W	Overall width of the carrier tape
P1	Pitch between successive cavity centers

QUADRANT ASSIGNMENTS FOR PIN 1 ORIENTATION IN TAPE

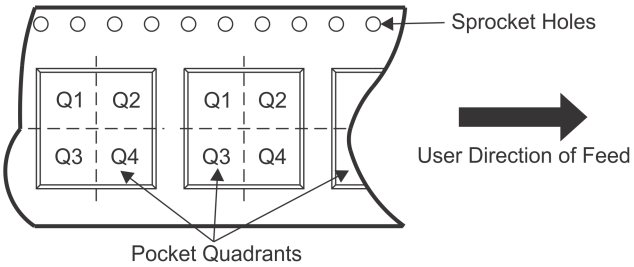

*All dimensions are nominal

Device	Package Type	Package Drawing	Pins	SPQ	Reel Diameter (mm)	Reel Width W1 (mm)	A0 (mm)	B0 (mm)	K0 (mm)	P1 (mm)	W (mm)	Pin1 Quadrant
OPA1622IDRCR	VSON	DRC	10	3000	330.0	12.4	3.3	3.3	1.1	8.0	12.0	Q2
OPA1622IDRCT	VSON	DRC	10	250	180.0	12.4	3.3	3.3	1.1	8.0	12.0	Q2

TAPE AND REEL BOX DIMENSIONS

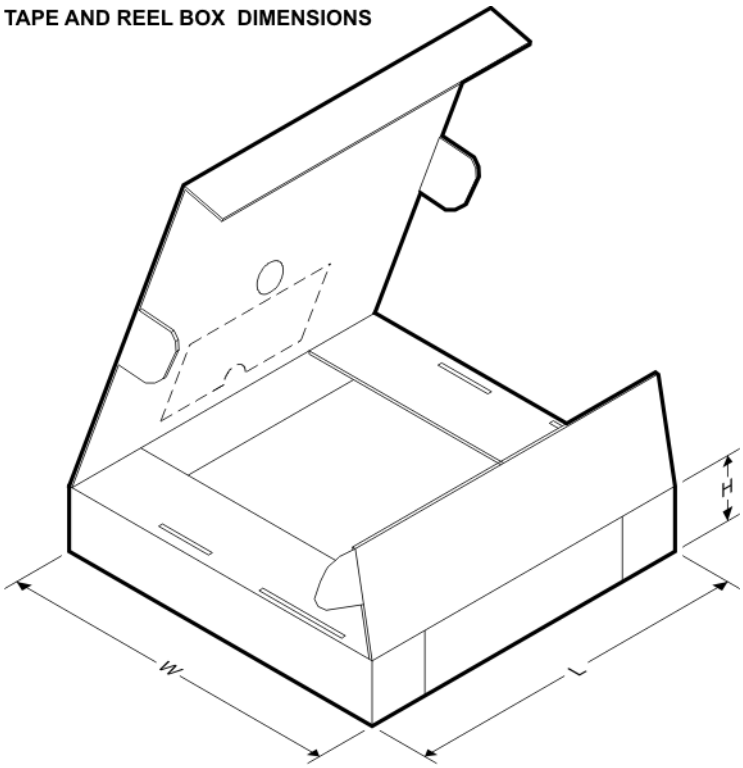

*All dimensions are nominal

Device	Package Type	Package Drawing	Pins	SPQ	Length (mm)	Width (mm)	Height (mm)
OPA1622IDRCR	VSON	DRC	10	3000	367.0	367.0	35.0
OPA1622IDRCT	VSON	DRC	10	250	210.0	185.0	35.0

DRC 10 VSON - 1 mm max height

PLASTIC SMALL OUTLINE - NO LEAD

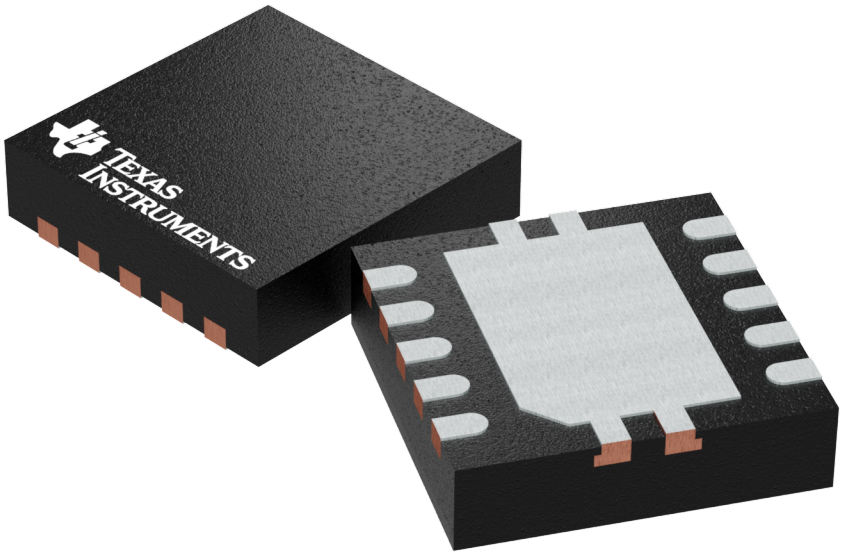

Images above are just a representation of the package family, actual package may vary.
Refer to the product data sheet for package details.

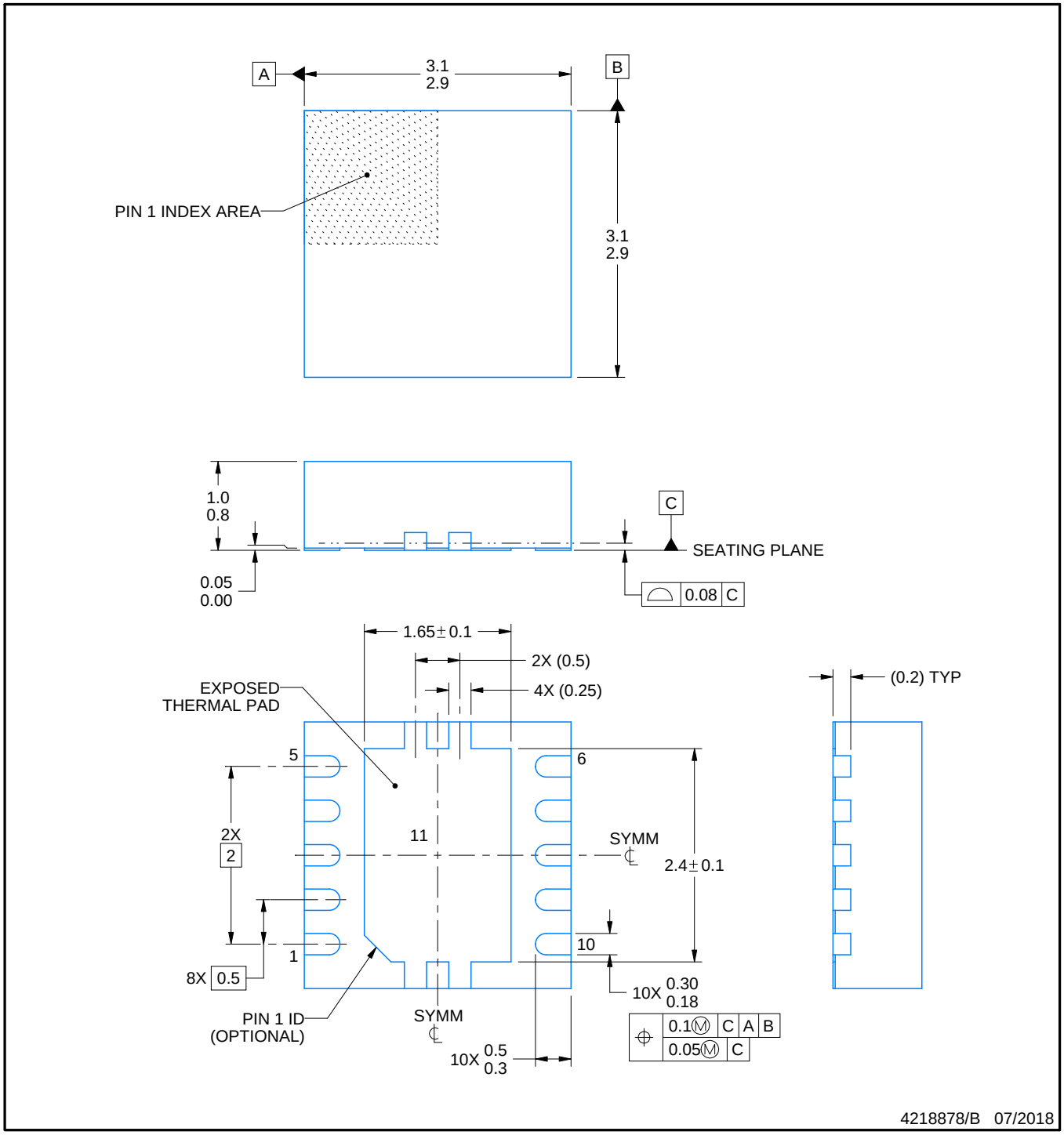

NOTES:

1. All linear dimensions are in millimeters. Any dimensions in parenthesis are for reference only. Dimensioning and tolerancing per ASME Y14.5M.
2. This drawing is subject to change without notice.
3. The package thermal pad must be soldered to the printed circuit board for optimal thermal and mechanical performance.

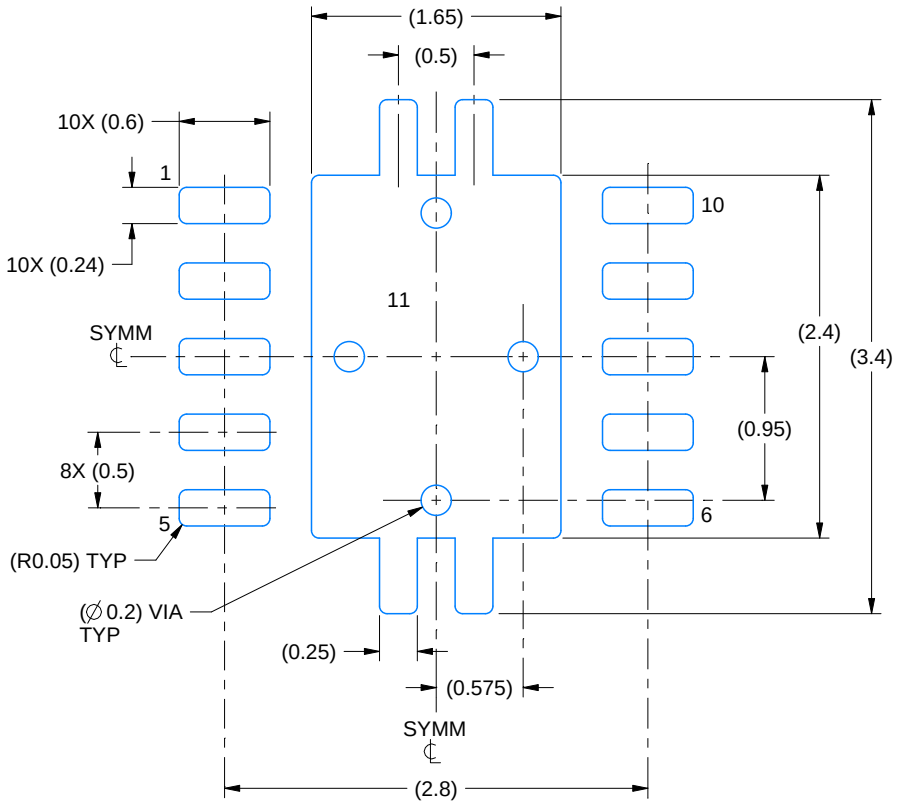

LAND PATTERN EXAMPLE
EXPOSED METAL SHOWN
SCALE:20X

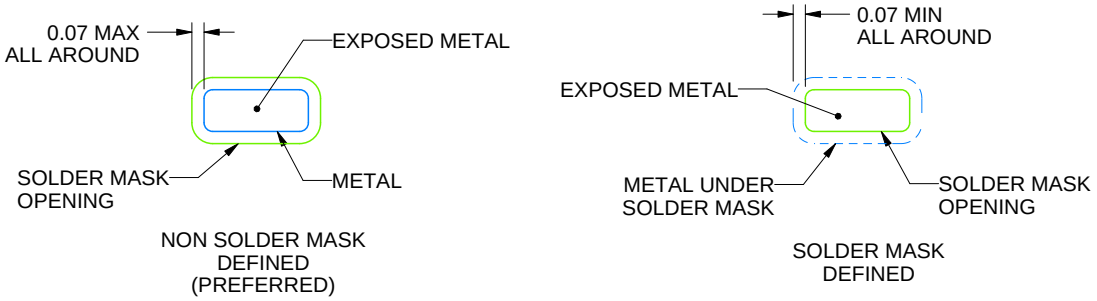

SOLDER MASK DETAILS

4218878/B 07/2018

NOTES: (continued)

4. This package is designed to be soldered to a thermal pad on the board. For more information, see Texas Instruments literature number SLUA271 (www.ti.com/lit/slua271).
5. Vias are optional depending on application, refer to device data sheet. If any vias are implemented, refer to their locations shown on this view. It is recommended that vias under paste be filled, plugged or tented.

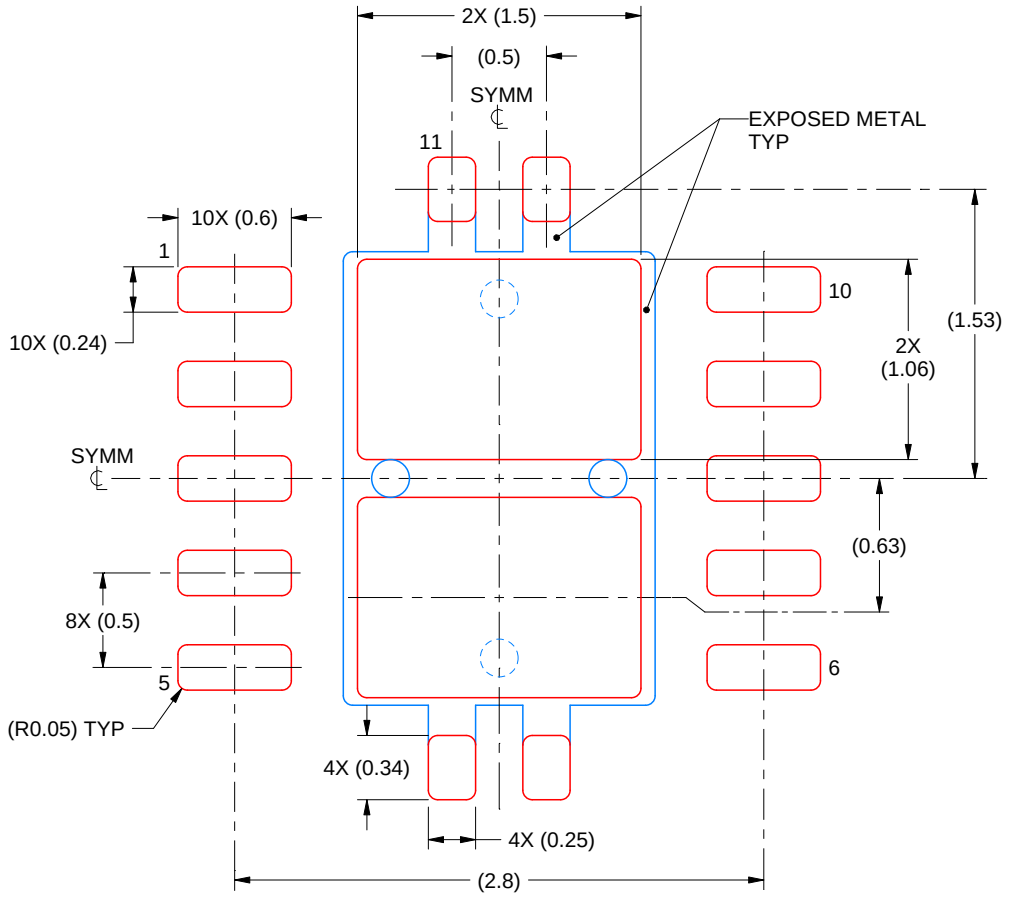

SOLDER PASTE EXAMPLE
BASED ON 0.125 mm THICK STENCIL

EXPOSED PAD 11:
80% PRINTED SOLDER COVERAGE BY AREA
SCALE:25X

4218878/B 07/2018

NOTES: (continued)

6. Laser cutting apertures with trapezoidal walls and rounded corners may offer better paste release. IPC-7525 may have alternate design recommendations.

IMPORTANT NOTICE AND DISCLAIMER

TI PROVIDES TECHNICAL AND RELIABILITY DATA (INCLUDING DATASHEETS), DESIGN RESOURCES (INCLUDING REFERENCE DESIGNS), APPLICATION OR OTHER DESIGN ADVICE, WEB TOOLS, SAFETY INFORMATION, AND OTHER RESOURCES “AS IS” AND WITH ALL FAULTS, AND DISCLAIMS ALL WARRANTIES, EXPRESS AND IMPLIED, INCLUDING WITHOUT LIMITATION ANY IMPLIED WARRANTIES OF MERCHANTABILITY, FITNESS FOR A PARTICULAR PURPOSE OR NON-INFRINGEMENT OF THIRD PARTY INTELLECTUAL PROPERTY RIGHTS.

These resources are intended for skilled developers designing with TI products. You are solely responsible for (1) selecting the appropriate TI products for your application, (2) designing, validating and testing your application, and (3) ensuring your application meets applicable standards, and any other safety, security, or other requirements. These resources are subject to change without notice. TI grants you permission to use these resources only for development of an application that uses the TI products described in the resource. Other reproduction and display of these resources is prohibited. No license is granted to any other TI intellectual property right or to any third party intellectual property right. TI disclaims responsibility for, and you will fully indemnify TI and its representatives against, any claims, damages, costs, losses, and liabilities arising out of your use of these resources.

TI’s products are provided subject to TI’s Terms of Sale (www.ti.com/legal/termsofsale.html) or other applicable terms available either on ti.com or provided in conjunction with such TI products. TI’s provision of these resources does not expand or otherwise alter TI’s applicable warranties or warranty disclaimers for TI products.

Mailing Address: Texas Instruments, Post Office Box 655303, Dallas, Texas 75265
Copyright © 2020, Texas Instruments Incorporated