FAIRCHILD™

Is Now Part of

ON Semiconductor®

To learn more about ON Semiconductor, please visit our website at
www.onsemi.com

Please note: As part of the Fairchild Semiconductor integration, some of the Fairchild orderable part numbers will need to change in order to meet ON Semiconductor's system requirements. Since the ON Semiconductor product management systems do not have the ability to manage part nomenclature that utilizes an underscore (_), the underscore (_) in the Fairchild part numbers will be changed to a dash (-). This document may contain device numbers with an underscore (_). Please check the ON Semiconductor website to verify the updated device numbers. The most current and up-to-date ordering information can be found at www.onsemi.com. Please email any questions regarding the system integration to Fairchild_questions@onsemi.com.

ON Semiconductor and the ON Semiconductor logo are trademarks of Semiconductor Components Industries, LLC dba ON Semiconductor or its subsidiaries in the United States and/or other countries. ON Semiconductor owns the rights to a number of patents, trademarks, copyrights, trade secrets, and other intellectual property. A listing of ON Semiconductor's product/patent coverage may be accessed at www.onsemi.com/site/pdf/Patent-Marking.pdf. ON Semiconductor reserves the right to make changes without further notice to any products herein. ON Semiconductor makes no warranty, representation or guarantee regarding the suitability of its products for any particular purpose, nor does ON Semiconductor assume any liability arising out of the application or use of any product or circuit, and specifically disclaims any and all liability, including without limitation special, consequential or incidental damages. Buyer is responsible for its products and applications using ON Semiconductor products, including compliance with all laws, regulations and safety requirements or standards, regardless of any support or applications information provided by ON Semiconductor. "Typical" parameters which may be provided in ON Semiconductor data sheets and/or specifications can and do vary in different applications and actual performance may vary over time. All operating parameters, including "Typicals" must be validated for each customer application by customer's technical experts. ON Semiconductor does not convey any license under its patent rights nor the rights of others. ON Semiconductor products are not designed, intended, or authorized for use as a critical component in life support systems or any FDA Class 3 medical devices or medical devices with a same or similar classification in a foreign jurisdiction or any devices intended for implantation in the human body. Should Buyer purchase or use ON Semiconductor products for any such unintended or unauthorized application, Buyer shall indemnify and hold ON Semiconductor and its officers, employees, subsidiaries, affiliates, and distributors harmless against all claims, costs, damages, and expenses, and reasonable attorney fees arising out of, directly or indirectly, any claim of personal injury or death associated with such unintended or unauthorized use, even if such claim alleges that ON Semiconductor was negligent regarding the design or manufacture of the part. ON Semiconductor is an Equal Opportunity/Affirmative Action Employer. This literature is subject to all applicable copyright laws and is not for resale in any manner.

December 2015

FSB70625
Motion SPM® 7 Series

Features

- UL Certified No. E209204 (UL1557)
- High Performance PQFN Package
- 250 V $R_{DS(on)}$ = 0.8 Ω(Max) FRFET MOSFET 3-Phase Inverter with Gate Drivers and Protection
- Separate Open-Source Pins from Low-Side MOSFETs for Three-Phase Current-Sensing
- Active-HIGH Interface, Works with 3.3 / 5 V Logic, Schmitt-trigger Input
- Optimized for Low Electromagnetic Interference
- HVIC Temperature-Sensing Built-In for Temperature Monitoring
- HVIC for Gate Driving with Under-Voltage Protection and Interlock Function
- Isolation Rating: 1500 V_{rms} / min.
- Moisture Sensitive Level (MSL) 3
- RoHS Compliant

Application

- 3-Phase Inverter Driver for Small Power AC Motor Drives

Related Source

- *AN-9077 - Motion SPM® 7 Series User's Guide*
- *AN-9078 - Surface Mount Guidelines for Motion SPM® 7 Series*

General Description

The FSB70625 is an advanced Motion SPM® 7 module providing a fully-featured, high-performance inverter output stage for AC Induction, BLDC and PMSM motors. These modules integrate optimized gate drive of the built-in MOSFETs (FRFET® technology) to minimize EMI and losses, while also providing multiple on-module protection features including under-voltage lockouts, thermal monitoring, fault reporting and interlock function. The built-in one HVIC translates the incoming logic-level gate inputs to the high-voltage, high-current drive signals required to properly drive the module's internal MOSFETs. Separate open-souce MOSFET terminals are available for each phase to support the widest variety of control algorithms.

3D Package Drawing (Click to Activate 3D Content)

Package Marking & Ordering Information

Device Marking	Device	Package	Reel Size	Tape Width	Quantity
FSB70625	FSB70625	PQFN27A	13"	24 mm	1000 units

Absolute Maximum Ratings

Inverter Part (each MOSFET unless otherwise specified.)

Symbol	Parameter	Conditions	Rating	Unit
V_{DSS}	Drain-Source Voltage of Each MOSFET		250	V
$*I_{D\ 25}$	Each MOSFET Drain Current, Continuous	T_{CB} = 25°C (1st Note 1)	6.9	A
$*I_{D\ 80}$	Each MOSFET Drain Current, Continuous	T_{CB} = 80°C	5.2	A
$*I_{DP}$	Each MOSFET Drain Current, Peak	T_{CB} = 25°C, PW < 100 µs	13.9	A
$*P_D$	Maximum Power Dissipation	T_{CB} = 25°C, For Each MOSFET	81	W

Control Part (each HVIC unless otherwise specified.)

Symbol	Parameter	Conditions	Rating	Unit
V_{DD}	Control Supply Voltage	Applied Between V_{DD} and COM	20	V
V_{BS}	High-side Bias Voltage	Applied Between V_B and V_S	20	V
V_{IN}	Input Signal Voltage	Applied Between IN and COM	-0.3 ~ V_{DD} + 0.3	V
V_{FO}	Fault Output Supply Voltage	Applied Between FO and COM	-0.3 ~ V_{DD} + 0.3	V
I_{FO}	Fault Output Current	Sink Current FO Pin	5	mA
V_{CSC}	Current Sensing Input Voltage	Applied Between Csc and COM	-0.3 ~ V_{DD} + 0.3	V

Total System

Symbol	Parameter	Conditions	Rating	Unit
T_J	Operating Junction Temperature		-40 ~ 150	°C
T_{STG}	Storage Temperature		-40 ~ 125	°C
V_{ISO}	Isolation Voltage	60 Hz, Sinusoidal, 1 Minute, Connection Pins to Heat Sink Plate	1500	V_{rms}

1st Notes:

1. T_{CB} is pad temperature of case bottom.
2. Marking " * " is calculation value or design factor.

Pin descriptions

Pin Number	Pin Name	Pin Description
1	/FO	Fault Output
2	V_{TS}	Voltage Output of HVIC Temperature
3	Cfod	Capacitor for Duration of Fault Output
4	Csc	Capacitor (Low-pass Filter) for Short-circuit Current Detection Input
5	V_{DD}	Supply Bias Voltage for IC and MOSFETs Driving
6	IN_UH	Signal Input for High-side U Phase
7	IN_VH	Signal Input for High-side V Phase
8 (8a)	COM	Common Supply Ground
9	IN_WH	Signal Input for High-side W Phase
10	IN_UL	Signal Input for Low-side U Phase
11	IN_VL	Signal Input for Low-side V Phase
12	IN_WL	Signal Input for Low-side W Phase
13	Nu	Negative DC-Link Input for U Phase
14	U	Output for U Phase
15	Nv	Negative DC-Link Input for V Phase
16	V	Output for V Phase
17	W	Output for W Phase
18	Nw	Negative DC-Link Input for W Phase
19	$V_{S(W)}$	High-side Bias Voltage Ground for W phase Mosfet driving
20	P_W	Positive DC-Link Input for W Phase
21	P_V	Positive DC-Link Input for V Phase
22	P_U	Positive DC-Link Input for U Phase
23 (23a)	$V_{S(V)}$	High-side Bias Voltage Ground for V phase Mosfet driving
24 (24a)	$V_{S(U)}$	High-side Bias Voltage Ground for U phase Mosfet driving
25	$V_{B(U)}$	High-side Bias Voltage for U phase Mosfet driving
26	$V_{B(V)}$	High-side Bias Voltage for V phase Mosfet driving
27	$V_{B(W)}$	High-side Bias Voltage for W phase Mosfet driving

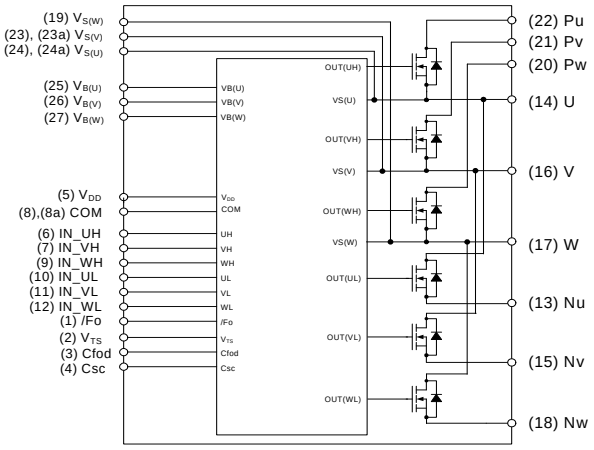

Figure 1. Pin Configuration and Internal Block Diagram

1st Notes:

4. Source terminal of each low-side MOSFET is not connected to supply ground or bias voltage ground inside Motion SPM® 7 product. External connections should be made as indicated in Figure 2.
5. The suffix -a pad is connected with same number pin. ex) 8 and 8a is connected inside.

Electrical Characteristics (T_J = 25°C, V_{DD} = V_{BS} = 15 V unless otherwise specified.)

Inverter Part (each MOSFET unless otherwise specified.)

Symbol	Parameter	Conditions	Min	Typ	Max	Unit
BV_{DSS}	Drain - Source Breakdown Voltage	V_{IN} = 0 V, I_D = 1 mA (2nd Note 1)	250	-	-	V
I_{DSS}	Zero Gate Voltage Drain Current	V_{IN} = 0 V, V_{DS} = 250 V	-	-	1	mA
$R_{DS(on)}$	Static Drain - Source Turn-On Resistance	V_{DD} = V_{BS} = 15 V, V_{IN} = 5 V, I_D = 1.0 A	-	0.7	0.8	Ω
V_{SD}	Drain - Source Diode Forward Voltage	V_{DD} = V_{BS} = 15V, V_{IN} = 0 V, I_D = -1.0 A	-	0.9	1.2	V
t_{ON}	Switching Times	V_{PN} = 150 V, V_{DD} = V_{BS} = 15 V, I_D = 1.0 A V_{IN} = 0 V ↔ 5 V, Inductive Load L = 3 mH Low-Side MOSFET Switching (2nd Note 2)	-	495	-	ns
$t_{D(ON)}$			-	415	-	ns
t_{OFF}			-	370	-	ns
$t_{D(OFF)}$			-	275	-	ns
I_{rr}			-	1.8	-	A
t_{rr}			-	70	-	ns
E_{ON}			-	20	-	μJ
E_{OFF}			-	1.7	-	μJ

Control Part (each HVIC unless otherwise specified.)

Symbol	Parameter	Conditions		Min	Typ	Max	Units
I_{QDD}	Quiescent V_{DD} Current	V_{DD}=15V, V_{IN}=0V	V_{DD} - COM	-	1.7	3.0	mA
I_{QBS}	Quiescent V_{BS} Current	V_{BS}=15V, V_{IN}=0V	$V_{B(X)}$-$V_{S(X)}$,$V_{B(V)}$-$V_{S(V)}$, $V_{B(W)}$-$V_{S(W)}$	-	45	70	μA
I_{PDD}	Operating V_{DD} Current	V_{DD}=15V,F_{PWM}=20kHz, duty=50%, PWM signal input for Low side	V_{DD} - COM	-	1.9	3.2	mA
I_{PBS}	Operating V_{BS} Current	V_{BS}=15V,F_{PWM}=20kHz, duty=50%, PWM signal input for High side	$V_{B(U)}$-$V_{S(U)}$,$V_{B(V)}$-$V_{S(V)}$, $V_{B(W)}$-$V_{S(W)}$	-	300	400	μA
UV_{DDD}	Low-side Undervoltage Protection (Figure 6)	V_{DD} Undervoltage Protection Detection Level		7.4	8.0	9.4	V
UV_{DDR}		V_{DD} Undervoltage Protection Reset Level		8.0	8.9	9.8	V
UV_{BSD}	High-side Undervoltage Protection (Figure 7)	V_{BS} Undervoltage Protection Detection Level		7.4	8.0	9.4	V
UV_{BSR}		V_{BS} Undervoltage Protection Reset Level		8.0	8.9	9.8	V
V_{TS}	HVIC Temperature sensing voltage output	V_{DD}=15V, T_{HVIC}=25°C (2nd Note 3)		580	675	770	mV
V_{IH}	ON Threshold Voltage	Logic High Level	IN - COM	-	-	2.4	V
V_{IL}	OFF Threshold Voltage	Logic Low Level		0.8	-	-	V
$V_{SC(ref)}$	SC Current Trip Level	V_{DD}=15V	C_{SC} - COM	0.45	0.5	0.55	V
t_{FOD}	Fault-out Pulse Width	C_{FOD}=33nF (2nd Note 4)		1.0	1.4	1.8	ms

2nd Notes:

1. BV_{DSS} is the absolute maximum voltage rating between drain and source terminal of each MOSFET inside Motion SPM® 7 product. V_{PN} should be sufficiently less than this value considering the effect of the stray inductance so that V_{PN} should not exceed BV_{DSS} in any case.
2. t_{ON} and t_{OFF} include the propagation delay of the internal drive IC. Listed values are measured at the laboratory test condition, and they can be different according to the field applications due to the effect of different printed circuit boards and wirings. Please see Figure 3 for the switching time definition with the switching test circuit of Figure 4.
3. V_{TS} is only for sensing-temperature of module and cannot shutdown MOSFETs automatically.
4. The fault-out pulse width t_{FOD} depends on the capacitance value of C_{FOD} according to the following approximate equation : $C_{FOD} = 24 \times 10^{-6} \times t_{FOD}$ [F]

Recommended Operating Condition

Symbol	Parameter	Conditions	Min.	Typ.	Max.	Unit
V_{PN}	Supply Voltage	Applied Between P and N	-	150	200	V
V_{DD}	Control Supply Voltage	Applied Between V_{DD} and COM	13.5	15.0	16.5	V
V_{BS}	High-Side Bias Voltage	Applied Between V_B and V_S	13.5	15.0	16.5	V
dV_{DD}/dt, dV_{BS}/dt	Control Supply Variation		-1.0	-	1.0	V/µs
t_{dead}	Blanking Time for Preventing Arm-Short	$V_{DD} = V_{BS} = 13.5 \sim 16.5$ V, $T_J \leq 150°C$	500	-	-	ns
f_{PWM}	PWM Switching Frequency	$T_J \leq 150°C$	-	15	-	kHz

Thermal Resistance

Symbol	Parameter	Conditions	Min.	Typ.	Max.	Unit
$R_{\theta JCB}$	Junction to Case Bottom Thermal Resistance	Single MOSFET Operating Condition (3rd Notes 1)	-	1.2	-	°C/W

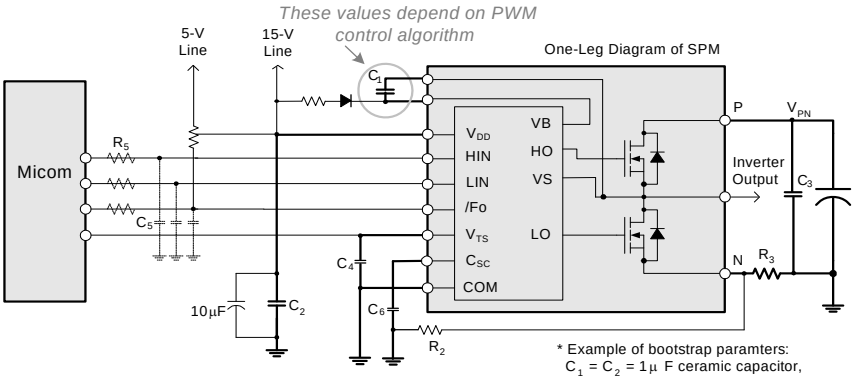

Figure 2. Recommended MCU Interface and Bootstrap Circuit with Parameters

3rd Notes:

1. $R_{\theta JCB}$ is simulation value with application board layout. (Please refer user's guide SPM7 series)
2. Parameters for bootsrap circuit elements are dependent on PWM algorithm. For 15 kHz of switching frequency, typical example of parameters is shown above.
3. RC coupling(R_5 and C_5) at each input (indicated as dotted lines) may be used to prevent improper input signal due to surge noise. Signal input of SPM® is compatible with standard CMOS or LSTTL outptus.
4. Bold lines should be short and thick in PCB pattern to have small stray inductance of circuit, which results in the reduction of surge voltage.

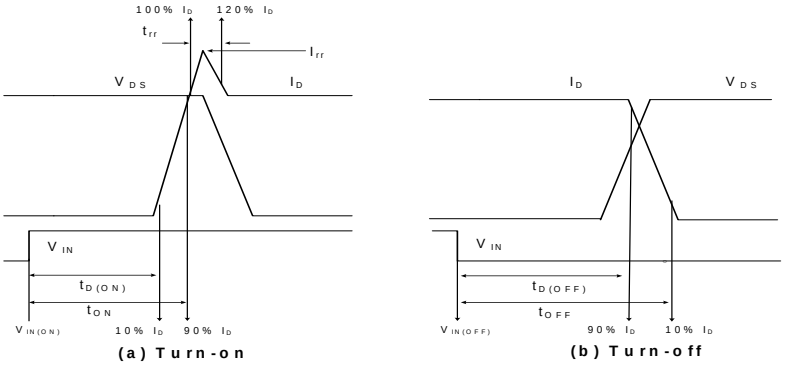

Figure 3. Switching Time Definition

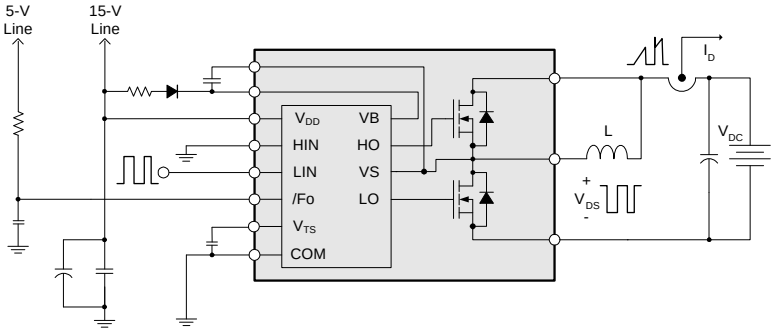

Figure 4. Switching Test Circuit (Low-side)

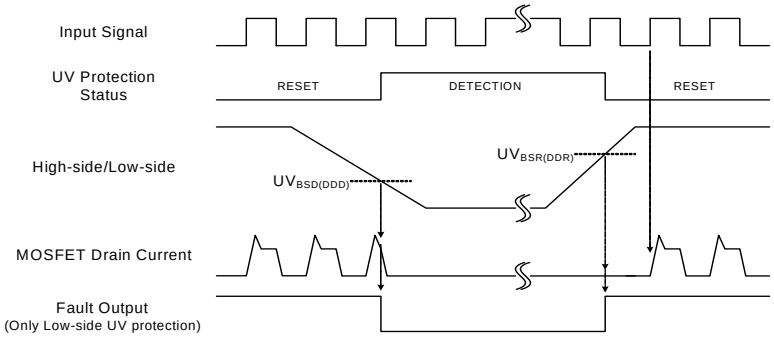

Figure 5. Under Voltage Protection

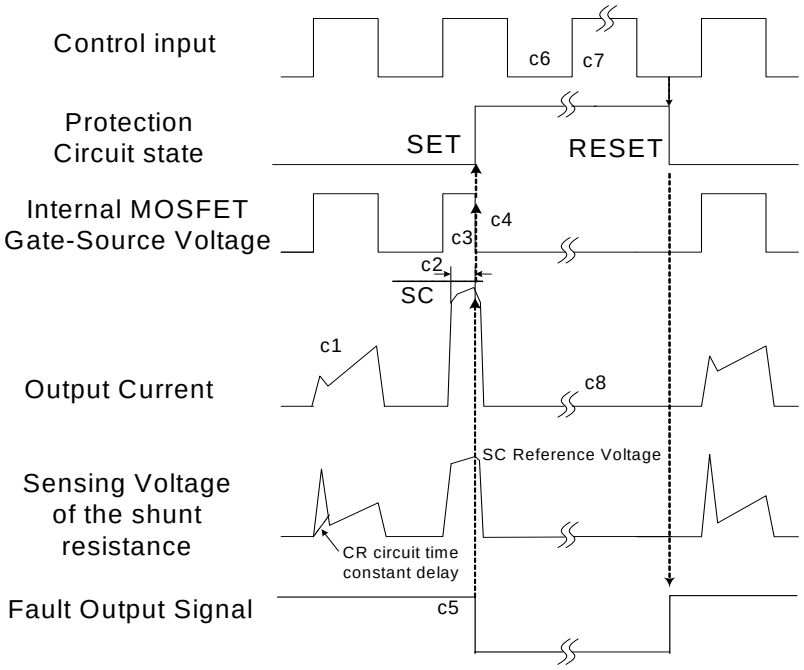

Figure 6. Short-Circuit Current Protection

(with the external shunt resistance and CR connection)

c1 : Normal operation: MOSFET ON and carrying current.

c2 : Short circuit current detection (SC trigger).

c3 : Hard MOSFET gate interrupt.

c4 : MOSFET turns OFF.

c5 : Fault output timer operation start : Fault-out width (t_{FOD})

c6 : Input “L” : MOSFET OFF state.

c7 : Input “H”: MOSFET ON state, but during the active period of fault output the MOSFET doesn’t turn ON.

c8 : MOSFET OFF state

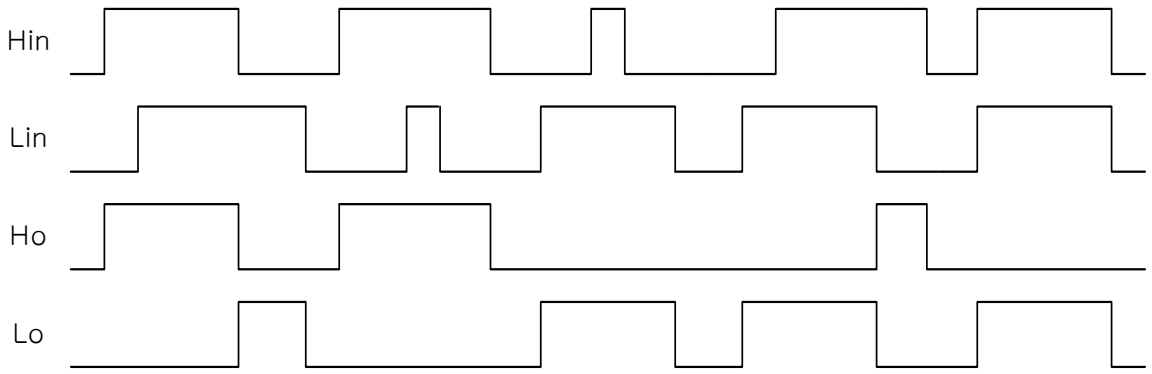

Figure 7. Timing Chart of Interlock Function

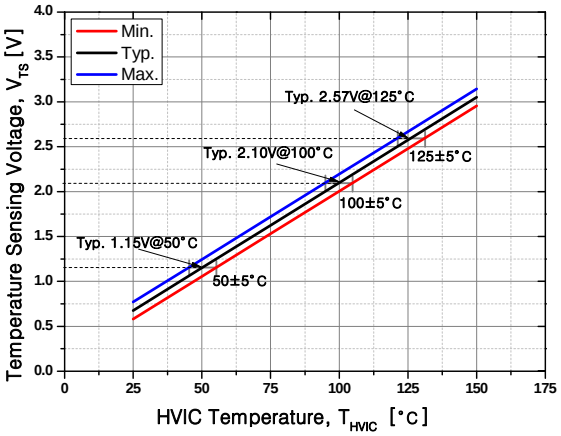

Figure 8. Temperature profile V_{TS} vs. T_{HVIC}

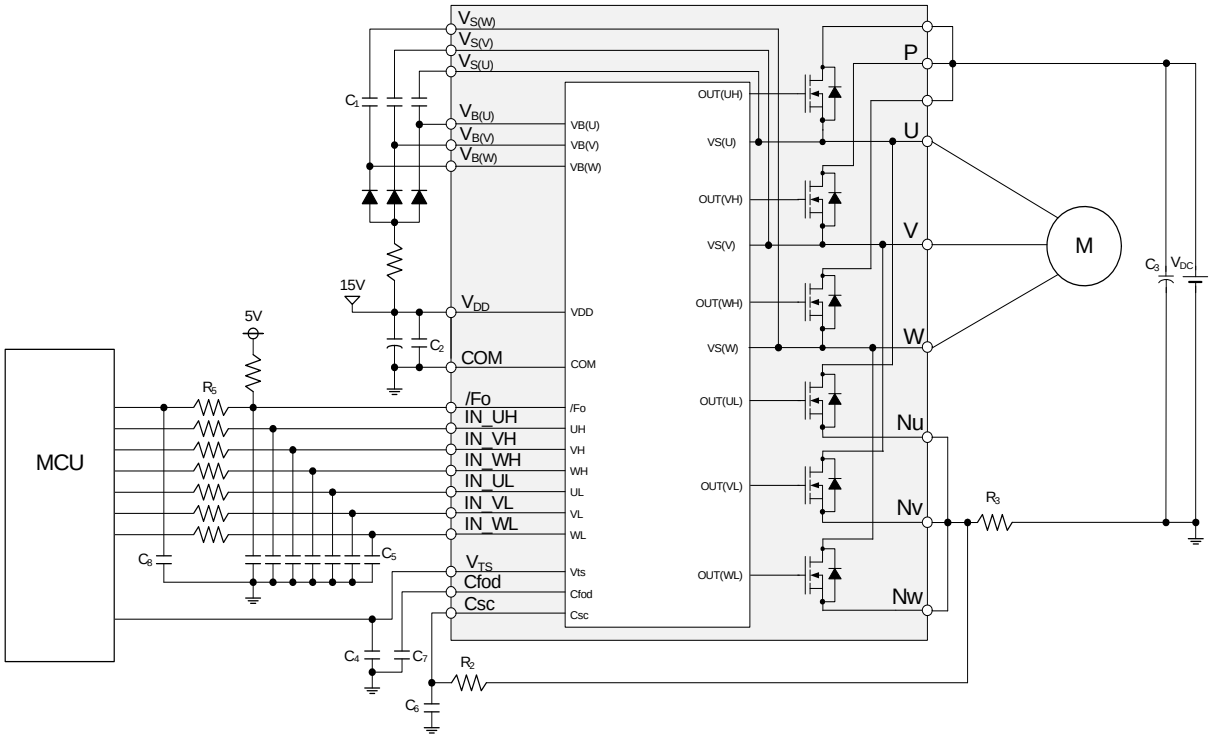

Figure 9. Example of Application Circuit

4th Notes:

1. RC-coupling (R_5 and C_5, R_2 and C_6) and C_1, C_5, C_7, C_8 at each input of Motion SPM® 7 product and MCU are useful to prevent improper input signal caused by surge-noise.
2. Ground-wires and output terminals, should be thick and short in order to avoid surge-voltage and malfunction of HVIC.
3. All the filter capacitors should be connected close to Motion SPM 7 product, and they should have good characteristics for rejecting high-frequency ripple current.

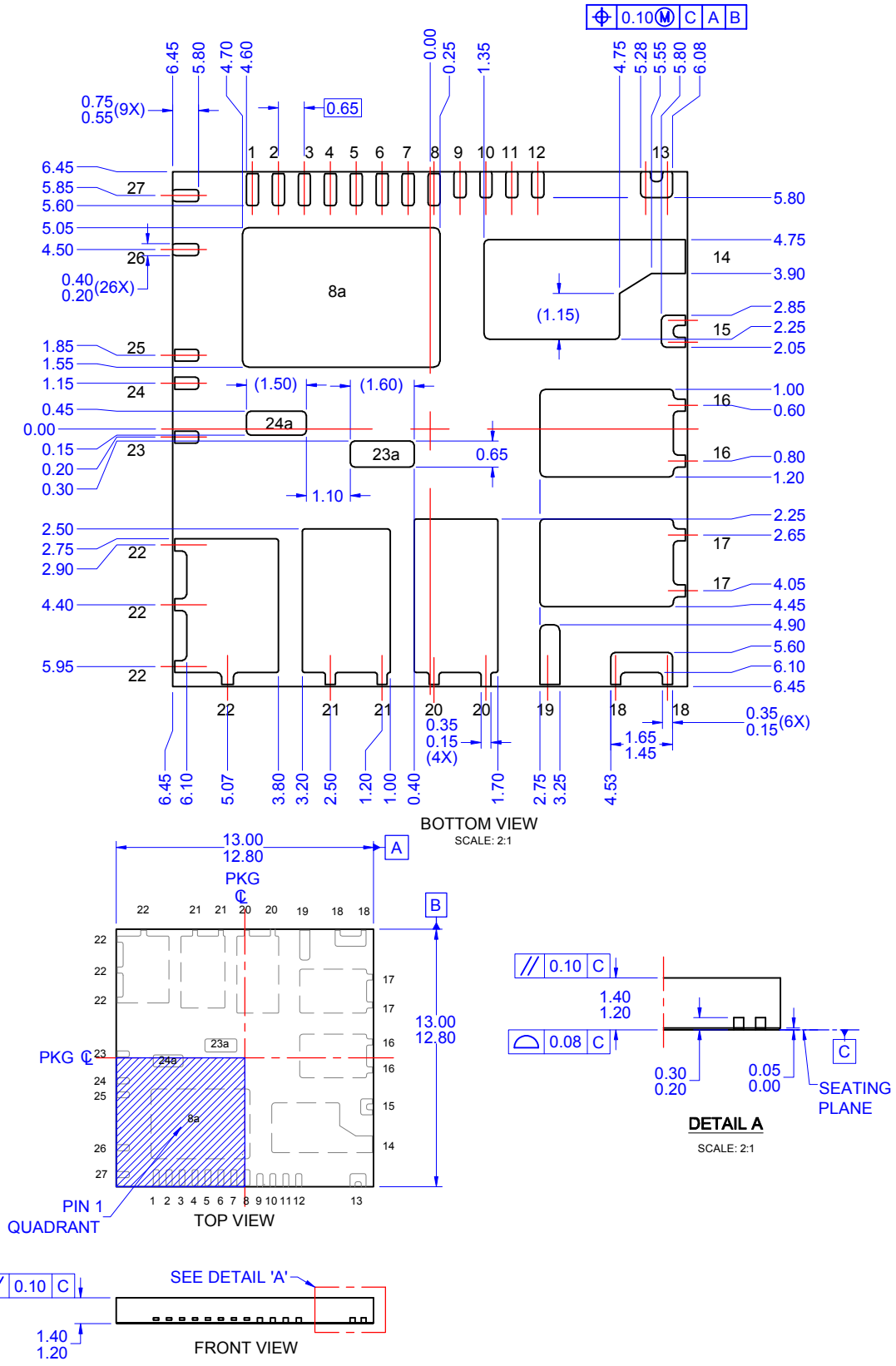
0.10 M C A B
0.75
0.55 (9X)
0.65
8a
(1.15)
(1.50)
(1.60)
24a
23a
0.65
1.10
0.40
0.20 (26X)
0.35
0.15 (4X)
1.65
1.45
0.35
0.15 (6X)
BOTTOM VIEW
SCALE: 2:1
13.00
12.80
PKG ℄
PIN 1
QUADRANT
TOP VIEW
0.10 C
1.40
1.20
0.08 C
0.30
0.20
0.05
0.00
SEATING
PLANE
DETAIL A
SCALE: 2:1
SEE DETAIL 'A'
FRONT VIEW

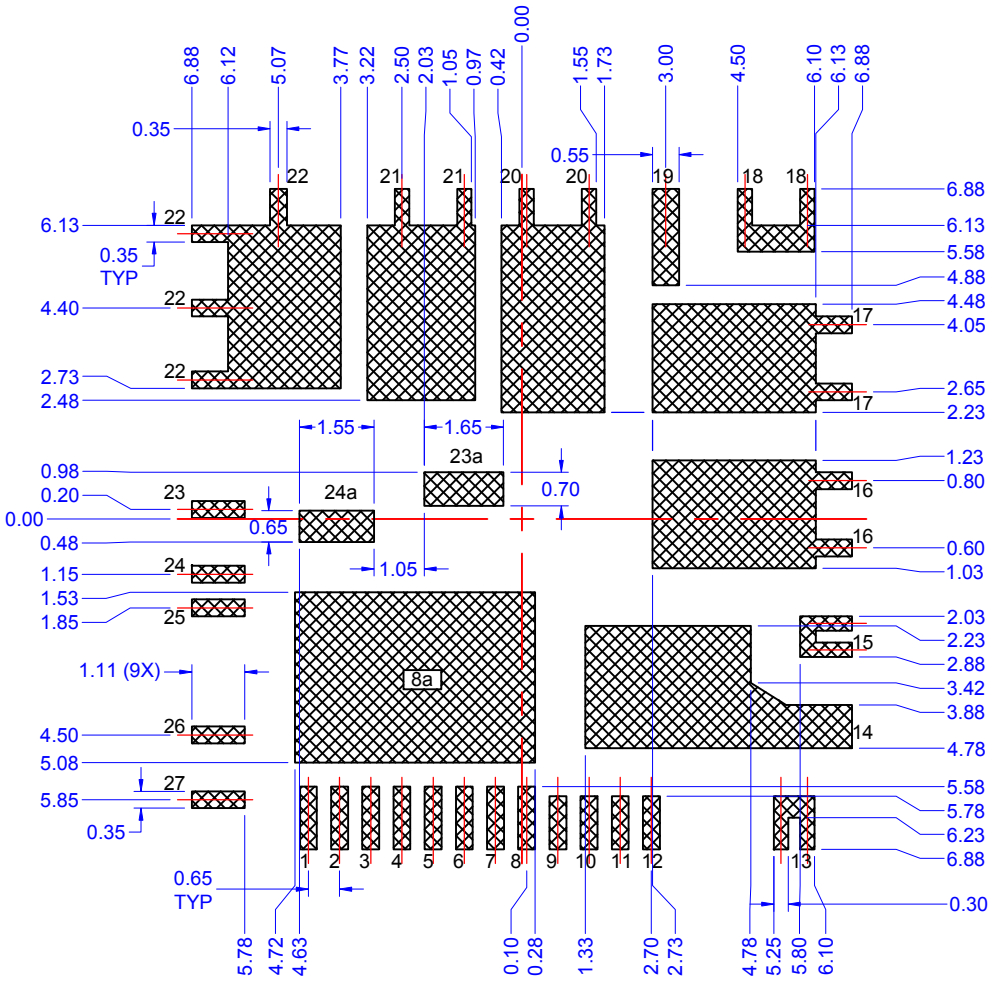

LAND PATTERN
RECOMMENDATION
SCALE: 2:1

NOTES: UNLESS OTHERWISE SPECIFIED

A) THIS PACKAGE IS NOT PRESENTLY REGISTERED TO ANY STANDARD COMMITTEE.

B) DIMENSIONS DO NOT INCLUDE BURRS OR MOLD FLASH. MOLD FLASH OR BURRS DOES NOT EXCEED 0.10MM.

C) ALL DIMENSIONS ARE IN MILLIMETERS.

D) DRAWING CONFORMS TO ASME Y14.5M-1994.

E) LAND PATTERN REFERENCE: QFN65P1290X1290X140-40N-40N

F) DRAWING FILE NAME: MKT-PQFN27AREV3.

G) IT IS NOT NECESSARY TO SOLDER 23a AND 24a, AND CAN BE OMITTED FROM THE FOOTPRINT

H) FAIRCHILD SEMICONDUCTOR

ON Semiconductor and ON are trademarks of Semiconductor Components Industries, LLC dba ON Semiconductor or its subsidiaries in the United States and/or other countries. ON Semiconductor owns the rights to a number of patents, trademarks, copyrights, trade secrets, and other intellectual property. A listing of ON Semiconductor's product/patent coverage may be accessed at www.onsemi.com/site/pdf/Patent−Marking.pdf. ON Semiconductor reserves the right to make changes without further notice to any products herein. ON Semiconductor makes no warranty, representation or guarantee regarding the suitability of its products for any particular purpose, nor does ON Semiconductor assume any liability arising out of the application or use of any product or circuit, and specifically disclaims any and all liability, including without limitation special, consequential or incidental damages. Buyer is responsible for its products and applications using ON Semiconductor products, including compliance with all laws, regulations and safety requirements or standards, regardless of any support or applications information provided by ON Semiconductor. "Typical" parameters which may be provided in ON Semiconductor data sheets and/or specifications can and do vary in different applications and actual performance may vary over time. All operating parameters, including "Typicals" must be validated for each customer application by customer's technical experts. ON Semiconductor does not convey any license under its patent rights nor the rights of others. ON Semiconductor products are not designed, intended, or authorized for use as a critical component in life support systems or any FDA Class 3 medical devices or medical devices with a same or similar classification in a foreign jurisdiction or any devices intended for implantation in the human body. Should Buyer purchase or use ON Semiconductor products for any such unintended or unauthorized application, Buyer shall indemnify and hold ON Semiconductor and its officers, employees, subsidiaries, affiliates, and distributors harmless against all claims, costs, damages, and expenses, and reasonable attorney fees arising out of, directly or indirectly, any claim of personal injury or death associated with such unintended or unauthorized use, even if such claim alleges that ON Semiconductor was negligent regarding the design or manufacture of the part. ON Semiconductor is an Equal Opportunity/Affirmative Action Employer. This literature is subject to all applicable copyright laws and is not for resale in any manner.

PUBLICATION ORDERING INFORMATION

LITERATURE FULFILLMENT:
Literature Distribution Center for ON Semiconductor
19521 E. 32nd Pkwy, Aurora, Colorado 80011 USA
Phone: 303−675−2175 or 800−344−3860 Toll Free USA/Canada
Fax: 303−675−2176 or 800−344−3867 Toll Free USA/Canada
Email: orderlit@onsemi.com

N. American Technical Support: 800−282−9855 Toll Free USA/Canada
Europe, Middle East and Africa Technical Support:
Phone: 421 33 790 2910
Japan Customer Focus Center
Phone: 81−3−5817−1050

ON Semiconductor Website: **www.onsemi.com**

Order Literature: http://www.onsemi.com/orderlit

For additional information, please contact your local Sales Representative