TC650/TC651

Tiny Integrated Temperature Sensor & Brushless DC Fan Controller with Overtemperature Alert

Features

- Integrated Temperature Sensing and Multi-speed Fan Control
- Built-in Overtemperature Alert ($T_{\overline{OVER}}$)
- Temperature-proportional Fan Speed Control for Acoustic Noise Reduction and Longer Fan Life
- Pulse Width Modulation (PWM) Output Drive for Cost and Power Savings
- Solid-state Temperature Sensing
- ±1°C (typ.) Accuracy from 25°C to +70°C
- Operating Range: 2.8V – 5.5V
- **TC651** includes Automatic Fan Shutdown
- Low Operating Current: 50 µA (typ.)

Applications

- Thermal Protection For Personal Computers
- Digital Set-Top Boxes
- Notebook Computers
- Data Communications
- Power Supplies
- Projectors

Related Literature

- Application Note 771 (DS00771)

General Description

The TC650/TC651 are integrated temperature sensors and brushless DC fan speed controllers. The TC650/TC651 measure the junction temperature and control the speed of the fan based on that temperature, making them especially suited for applications in modern electronic equipment.

Temperature data is converted from the on-chip thermal sensing element and translated into a fractional fan speed from 40% to 100%. A temperature selection guide in the data sheet is used to choose the low and high temperature limits to control the fan. The TC650/TC651 also include a single trip point over-temperature alert ($T_{\overline{OVER}}$) that eliminates the need for additional temperature sensors. In addition, the TC651 features an auto fan shutdown function for additional power savings.

The TC650/TC651 are easy to use, require no software overhead and are, therefore, the ideal choice for implementing thermal management in a variety of systems.

Package Type

8-Pin MSOP

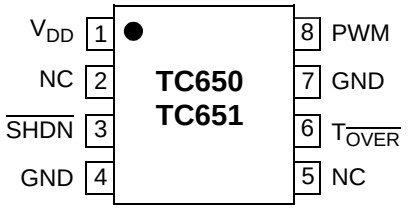

© 2001-2012 Microchip Technology Inc.

Typical Application Circuit

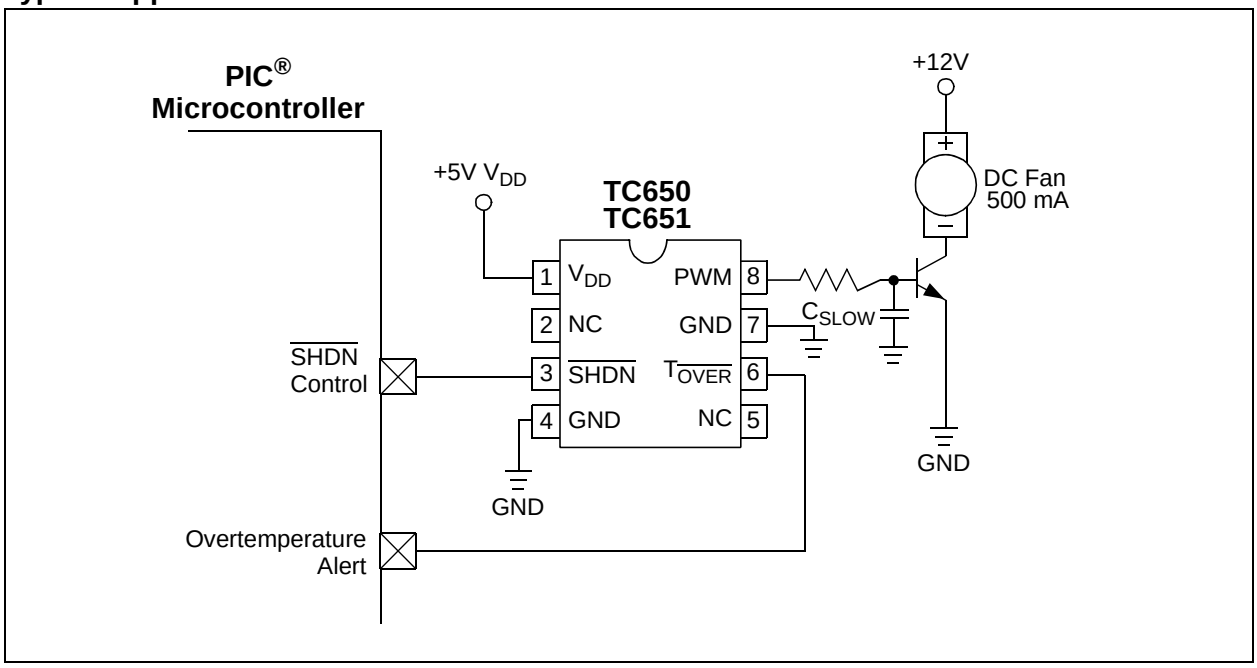

© 2001-2012 Microchip Technology Inc.

1.0 ELECTRICAL CHARACTERISTICS

Absolute Maximum Ratings†

Input Voltage (V_{DD} to GND) ..... +6V

Output Voltage (OUT to GND) 6V

Voltage On Any Pin ..... (GND – 0.3V) to (V_{DD} + 0.3V)

Operating Temperature Range ..... –40°C to +125°C

Storage Temperature ..... –65°C to +150°C

† **Notice:** Stresses above those listed under "Absolute Maximum Ratings" may cause permanent damage to the device. These are stress ratings only and functional operation of the device at these or any other conditions above those indicated in the operation sections of the specifications is not implied. Exposure to Absolute Maximum Rating conditions for extended periods may affect device reliability.

DC CHARACTERISTICS

Electrical Specifications: Unless otherwise specified, V_{DD} = 2.8V to 5.5V, $\overline{SHDN}$ = V_{DD}, T_A = –40°C to +125°C.						
Parameters	**Sym**	**Min**	**Typ**	**Max**	**Units**	**Conditions**
Supply Voltage	V_{DD}	2.8	—	5.5	V	
Supply Current	I_{DD}	—	50	90	µA	PWM, $T_{\overline{OVER}}$ are open
$\overline{SHDN}$ Input						
$\overline{SHDN}$ Input High Threshold	V_{IH}	65	—	—	%V_{DD}	
$\overline{SHDN}$ Input Low Threshold	V_{IL}	—	—	15	%V_{DD}	
PWM Output						
PWM Output Low Voltage	V_{OL}	—	—	0.3	V	I_{SINK} = 1 mA
PWM Output High Voltage	V_{OH}	V_{DD} – 0.5	—	—	V	I_{SOURCE} = 5 mA
PWM Rise Time	t_R	—	10	—	µs	I_{OH} = 5 mA, 1 nF from PWM to GND
PWM Fall Time	t_F	—	10	—	µs	I_{OL} = 1 mA, 1 nF from PWM to GND
PWM Frequency	f_{OUT}	10	15	—	Hz	
Start-up Time	$t_{STARTUP}$	—	32/f_{OUT}	—	sec	V_{DD} Rises from GND or $\overline{SHDN}$ Released
Temperature Accuracy						
High Temperature Accuracy	$T_{H\ ACC}$	T_H – 3	T_H	T_H + 3	°C	**Note 1**
Temperature Range Accuracy	$(T_H - T_L)_{ACC}$	–1.0	—	+1.0	°C	$(T_H - T_L) \leq 20°C$
		–2.5	—	+2.5	°C	$(T_H - T_L) \geq 20°C$
Auto-shutdown Hysteresis	T_{HYST}	—	$(T_H - T_L)/5$	—	°C	**TC651 Only**
$T_{\overline{OVER}}$ Output						
$T_{\overline{OVER}}$ Output High Voltage	V_{HIGH}	V_{DD} – 0.5	—	—	V	I_{SOURCE} = 1.2 mA
$T_{\overline{OVER}}$ Output Low Voltage	V_{LOW}	—	—	0.4	V	I_{SINK} = 2.5 mA
Absolute Accuracy	$T_{\overline{OVER}\ ACC}$	—	T_H + 10	—	°C	At Trip Point
Trip Point Hysteresis	$T_{\overline{OVER}\ HYST}$	—	5	—	°C	

Note 1: Transition from 90% to 100% Duty Cycle.

© 2001-2012 Microchip Technology Inc.

TEMPERATURE CHARACTERISTICS

Electrical Specifications: Unless otherwise noted, V_{DD} = 2.8V to 5.5V, $\overline{SHDN}$ = V_{DD}, T_A = -40°C to +125°C.						
Parameters	**Sym**	**Min**	**Typ**	**Max**	**Units**	**Conditions**
Temperature Ranges						
Specified Temperature Range	T_A	–40	—	+125	°C	
Maximum Junction Temperature	T_J	—	—	+150	°C	
Storage Temperature Range	T_A	–65	—	+150	°C	
Package Thermal Resistances						
Thermal Resistance, 8L-MSOP	θ_{JA}	—	206.3	—	°C/W	

© 2001-2012 Microchip Technology Inc.

2.0 TYPICAL PERFORMANCE CURVES

Note:	The graphs and tables provided following this note are a statistical summary based on a limited number of samples and are provided for informational purposes only. The performance characteristics listed herein are not tested or guaranteed. In some graphs or tables, the data presented may be outside the specified operating range (e.g., outside specified power supply range) and therefore outside the warranted range.

Note: Unless otherwise indicated, V_{DD} = 2.8V to 5.5V, $\overline{SHDN}$ = V_{DD}, T_A = –40°C to +125°C.

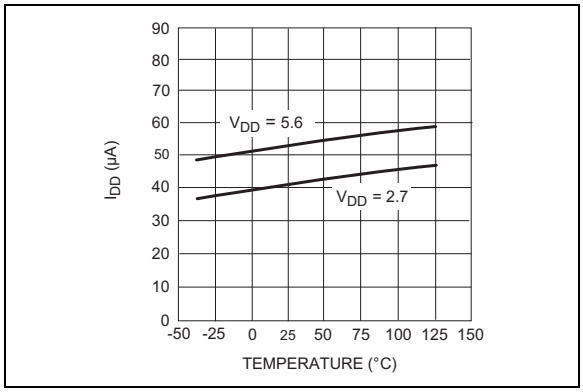

FIGURE 2-1: *I_{DD} vs. Temperature.*

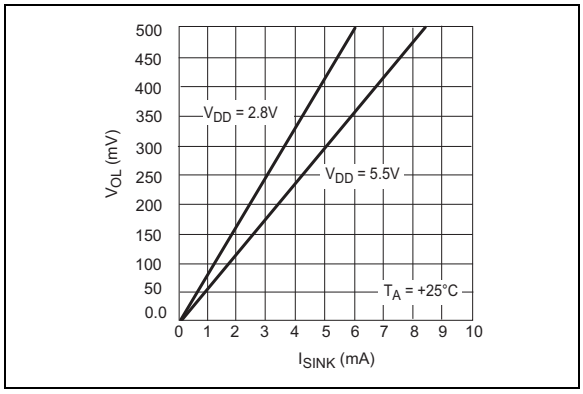

FIGURE 2-2: *PWM, I_{SINK} vs. V_{OL}.*

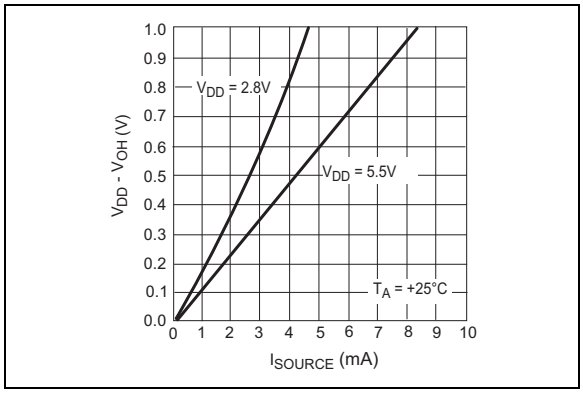

FIGURE 2-3: *$T_{\overline{OVER}}$, I_{SOURCE} vs. (V_{DD} – V_{OH}).*

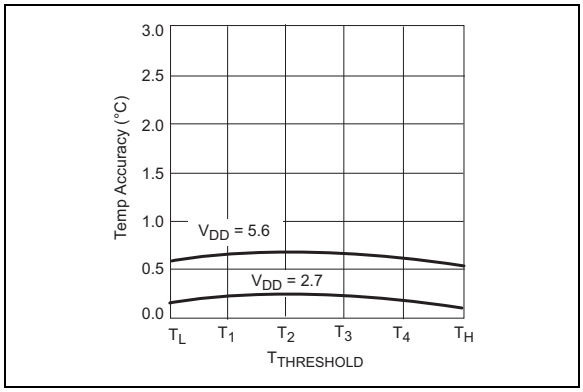

FIGURE 2-4: *Temperature Accuracy vs. V_{TH}.*

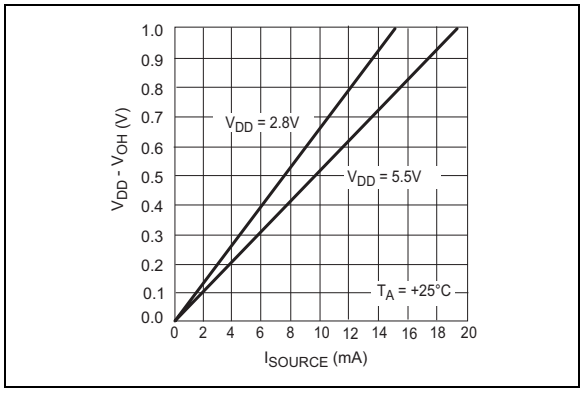

FIGURE 2-5: *PWM, I_{SOURCE} vs. (V_{DD} – V_{OH}).*

3.0 PIN DESCRIPTION

The descriptions of the pins are listed in Table 3-1.

TABLE 3-1: PIN FUNCTION TABLE

Pin No.	Symbol	Description
1	V_{DD}	Power Supply Input
2	NC	No Internal Connect
3	$\overline{SHDN}$	Fan Shutdown, Active-low Input 1 = Fan in normal operation 0 = Fan in shutdown
4	GND	Ground
5	NC	No Connect
6	$T_{\overline{OVER}}$	Overtemperature Alert, Active-low Output 1 = Overtemperature condition does not exist 0 = The device is in the overtemperature condition. The fan is driven at 100%. Potential exists for system over-heating
7	GND	Ground
8	PWM	PWM Fan Drive Output

3.1 Power Supply Input

May be independent of fan power supply.

3.2 Fan Shutdown, Active-low Input

During Shutdown mode, the chip still monitors temperature. $T_{\overline{OVER}}$ is low if temperature rises above factory set point.

3.3 Ground

Ground return for all TC650/TC651 functions.

3.4 Overtemperature Alert

Active-low output.

3.5 PWM Fan Drive Output

Pulse width modulated rail-to-rail logic output. Nominal frequency is 15 Hz.

© 2001-2012 Microchip Technology Inc.

4.0 DETAILED DESCRIPTION

The TC650/TC651 acquire and convert their junction temperature (T_J) information from an on-chip, solid-state sensor with a typical accuracy of ±1°C. The temperature data is digitally stored in an internal register. The register is compared with pre-defined threshold values. The six threshold values are equally distributed over a pre-defined range of temperatures (see Table 4-1). The TC650/TC651 control the speed of a DC brushless fan using a fractional speed-control scheme. The output stage requires only a 2N2222-type, small-signal BJT for fans up to 300 mA. For larger current fans (up to 1 amp), a logic-level N-channel MOSFET may be used. In addition to controlling the speed of the fan, the TC650/TC651 include an on-chip overtemperature alarm ($T_{\overline{OVER}}$) that gives a low signal when the temperature of the chip exceeds T_H by 10°C (typical). This feature eliminates the need for a separate temperature sensor for overtemperature monitoring. Figure 4-1 shows the block diagram of the device.

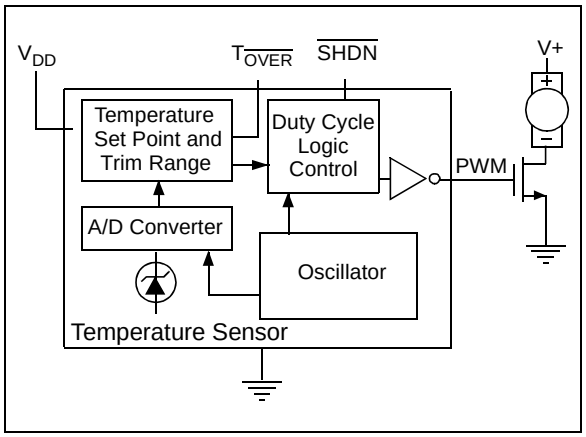

FIGURE 4-1: *Functional Block Diagram.*

4.1 PWM Output

The PWM pin is designed to drive a low-cost transistor or MOSFET as the low-side, power-switching element in the system. This output has an asymmetric complementary drive and is optimized for driving NPN transistors or N-channel MOSFETs. Since the system relies on PWM rather than linear power control, the dissipation in the power switch is kept to a minimum. Generally, very small devices (TO-92 or SOT packages) will suffice. The frequency of the PWM is about 15 Hz. The PWM is also the time base for the Start-up Timer (see **Section 4.2 "Start-Up Timer"**). The PWM duty cycle has a range of 40% to 100% for the TC650 and 50% to 100% for the TC651.

4.2 Start-Up Timer

To ensure reliable fan start-up, the Start-up Timer turns PWM high for about 2 seconds whenever the fan is started from the off state. This occurs at power-up and when coming out of Shutdown mode.

4.3 Overtemperature Alert ($T_{\overline{OVER}}$)

This pin goes low when the T_H set point is exceeded by 10°C (typical). This indicates that the fan is at maximum drive and the potential exists for system overheating; either heat dissipation in the system has gone beyond the cooling system's design limits or some fault exists (such as fan bearing failure or an airflow obstruction). This output may be treated as a "System Overheat" warning and be used to either trigger system shutdown or bring other fans in the system to full speed. The fan will continue to run at full speed while $T_{\overline{OVER}}$ is asserted. Built-in hysteresis prevents $T_{\overline{OVER}}$ from "chattering" when the measured temperature is at or near the T_H + 10°C trip point. As temperature falls through the T_H + 10°C trip point, hysteresis maintains the $T_{\overline{OVER}}$ output low until the measured temperature is 5°C above the trip point setting.

4.4 Shutdown ($\overline{SHDN}$)

The fan can be unconditionally shut down by pulling the $\overline{SHDN}$ pin low. During shutdown, the PWM output is low; ideal for notebook computers and other portable applications where you need to change batteries and must not have the fan running at that time. Thermal monitoring and $T_{\overline{OVER}}$ are still in operation during shutdown. I_{DD} shutdown current is around 50 µA.

4.5 Auto-shutdown Mode

The TC651 features auto-shutdown. When the temperature is below the factory set point at minimum speed (T_L), PWM is low and the fan is automatically shut off (Auto-shutdown mode). This feature is ideal for notebook computers and other portable equipment that need to conserve as much battery power as possible and, thus, run a fan when it is only absolutely needed. The TC651 will continue to be active in order to monitor temperature for $T_{\overline{OVER}}$. The TC651 exits Auto-shutdown mode when the temperature rises above the factory set point (T_1).

© 2001-2012 Microchip Technology Inc.

4.6 Temperature Selection Guide (Minimum Fan Speed/Full Speed)

There are two temperature thresholds that determine the characteristics of the device. The minimum fan speed temperature (T_L) and the full fan speed temperature (T_H). Depending on the TC65X device selected, when the temperature is below the T_L trip point, the PWM output will perform a different operation. For the TC650, the PWM will be driven at the minimum PWM frequency, while the TC651 will shut down the PWM (PWM = L).

T_L and T_H can be selected in 5°C increments. T_L can range from 25°C to 35°C. T_H can range from 35°C to 55°C and must be 10°C (or more) than the specified T_L.

The five temperature regions defined by the six thresholds are defined in the TC650/TC651 by means of factory trimming. Once a T_L and T_H are set, the T_1 – T_4 thresholds are automatically equally spaced between T_L and T_H. Table 4-1 shows these 5 regions and what the corresponding PWM duty cycle is.

TABLE 4-1: TEMPERATURE RANGE DEFINITION

Temperature ($T = T_J$) (Note 1)	PWM Duty Cycle	
	TC650 (Minimum Speed mode)	TC651 (Auto-shutdown mode)
$T < T_L$	40%	Off
$T_L <= T < T_1$	50%	50%
$T_1 <= T < T_2$	60%	60%
$T_2 <= T < T_3$	70%	70%
$T_3 <= T < T_4$	80%	80%
$T_4 <= T < T_H$	90%	90%
$T_H <= T < T_{OV}$	100%	100%
$T_{OV} <= T$	100% with Overtemperature Alert ($T_{\overline{OVER}}$ = L)	

Note 1: The temperature regions defined by the six temperature thresholds are predefined in the TC650/TC651 by means of factory trimming. Once a T_L and T_H are programmed, the T_1 – T_4 thresholds are automatically equally spaced between T_L and T_H.

Table 4-2 shows the device codes that specify the T_H and T_L temperature thresholds. The following examples are given to assist in understanding the device-ordering nomenclature.

Example 1: Suppose you wanted the fan to **run at 40% speed at 25°C** or less and go to **full-speed at 45°C.** You would order the part number TC650AEVUA.

Example 2: Suppose you wanted the fan to **turn on at 30°C** and go to **full speed at 45°C.** You would order the part number TC651BEVUA.

TABLE 4-2: DEVICE CODES FOR TEMPERATURE THRESHOLDS

Temp. Threshold Difference	T_L	T_H	Threshold Limits Code
10°C	25	35	AC (1)
	30	40	BD (2)
	35	45	CE (2)
15°C	25	40	AD (2)
	30	45	BE (1)
	35	50	CF (2)
20°C	25	45	AE (1)
	30	50	BF (2)
	35	55	CG (1)
30°C	25	55	AG (1)

Note 1: This temperature threshold option is available for ordering.

2: This is a custom temperature threshold option. Please contact the factory for more information.

© 2001-2012 Microchip Technology Inc.

5.0 TYPICAL APPLICATIONS

5.1 Reducing Switching Noise

For fans consuming more than 300 mA, a slowdown capacitor (C_{SLOW}) is recommended for reducing switching PWM induced noise (see Figure 5-1). The value of this capacitor should be 4.7 µF to 47 µF, depending on the fan current consumption.

See Application Note 771, “Suppressing Acoustic Noise in PWM Fan Speed Control Systems” (DS00771), for more information.

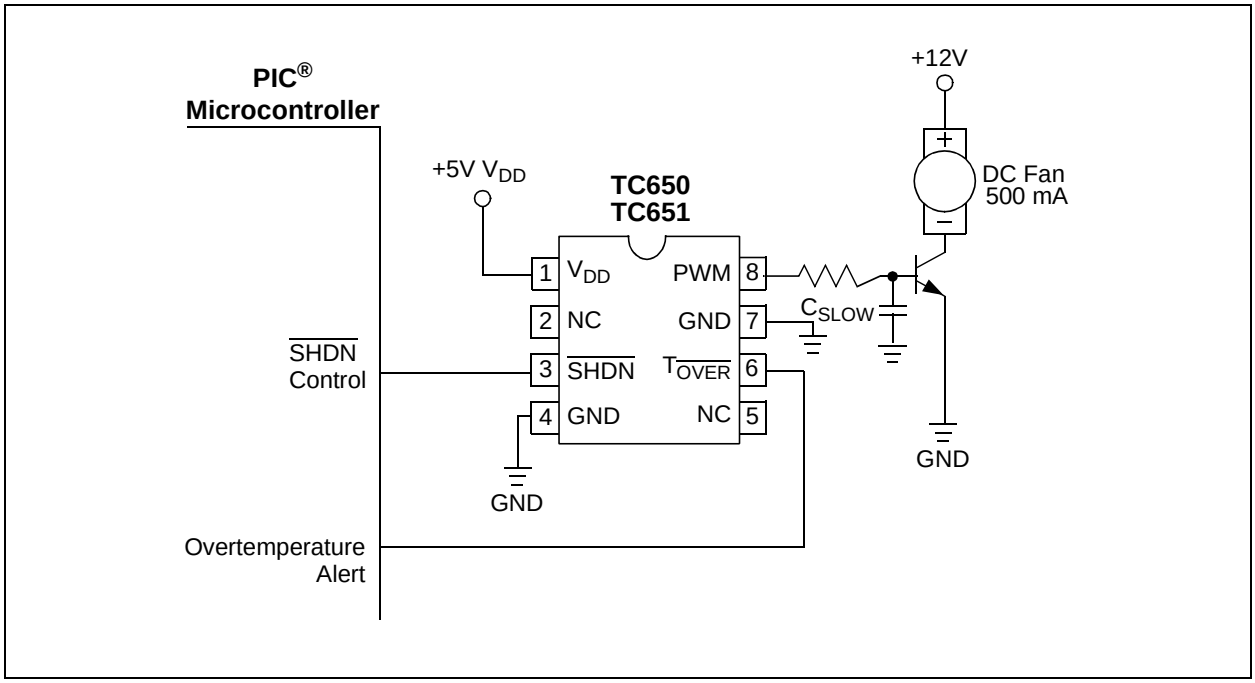

FIGURE 5-1: *Reducing Switching Noise.*

6.0 PACKAGING INFORMATION

6.1 Package Marking Information

8-Lead MSOP

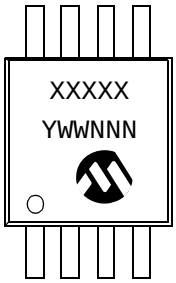

Example:

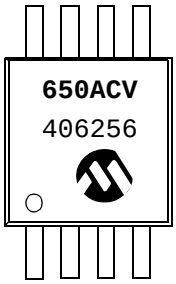

Legend:	XX...X	Customer-specific information
	Y	Year code (last digit of calendar year)
	YY	Year code (last 2 digits of calendar year)
	WW	Week code (week of January 1 is week ‘01’)
	NNN	Alphanumeric traceability code
	(e3)	Pb-free JEDEC designator for Matte Tin (Sn)
	*	This package is Pb-free. The Pb-free JEDEC designator ((e3)) can be found on the outer packaging for this package.

Note: In the event the full Microchip part number cannot be marked on one line, it will be carried over to the next line, thus limiting the number of available characters for customer-specific information.

© 2001-2012 Microchip Technology Inc.

8-Lead Plastic Micro Small Outline Package (MS) (MSOP)

Note: For the most current package drawings, please see the Microchip Packaging Specification located at http://www.microchip.com/packaging

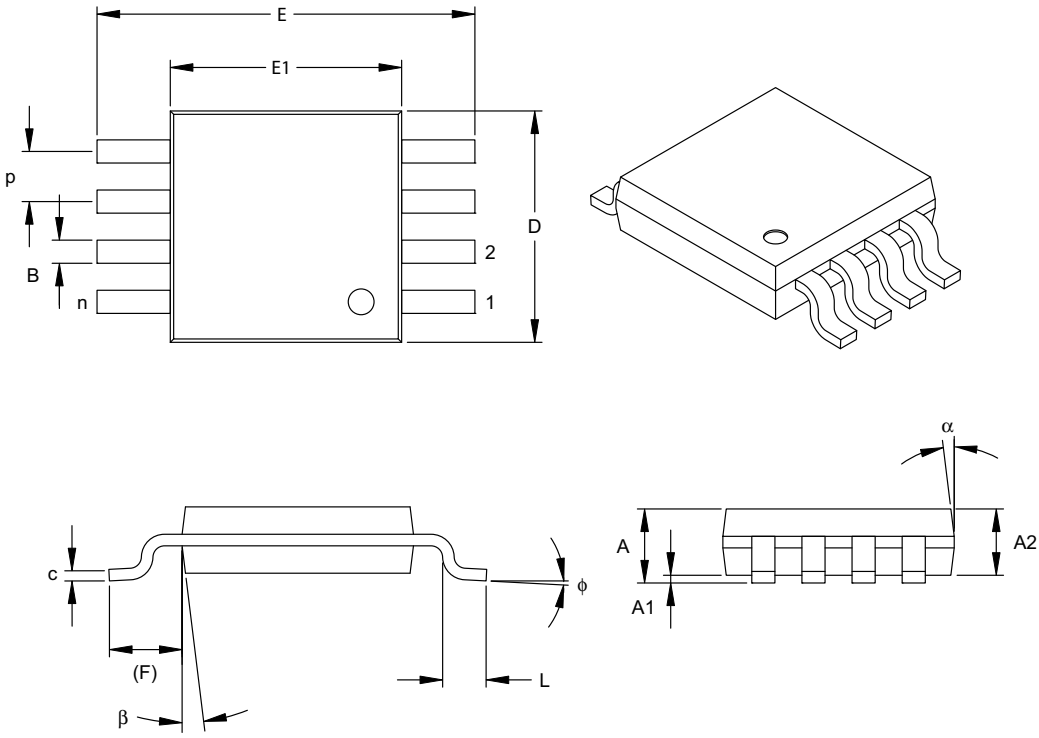

Units		INCHES			MILLIMETERS*		
Dimension Limits		MIN	NOM	MAX	MIN	NOM	MAX
Number of Pins	n		8			8	
Pitch	p		.026 BSC			0.65 BSC	
Overall Height	A	-	-	.043	-	-	1.10
Molded Package Thickness	A2	.030	.033	.037	0.75	0.85	0.95
Standoff	A1	.000	-	.006	0.00	-	0.15
Overall Width	E		.193 TYP.			4.90 BSC	
Molded Package Width	E1		.118 BSC			3.00 BSC	
Overall Length	D		.118 BSC			3.00 BSC	
Foot Length	L	.016	.024	.031	0.40	0.60	0.80
Footprint (Reference)	F		.037 REF			0.95 REF	
Foot Angle	φ	0°	-	8°	0°	-	8°
Lead Thickness	c	.003	.006	.009	0.08	-	0.23
Lead Width	B	.009	.012	.016	0.22	-	0.40
Mold Draft Angle Top	α	5°	-	15°	5°	-	15°
Mold Draft Angle Bottom	β	5°	-	15°	5°	-	15°

*Controlling Parameter

Notes:

Dimensions D and E1 do not include mold flash or protrusions. Mold flash or protrusions shall not exceed .010" (0.254mm) per side.

JEDEC Equivalent: MO-187

Drawing No. C04-111

6.2 Product Tape and Reel Specifications

FIGURE 6-1: EMBOSSED CARRIER DIMENSIONS

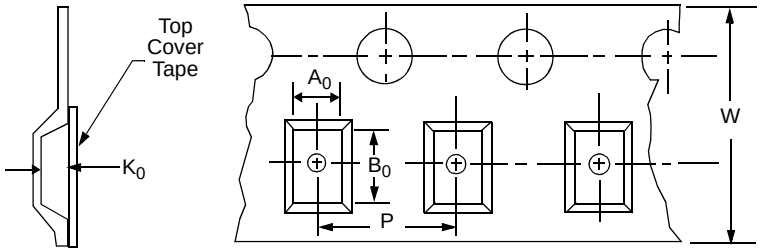

TABLE 1: CARRIER TAPE/CAVITY DIMENSIONS

Case Outline	Package Type		Carrier Dimensions		Cavity Dimensions			Output Quantity Units	Reel Diameter in mm
			W mm	P mm	A0 mm	B0 mm	K0 mm		
MS	MSOP	8L	12	8	5.3	3.6	1.4	2500	330

FIGURE 1: MSOP DEVICES

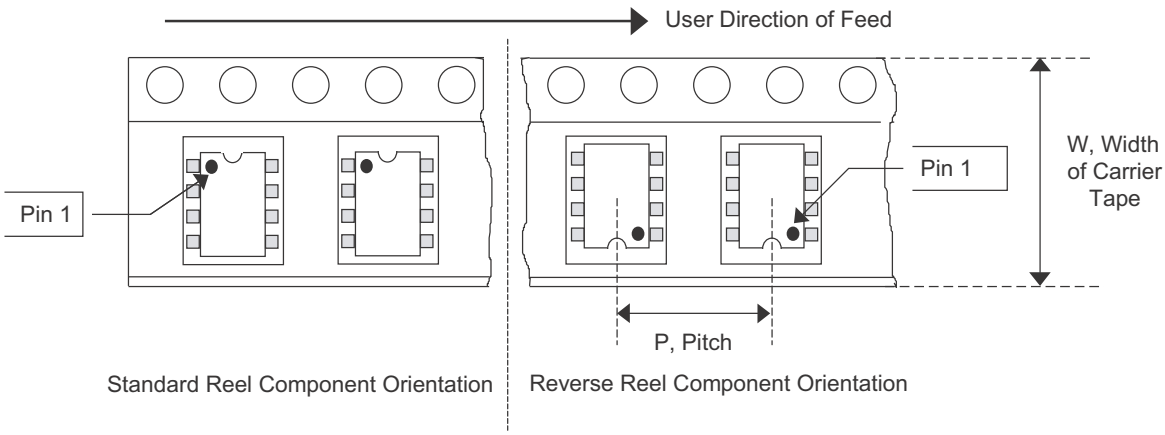

© 2001-2012 Microchip Technology Inc.

7.0 REVISION HISTORY

Revision D (December 2012)

Added a note to the package outline drawing.

NOTES:

© 2001-2012 Microchip Technology Inc.

PRODUCT IDENTIFICATION SYSTEM

To order or obtain information, e.g., on pricing or delivery, refer to the factory or the listed sales office.

PART NO.	XX	X	XX
Device	Temperature Threshold Limit	Temperature Range	Package

Device:
- TC650: Temp Sensor & Brushless DC Fan Controller / Overtemperature Alert (minimum speed)
- TC651: Temp Sensor & Brushless DC Fan Controller / Overtemperature Alert (auto shutdown)

Temperature Threshold Limit:

Temperature Difference	T_L (1,2)	T_H (1,3)	Threshold Limit Code
10°C	25	35	AC
	30	40	BD
	35	45	CE
15°C	25	40	AD
	30	45	BE
	35	50	CF
20°C	25	45	AE
	30	50	BF
	35	55	CG
30°C	25	55	AG

1. T_L and T_H can be selected in 5°C increments.
2. T_L can range from 25°C to 35°C.
3. T_H can range from 35°C to 55°C and must be at least 10°C higher than T_L.

Temperature Range: V = -40°C to +125°C (Extended)

Package:
- UA = Plastic Micro Small Outline (MSOP), 8-lead
- UATR = Plastic Micro Small Outline (MSOP), 8-lead (Tape and Reel)

Examples:

a) TC650ACVUA: Temp Sensor $T_L = 25$, $T_H = 35$
b) TC651ACVUATR: Temp Sensor $T_L = 25$, $T_H = 35$ Tape and Reel
c) TC650AEVUA: Temp Sensor $T_L = 25$, $T_H = 45$
d) TC651AGVUA: Temp Sensor $T_L = 25$, $T_H = 55$
e) TC650BEVUA: Temp Sensor $T_L = 30$, $T_H = 45$
f) TC651CGVUA: Temp Sensor $T_L = 35$, $T_H = 55$
g) TC650CGVUATR: Temp Sensor $T_L = 35$, $T_H = 55$ Tape and Reel

Sales and Support

Data Sheets
Products supported by a preliminary Data Sheet may have an errata sheet describing minor operational differences and recommended workarounds. To determine if an errata sheet exists for a particular device, please contact one of the following:

1. Your local Microchip sales office
2. The Microchip Worldwide Site (www.microchip.com)

Please specify which device, revision of silicon and Data Sheet (include Literature #) you are using.

Customer Notification System
Register on our web site (www.microchip.com/cn) to receive the most current information on our products.

NOTES:

© 2001-2012 Microchip Technology Inc.

Note the following details of the code protection feature on Microchip devices:

- Microchip products meet the specification contained in their particular Microchip Data Sheet.
- Microchip believes that its family of products is one of the most secure families of its kind on the market today, when used in the intended manner and under normal conditions.
- There are dishonest and possibly illegal methods used to breach the code protection feature. All of these methods, to our knowledge, require using the Microchip products in a manner outside the operating specifications contained in Microchip's Data Sheets. Most likely, the person doing so is engaged in theft of intellectual property.
- Microchip is willing to work with the customer who is concerned about the integrity of their code.
- Neither Microchip nor any other semiconductor manufacturer can guarantee the security of their code. Code protection does not mean that we are guaranteeing the product as "unbreakable."

Code protection is constantly evolving. We at Microchip are committed to continuously improving the code protection features of our products. Attempts to break Microchip's code protection feature may be a violation of the Digital Millennium Copyright Act. If such acts allow unauthorized access to your software or other copyrighted work, you may have a right to sue for relief under that Act.

Information contained in this publication regarding device applications and the like is provided only for your convenience and may be superseded by updates. It is your responsibility to ensure that your application meets with your specifications. MICROCHIP MAKES NO REPRESENTATIONS OR WARRANTIES OF ANY KIND WHETHER EXPRESS OR IMPLIED, WRITTEN OR ORAL, STATUTORY OR OTHERWISE, RELATED TO THE INFORMATION, INCLUDING BUT NOT LIMITED TO ITS CONDITION, QUALITY, PERFORMANCE, MERCHANTABILITY OR FITNESS FOR PURPOSE**.** Microchip disclaims all liability arising from this information and its use. Use of Microchip devices in life support and/or safety applications is entirely at the buyer's risk, and the buyer agrees to defend, indemnify and hold harmless Microchip from any and all damages, claims, suits, or expenses resulting from such use. No licenses are conveyed, implicitly or otherwise, under any Microchip intellectual property rights.

QUALITY MANAGEMENT SYSTEM
CERTIFIED BY DNV
═ ISO/TS 16949 ═

Trademarks

The Microchip name and logo, the Microchip logo, dsPIC, FlashFlex, KEELOQ, KEELOQ logo, MPLAB, PIC, PICmicro, PICSTART, PIC^{32} logo, rfPIC, SST, SST Logo, SuperFlash and UNI/O are registered trademarks of Microchip Technology Incorporated in the U.S.A. and other countries.

FilterLab, Hampshire, HI-TECH C, Linear Active Thermistor, MTP, SEEVAL and The Embedded Control Solutions Company are registered trademarks of Microchip Technology Incorporated in the U.S.A.

Silicon Storage Technology is a registered trademark of Microchip Technology Inc. in other countries.

Analog-for-the-Digital Age, Application Maestro, BodyCom, chipKIT, chipKIT logo, CodeGuard, dsPICDEM, dsPICDEM.net, dsPICworks, dsSPEAK, ECAN, ECONOMONITOR, FanSense, HI-TIDE, In-Circuit Serial Programming, ICSP, Mindi, MiWi, MPASM, MPF, MPLAB Certified logo, MPLIB, MPLINK, mTouch, Omniscient Code Generation, PICC, PICC-18, PICDEM, PICDEM.net, PICkit, PICtail, REAL ICE, rfLAB, Select Mode, SQI, Serial Quad I/O, Total Endurance, TSHARC, UniWinDriver, WiperLock, ZENA and Z-Scale are trademarks of Microchip Technology Incorporated in the U.S.A. and other countries.

SQTP is a service mark of Microchip Technology Incorporated in the U.S.A.

GestIC and ULPP are registered trademarks of Microchip Technology Germany II GmbH & Co. & KG, a subsidiary of Microchip Technology Inc., in other countries.

All other trademarks mentioned herein are property of their respective companies.

© 2001-2012, Microchip Technology Incorporated, Printed in the U.S.A., All Rights Reserved.

Printed on recycled paper.

ISBN: 9781620768310

Microchip received ISO/TS-16949:2009 certification for its worldwide headquarters, design and wafer fabrication facilities in Chandler and Tempe, Arizona; Gresham, Oregon and design centers in California and India. The Company's quality system processes and procedures are for its PIC® MCUs and dsPIC® DSCs, KEELOQ® code hopping devices, Serial EEPROMs, microperipherals, nonvolatile memory and analog products. In addition, Microchip's quality system for the design and manufacture of development systems is ISO 9001:2000 certified.

Worldwide Sales and Service

AMERICAS

Corporate Office
2355 West Chandler Blvd.
Chandler, AZ 85224-6199
Tel: 480-792-7200
Fax: 480-792-7277
Technical Support:
http://www.microchip.com/support
Web Address:
www.microchip.com

Atlanta
Duluth, GA
Tel: 678-957-9614
Fax: 678-957-1455

Boston
Westborough, MA
Tel: 774-760-0087
Fax: 774-760-0088

Chicago
Itasca, IL
Tel: 630-285-0071
Fax: 630-285-0075

Cleveland
Independence, OH
Tel: 216-447-0464
Fax: 216-447-0643

Dallas
Addison, TX
Tel: 972-818-7423
Fax: 972-818-2924

Detroit
Farmington Hills, MI
Tel: 248-538-2250
Fax: 248-538-2260

Indianapolis
Noblesville, IN
Tel: 317-773-8323
Fax: 317-773-5453

Los Angeles
Mission Viejo, CA
Tel: 949-462-9523
Fax: 949-462-9608

Santa Clara
Santa Clara, CA
Tel: 408-961-6444
Fax: 408-961-6445

Toronto
Mississauga, Ontario, Canada
Tel: 905-673-0699
Fax: 905-673-6509

ASIA/PACIFIC

Asia Pacific Office
Suites 3707-14, 37th Floor
Tower 6, The Gateway
Harbour City, Kowloon
Hong Kong
Tel: 852-2401-1200
Fax: 852-2401-3431

Australia - Sydney
Tel: 61-2-9868-6733
Fax: 61-2-9868-6755

China - Beijing
Tel: 86-10-8569-7000
Fax: 86-10-8528-2104

China - Chengdu
Tel: 86-28-8665-5511
Fax: 86-28-8665-7889

China - Chongqing
Tel: 86-23-8980-9588
Fax: 86-23-8980-9500

China - Hangzhou
Tel: 86-571-2819-3187
Fax: 86-571-2819-3189

China - Hong Kong SAR
Tel: 852-2943-5100
Fax: 852-2401-3431

China - Nanjing
Tel: 86-25-8473-2460
Fax: 86-25-8473-2470

China - Qingdao
Tel: 86-532-8502-7355
Fax: 86-532-8502-7205

China - Shanghai
Tel: 86-21-5407-5533
Fax: 86-21-5407-5066

China - Shenyang
Tel: 86-24-2334-2829
Fax: 86-24-2334-2393

China - Shenzhen
Tel: 86-755-8864-2200
Fax: 86-755-8203-1760

China - Wuhan
Tel: 86-27-5980-5300
Fax: 86-27-5980-5118

China - Xian
Tel: 86-29-8833-7252
Fax: 86-29-8833-7256

China - Xiamen
Tel: 86-592-2388138
Fax: 86-592-2388130

China - Zhuhai
Tel: 86-756-3210040
Fax: 86-756-3210049

ASIA/PACIFIC

India - Bangalore
Tel: 91-80-3090-4444
Fax: 91-80-3090-4123

India - New Delhi
Tel: 91-11-4160-8631
Fax: 91-11-4160-8632

India - Pune
Tel: 91-20-2566-1512
Fax: 91-20-2566-1513

Japan - Osaka
Tel: 81-6-6152-7160
Fax: 81-6-6152-9310

Japan - Tokyo
Tel: 81-3-6880- 3770
Fax: 81-3-6880-3771

Korea - Daegu
Tel: 82-53-744-4301
Fax: 82-53-744-4302

Korea - Seoul
Tel: 82-2-554-7200
Fax: 82-2-558-5932 or
82-2-558-5934

Malaysia - Kuala Lumpur
Tel: 60-3-6201-9857
Fax: 60-3-6201-9859

Malaysia - Penang
Tel: 60-4-227-8870
Fax: 60-4-227-4068

Philippines - Manila
Tel: 63-2-634-9065
Fax: 63-2-634-9069

Singapore
Tel: 65-6334-8870
Fax: 65-6334-8850

Taiwan - Hsin Chu
Tel: 886-3-5778-366
Fax: 886-3-5770-955

Taiwan - Kaohsiung
Tel: 886-7-213-7828
Fax: 886-7-330-9305

Taiwan - Taipei
Tel: 886-2-2508-8600
Fax: 886-2-2508-0102

Thailand - Bangkok
Tel: 66-2-694-1351
Fax: 66-2-694-1350

EUROPE

Austria - Wels
Tel: 43-7242-2244-39
Fax: 43-7242-2244-393

Denmark - Copenhagen
Tel: 45-4450-2828
Fax: 45-4485-2829

France - Paris
Tel: 33-1-69-53-63-20
Fax: 33-1-69-30-90-79

Germany - Munich
Tel: 49-89-627-144-0
Fax: 49-89-627-144-44

Italy - Milan
Tel: 39-0331-742611
Fax: 39-0331-466781

Netherlands - Drunen
Tel: 31-416-690399
Fax: 31-416-690340

Spain - Madrid
Tel: 34-91-708-08-90
Fax: 34-91-708-08-91

UK - Wokingham
Tel: 44-118-921-5869
Fax: 44-118-921-5820

11/29/12

© 2001-2012 Microchip Technology Inc.