REVISIONS				
ZONE	REV	DESCRIPTION	DATE	APPROVED
	A	PROTOTYPE RELEASE	05/14/09	D. K.
	B	ADD DETAILED PCI-E CONNECTOR INFO	08/31/09	D. K.
	C	ADD DETAILED INFO FOR J8&J9	09/21/09	D. K.
	D	FIX DIMENSION ERROR & ADD DETAIL INFO ON DRAWING	10/28/10	ALVIN.D
	E	FIX DIMENSION ERROR ADDED COLOR INFORMATION	09/27/11	L. S.

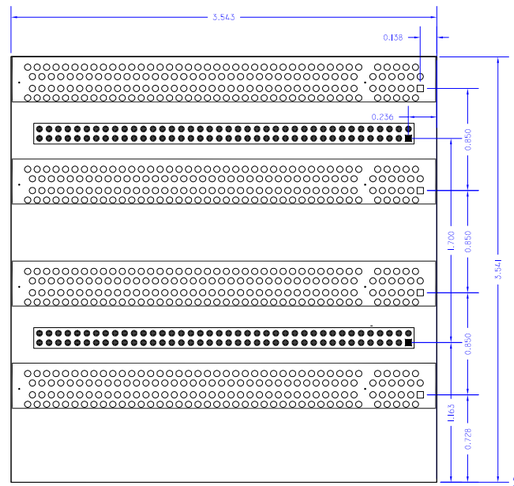

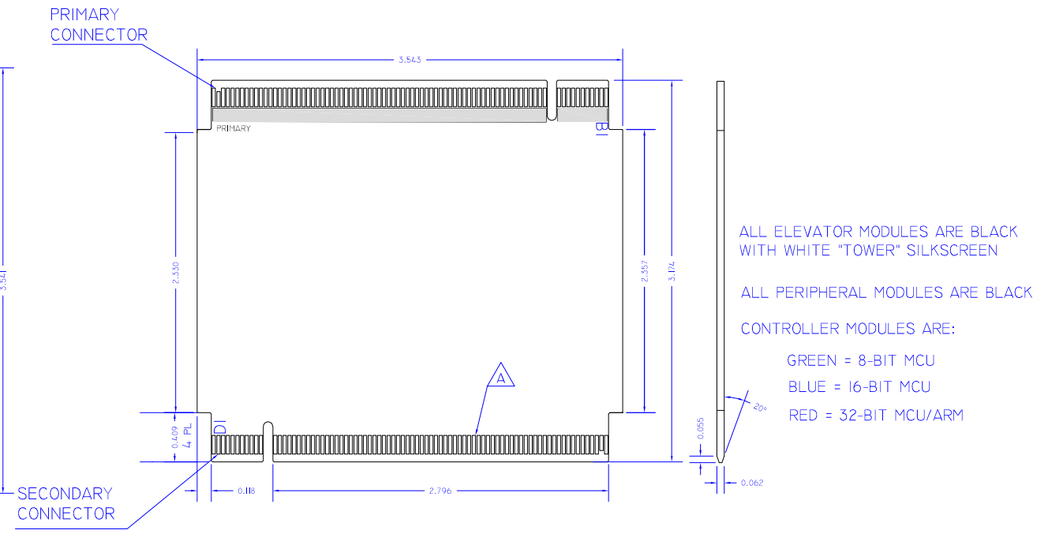

ALL ELEVATOR MODULES ARE BLACK WITH WHITE "TOWER" SILKSCREEN

ALL PERIPHERAL MODULES ARE BLACK

CONTROLLER MODULES ARE:

GREEN = 8-BIT MCU

BLUE = 16-BIT MCU

RED = 32-BIT MCU/ARM

A PLATING REQUIREMENT FOR GOLDFINGERS: 30U GOLD OVER 100~200U NICKEL

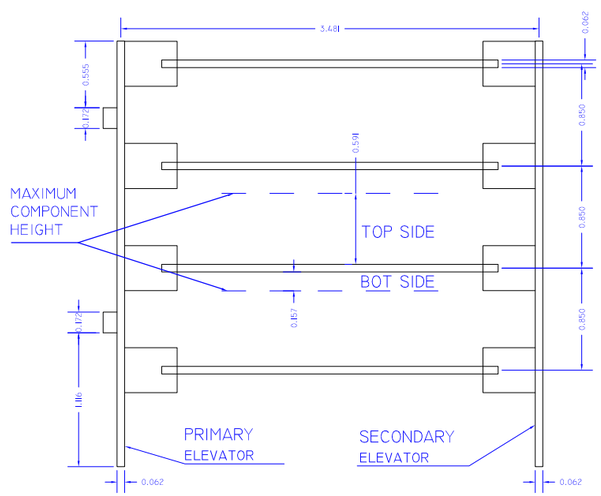

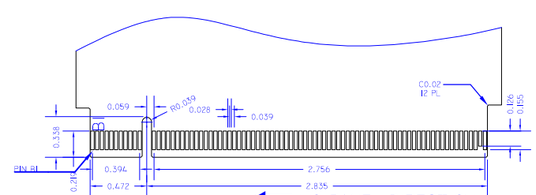

DETAILS OF PCI-E CONNECTOR COMPONENT SIDE

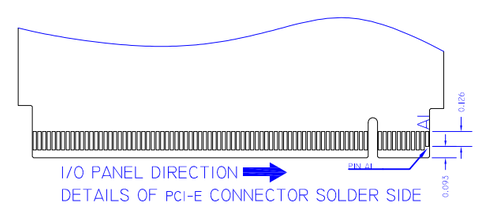

DETAILS OF PCI-E CONNECTOR SOLDER SIDE

UNLESS OTHERWISE SPECIFIED DIMENSIONS ARE IN INCHES.
TOLERANCES ARE:
DECIMALS
.XX ±.020
.XXX ±.010
√ RMS ALL MACHINED SURFACES
BREAK ALL SHARP EDGES AND CORNERS, REMOVE BURRS.
UNDERLINED DIM. NOT TO SCALE.
THIRD ANGLE ORTHOGRAPHIC PROJECTION IS USED.

MATERIAL

FINISH

HEAT TREAT

PART NO. 900-76126

ALL INFORMATION IS SUBJECT TO CHANGE WITHOUT NOTICE. NO WARRANTY, EXPRESSED OR APPLIED, IS MADE AS TO THE ACCURACY OF THE INFINFORMATION CONTAINED HEREIN. THIS DOCUMENT IS PROVIDED FOR REFERENCE PUTPOSES ONLY. CONTACT YOUR FREESCALE REPRESENTATIVE TO OBTAIN THE LATEST INFORMATION ON THIS PRODUCT.

___ PUBI (PUBLIC INFORMATION)
_X_ FIUO (FREESCALE INTERNAL USE ONLY)
___ FCP (FREESCALE CONFIDENTIAL PROPRIETARY)

APPROVALS		DATE
DRAWN	ALVIN.D	10/28/10
CHECKED	BOBBY ZHAO	10/28/10
DESIGN ENGINEER	DANIEL KRUCZEK	09/21/09

freescale semiconductor
6501 WILLIAM CANNON DRIVE
AUSTIN, TEXAS 78735-8598 USA

TITLE

TOWER MECHANICAL DRAWING

SIZE	FILE NAME	DWG. NO.	REV
B	900-76126.DXF	900-76126	E

SCALE: NA | DO NOT SCALE DRAWING | SHEET 1 OF 1

DWG. NO. 900-76126 REV E