LTM4676
Dual Step-Down µModule Regulator with PMBus Digital Power System Management

DESCRIPTION

Demonstration circuit 1811B-A is a dual-output, high efficiency, high density, µModule® regulator with 4.5V to 26.5V input range. Each output can supply 13A maximum load current. The demo board has a LTM®4676 µModule regulator, which is a dual 13A or single 26A step-down regulator with PMBus power system management. Please see LTM4676 data sheet for more detailed information

The DC1811B-A powers up to default settings and produces power based on configuration resistors without the need for any serial bus communication. This allows easy evaluation of the DC/DC converter. To fully explore the extensive power system management features of the part, download the GUI software LTpowerPlay™ onto your PC and use LTC's I²C/SMBus/PMBus dongle DC1613A to connect to the board. LTpowerPlay allows the user to reconfigure the part on the fly and store the configuration in EEPROM, view telemetry of voltage, current, temperature and fault status

GUI Download

The software can be downloaded from:

http://www.linear.com/ltpowerplay

For more details and instructions of LTpowerPlay, please refer to LTpowerPlay GUI for LTM4676 Quick Start Guide.

Design files for this circuit board are available at http://www.linear.com/demo/DC1811BA

LT, LTC, LTM, Linear Technology and the Linear logo are registered trademarks and LTpowerPlay is a trademark of Linear Technology Corporation. All other trademarks are the property of their respective owners.

BOARD PHOTO

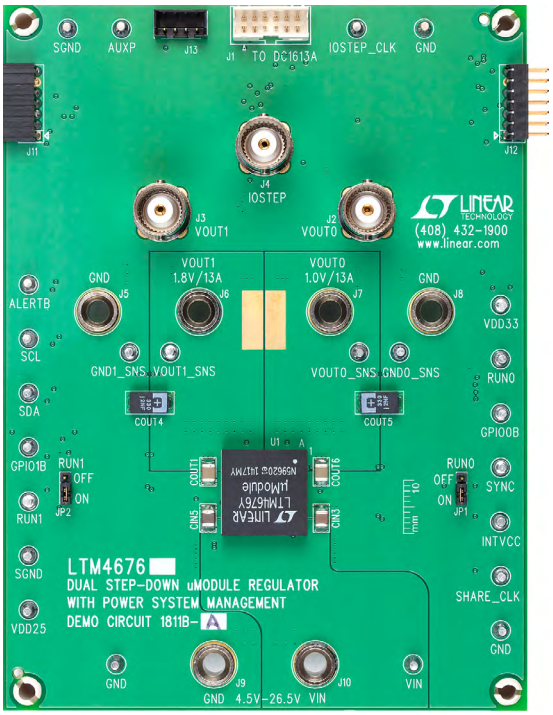

Figure 1. Dual-Output LTM4676/DC1811B-A Demo Circuit

PERFORMANCE SUMMARY (T_A = 25°C)

PARAMETER	CONDITION	VALUE
Input Voltage Range		4.5V to 26.5V
Output Voltage, V_{OUT0}	V_{IN} = 4.5V to 26.5V, I_{OUT0} = 0A to 13A	0.5V to 4V, Default: 1V
Maximum Output Current, I_{OUT0}	V_{IN} = 4.5V to 26.5V, V_{OUT} = 0.5V to 4V	13A
Output Voltage, V_{OUT1}	V_{IN} = 4.5V to 26.5V, I_{OUT1} = 0A to 13A	0.5V to 5.4V, Default: 1.8V
Maximum Output Current, I_{OUT1}	V_{IN} = 4.5V to 26.5V, V_{OUT} = 0.5V to 5.4V	13A
Typical Efficiency	V_{IN} = 12V, V_{OUT} = 1.8V, I_{OUT} = 13A	86.3%
Default Switching Frequency		500kHz

QUICK START PROCEDURE

Table 1. LTM4676 Demo Cards for Up to 130A Point-of-Load Regulation

MAXIMUM OUTPUT CURRENT	NUMBER OF OUTPUT VOLTAGES	NUMBER OF LTM4676 µMODULE REGULATORS ON THE BOARD	DEMO BOARD NUMBER
13A, 13A	2	1x LTM4676	DC1811A/DC1811B-A
13A, 13A	2	1x LTM4676A	DC1811B-B
26A	1	1x LTM4676	DC2087A
50A	1	2x LTM4676	DC1989A-A
75A	1	3x LTM4676	DC1989A-B
100A	1	4x LTM4676	DC1989A-C
100A	1	1x LTM4676 (+ 3x LTM4620A)	DC2106A-A
130A	1	1x LTM4676 (+ 3x LTM4630)	DC2106A-B

Demonstration circuit 1811B-A is easy to set up to evaluate the performance of the LTM4676. Refer to Figure 2 for the proper measurement equipment setup and follow the procedure below.

1. With power off, connect the input power supply to VIN (4.5V to 26.5V) and GND (input return).
2. Connect the 1.0V output load between VOUT0 and GND (Initial load: no load).
3. Connect the 1.8V output load between VOUT1 and GND (Initial load: no load).
4. Connect the DVMs to the input and outputs. Set default jumper position: JP1: ON; JP2: ON.
5. Turn on the input power supply and check for the proper output voltages. V_{OUT0} should be 1.0V ±1 %, and V_{OUT1} should be 1.8 ±1%.
6. Once the proper output voltages are established, adjust the loads within the operating range and observe the output voltage regulation, ripple voltage and other parameters.
7. Connect the dongle and control the output voltages from the GUI. See "LTpowerPlay GUI for the LTM4676 Quick Start Guide" for details.

Note: When measuring the output or input voltage ripple, do not use the long ground lead on the oscilloscope probe. See Figure 3 for the proper scope probe technique. Short, stiff leads need to be soldered to the (+) and (–) terminals of an output capacitor. The probe's ground ring needs to touch the (–) lead and the probe tip needs to touch the (+) lead.

Connecting a PC to DC1811B-A

You can use a PC to reconfigure the power management features of the LTM4676 such as: nominal V_{OUT}, margin set points, OV/UV limits, temperature fault limits, sequencing parameters, the fault log, fault responses, GPIOs and other functionality. The DC1613A dongle may be plugged when V_{IN} is present.

QUICK START PROCEDURE

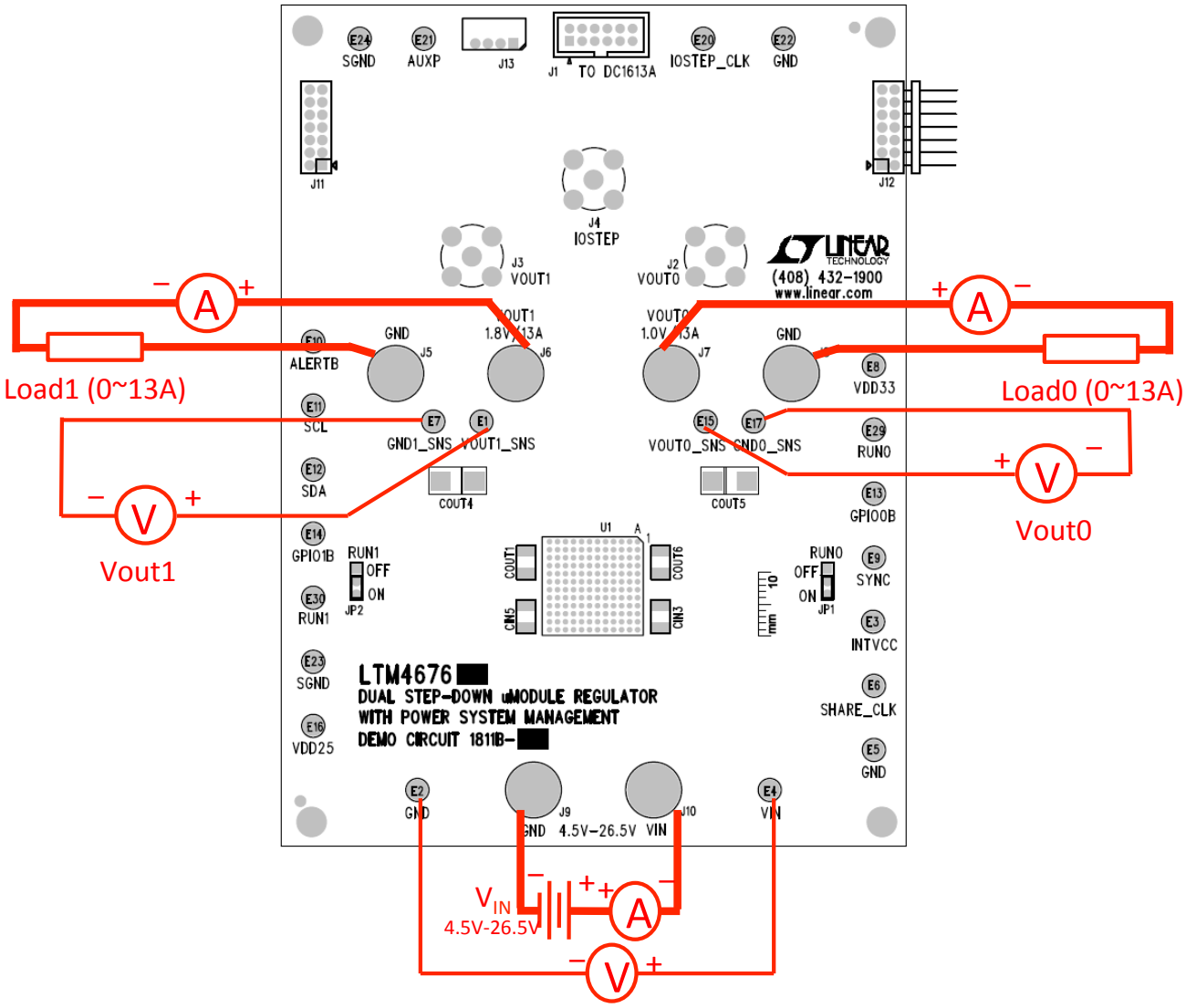

Figure 2. Proper Measurement Equipment Setup

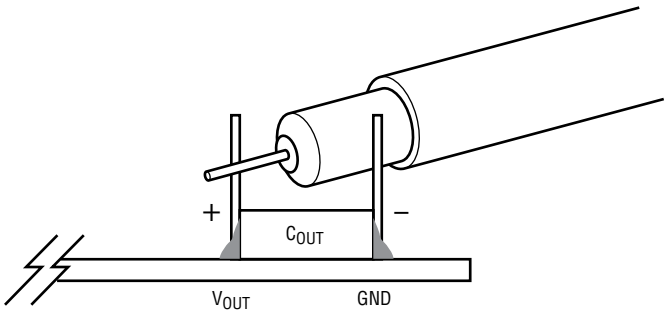

Figure 3. Measuring Output Voltage Ripple

QUICK START PROCEDURE

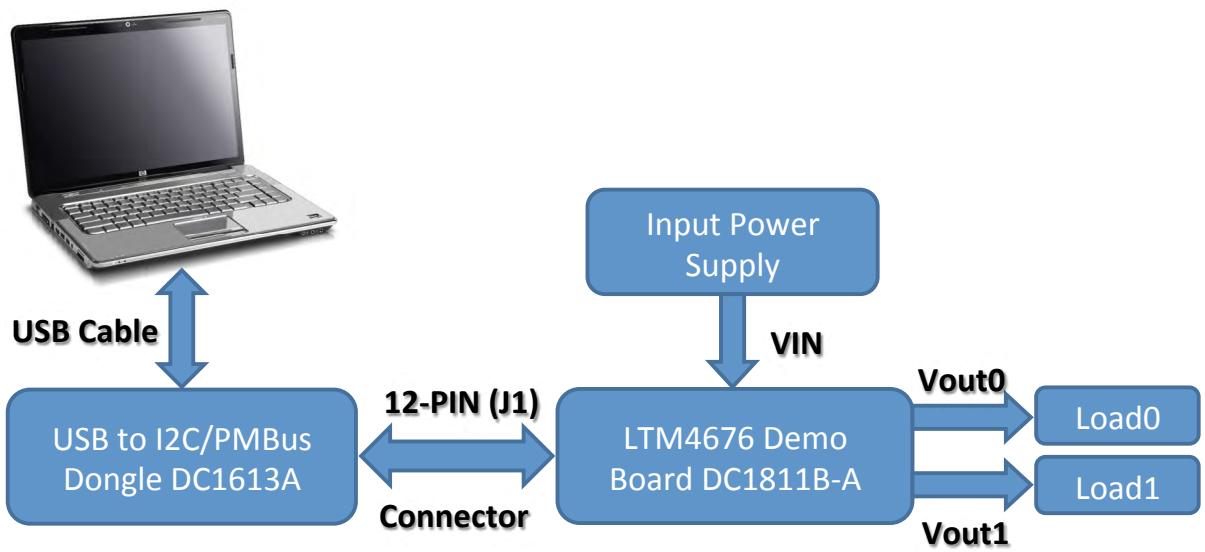

Figure 4. Demo Setup with PC

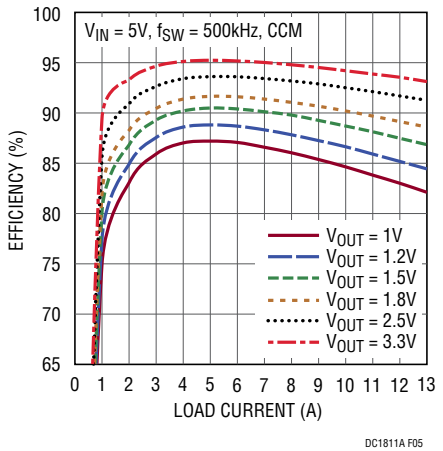

Figure 5. Efficiency vs Load Current at V_{IN} = 5V

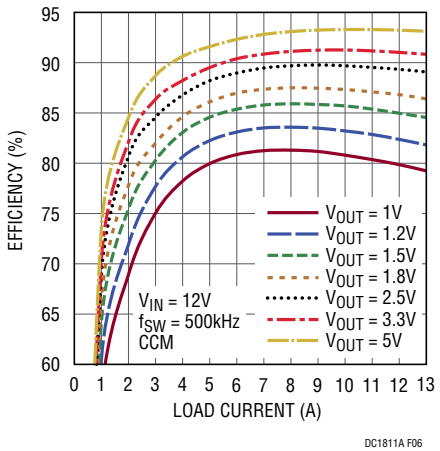

Figure 6. Efficiency vs Load Current at V_{IN} = 12V

QUICK START PROCEDURE

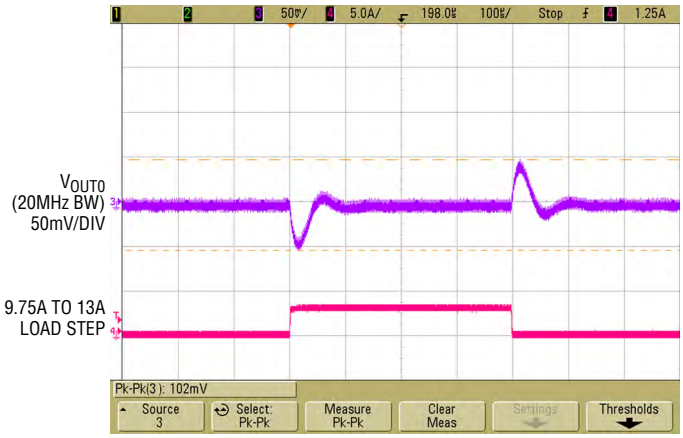

Figure 7. Output Voltage V_{OUT0} vs Load Current (V_{OUT0} RANGE = 0)

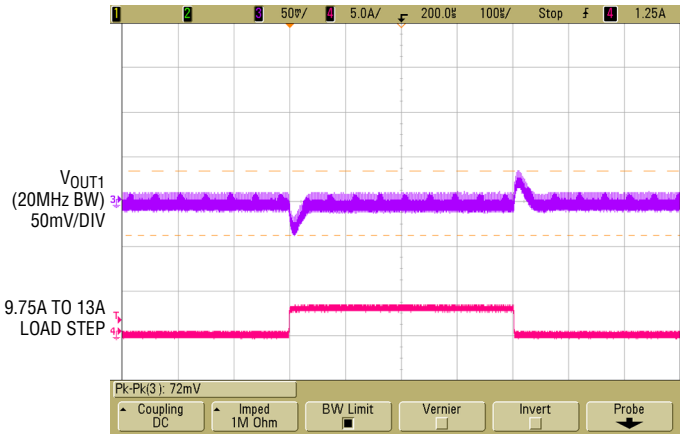

Figure 8. Output Voltage V_{OUT1} vs Load Current (V_{OUT1} Range = 1)

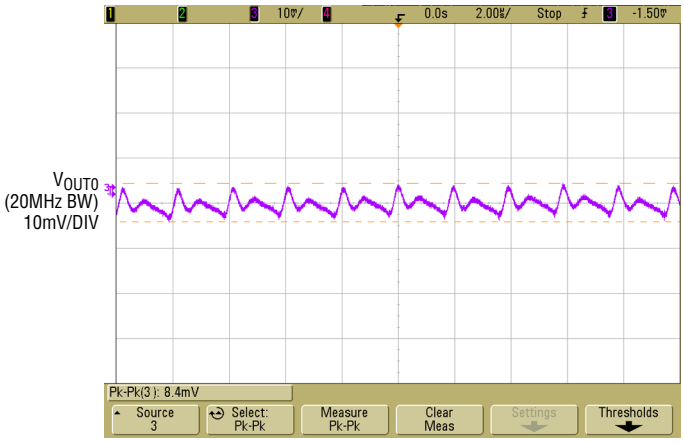

Figure 9. Output Voltage Ripple at V_{IN} = 12V, V_{OUT0} = 1V, I_{OUT0} = 13A

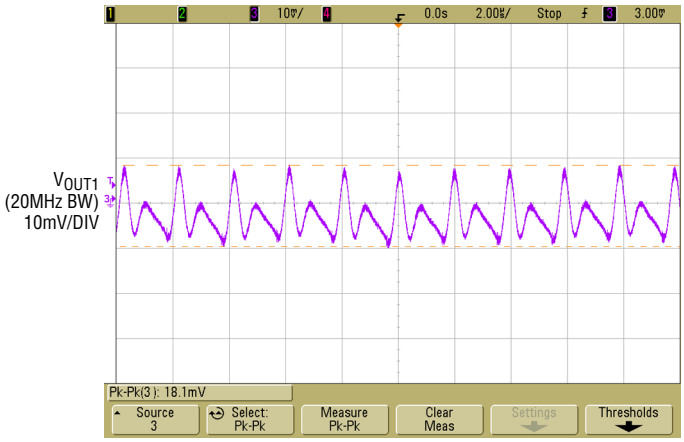

Figure 10. Output Voltage Ripple at V_{IN} = 12V, V_{OUT1} = 1.8V, I_{OUT1} = 13A

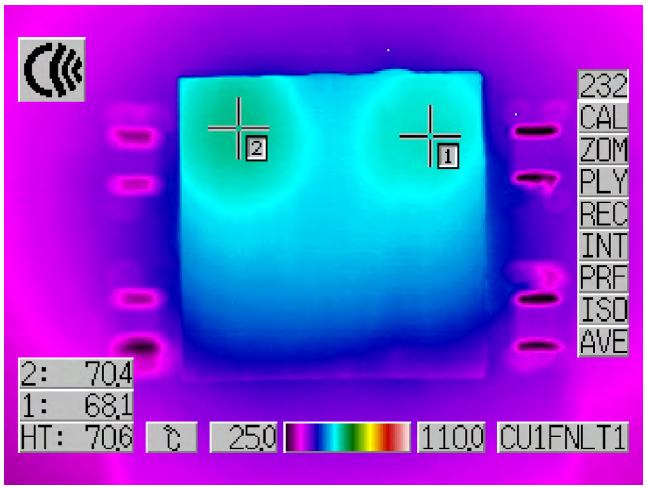

Figure 11. Thermal performance at V_{IN} = 12V, V_{OUT0} = 1.0V, I_{OUT0} = 13A, V_{OUT1} = 1.8V, I_{OUT1} = 13A, T_A = 24°C, 200LFM Airflow

LTpowerPlay SOFTWARE GUI

LTpowerPlay is a powerful Windows-based development environment that supports Linear Technology power system management ICs, including the LTM4676, LTC3880, LTC3883, LTC2974 and LTC2978. The software supports a variety of different tasks. You can use LTpowerPlay to evaluate Linear Technology ICs by connecting to a demo board system. LTpowerPlay can also be used in an offline mode (with no hardware present) in order to build a multichip configuration file that can be saved and reloaded at a later time. LTpowerPlay provides unprecedented diagnostic and debug features. It becomes a valuable diagnostic tool during board bring-up to program or tweak the power management scheme in a system, or to diagnose power issues when bringing up rails. LTpowerPlay utilizes the DC1613A USB-to-SMBus controller to communicate with one of many potential targets, including the LTM4676, the LTC3880 and the LTC3883's demo system, or a customer board. The software also provides an automatic update feature to keep the soft-ware current with the latest set of device drivers and documentation. The LTpowerPlay software can be downloaded from:

http://www.linear.com/ltpowerplay

To access technical support documents for LTC Digital Power Products visit Help. View online help on the LTpowerPlay menu.

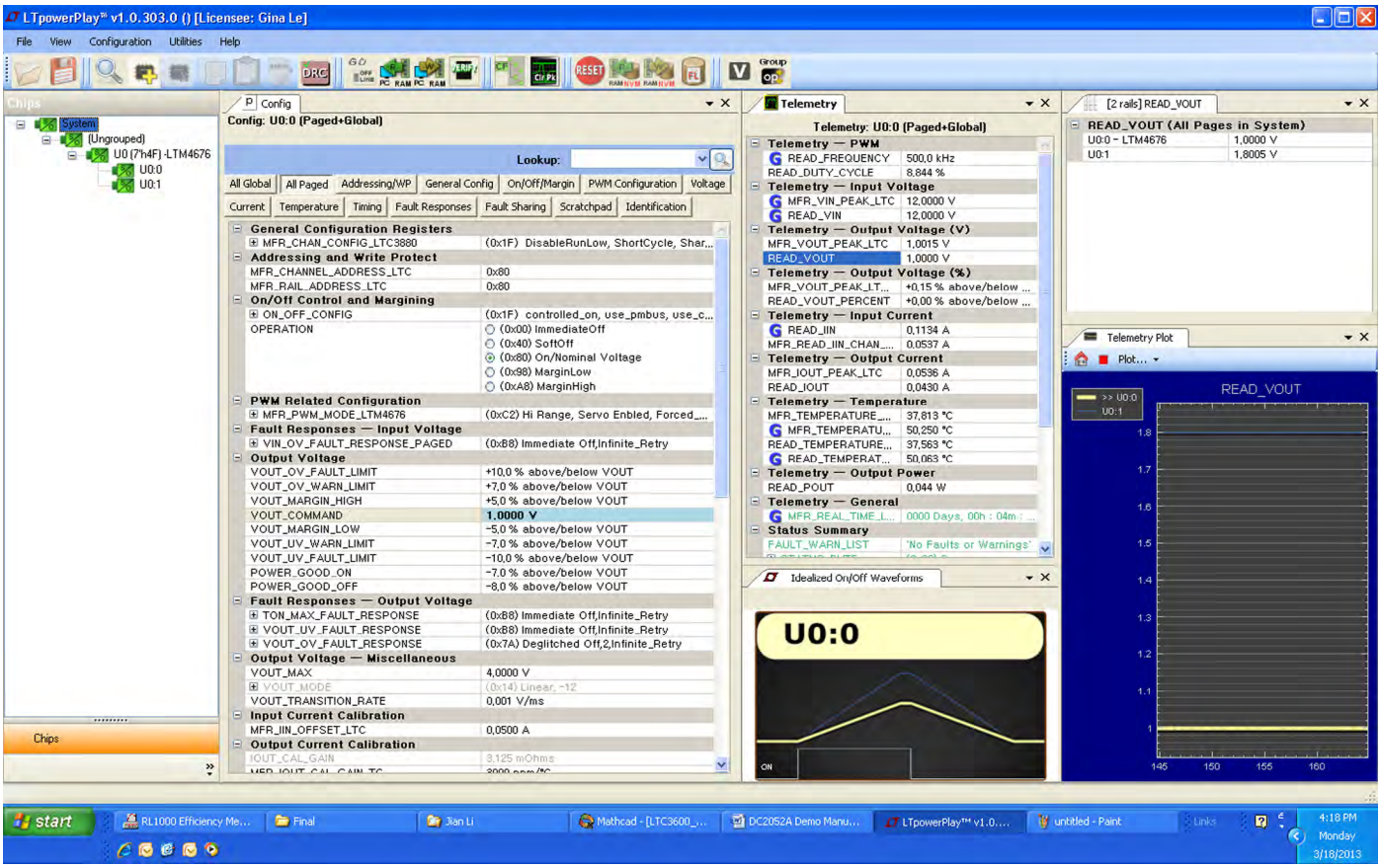

Figure 12. LTpowerPlay Main Interface

LTpowerPlay QUICK START GUIDE

The following procedure describes how to use LTpowerPlay to monitor and change the settings of LTM4676.

1. Download and install the LTPowerPlay GUI:

   http://www.linear.com/ltpowerplay

2. Launch the LTpowerPlay GUI.

   a. The GUI should automatically identify the DC1811B-A. The system tree on the left hand side should look like this:

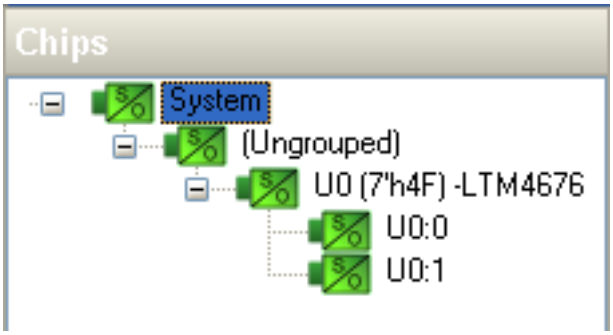

   b. A green message box shows for a few seconds in the lower left hand corner, confirming that LTM4676 is communicating:

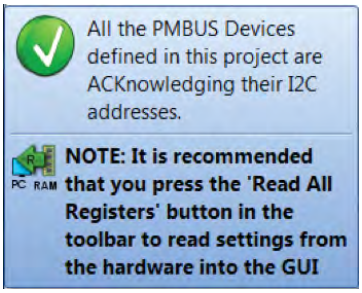

   c. In the Toolbar, click the "R" (RAM to PC) icon to read the RAM from the LTM4676. This reads the configuration from the RAM of LTM4676 and loads it into the GUI.

   d. If you want to change the output voltage to a different value, like 1.5V. In the Config tab, type in 1.5 in the VOUT_COMMAND box, like this:

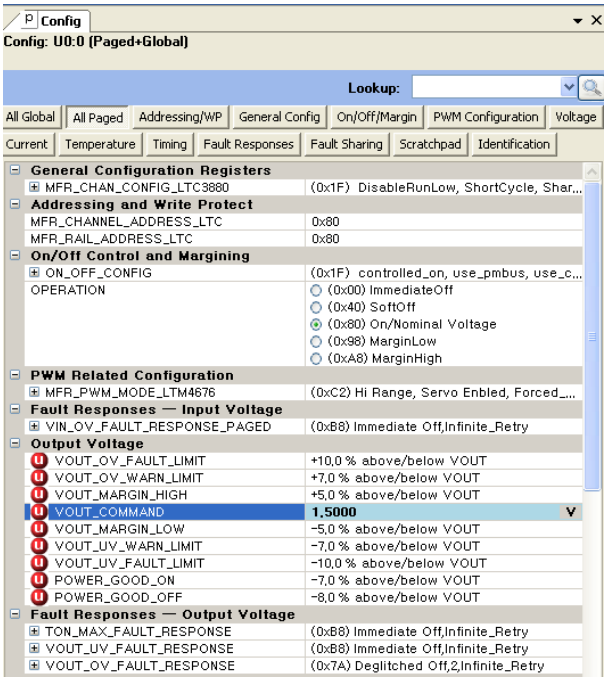

   Then, click the "W" (PC to RAM) icon to write these register values to the LTM4676. After finishing this step, you will see the output voltage will change to 1.5V.

   If the write is successful, you will see the following message:

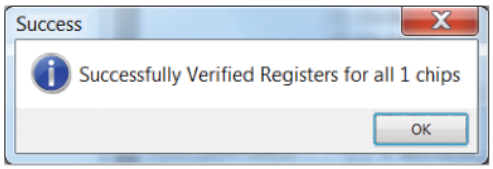

   e. You can save the changes into the NVM. In the tool bar, click "RAM to NVM" button, as following

   f. Save the demo board configuration to a (*.proj) file. Click the Save icon and save the file. Name it whatever you want.

PARTS LIST

ITEM	QTY	REFERENCE	PART DESCRIPTION	MANUFACTURER/PART NUMBER
Required Circuit Components				
1	1	CIN1	CAP., 150µF, 35V, ALUMINUM ELECTR.,	SUN ELECT., 35CE150AX
2	4	CIN2, CIN3, CIN4, CIN5	CAP., X5R, 10µF, 35V, 10%,1210	MURATA, GRM32ER6YA106KA12
3	6	COUT1-COUT3, COUT6-COUT8	CAP., X5R, 100µF, 6.3V, 20%, 1210	AVX, 12106D107MAT2A
4	2	COUT4, COUT5	CAP., 330µF, 6.3V, POSCAP, D3L	PANASONIC, 6TPF330M9L
5	2	C1, C14	CAP., X7R, 2200pF, 25V, 10%, 0603	AVX, 06033C222KAT2A
6	1	C26	CAP., X5R, 100nF, 16V, 10%,0603	AVX, 0603YD104KAT2A
7	2	C27, C28	CAP., X5R, 10nF, 16V, 10%,0603	AVX, 0603YD103KAT2A
8	1	C23	CAP., X7R, 1µF, 25V,10%, 0805	AVX, 08053C105KAT2A
9	3	C21, C22, C24	CAP., X5R, 1µF, 25V,10%, 0603	AVX, 06033D105KAT2A
10	2	JP1, JP2	HEADER 3 PIN 0.079 SINGLE ROW	SULLIN, NRPN031PAEN-RC
11	3	J2-J4	CONN, BNC, 5PINS	CONNEX, 112404
12	1	J1	CONN HEADER 12POS 2Mm STR DL PCB	FCI, 98414-G06-12ULF
13	6	J5-J10	BANANA JACK	KEYSTONE, 575-4
14	1	Q1	N-Channel 30-V Mosfet	VISHAY, SUD50N04-8M8P-4GE3
15	1	D8	DIODE, ULTRA LOW SCHOTTKY RECTIFIER	NXP SEMI., PMEG2005AEL
16	1	Q19	P-Channel 30-V Mosfet	DIODES INC., DMP3130L-7
17	1	J11	CONN RECEPT 2mm DUAL R/A 14POS (F)	SULLINS, NPPN072FJFN-RC
18	1	J12	HEADER 14POS 2mm R/A GOLD (M)	MOLEX, 87760-1416
19	1	J13	HEADER, 4 PINS, SHROUDED	HIROSE, DF3A-4P-2DSA
20	10	R3, R5, R7, R9, R25, R31, R32, R63, R65, R66	RES., CHIP, 0Ω, 1%, 0603	NIC, NRC06Z0TRF
21	2	R69, R70	RES., CHIP, 10, 1%, 0603	NIC, NRC06F10R0TRF
22	12	R10-R16, R18, R19, R24, R52, R77	RES., CHIP, 10K, 1%, 0603	NIC, NRC06F1002TRF
23	1	R78	RES., CHIP, 15.8K, 1%, 0603	NIC, NRC06F1582TRF
24	1	R30	RES., CHIP, 6.34K, 1%, 0603	VISHAY, CRCW06036K34FKEA
25	3	R2, R72, R73	RES., CHIP, 4.99K, 1%, 0603	NIC, NRC06F4991TRF
26	1	R22	RES., CHIP, 4.22K, 1%, 0603	VISHAY, CRCW06034K22FKEA
27	1	R48	RES., CHIP, 0Ω, 0.5W, 2010	NIC, NRC50Z0TRF
28	1	R53	RES., CHIP, 0.01Ω, 1/2W, 1%, 2010	VISHAY, WSL2010R0100FEA
29	1	U3	IC, 24LC025-I/ST, SOIC	MICROCHIP, 24LC025-I/ST
30	1	U1	IC, LTM4676EY#PBF	LINEAR TECH., LTM4676EY#PBF
Additional Demo Board Circuit Components				
1	0	C2, C15-C17(OPT)	CAP., 0603	
2	0	D1, D2 (OPT)	DIODE, SOD-323	
3	0	R4, R6, R8, R20, R23, R26-R29, R33, R35, R37, R38, R41, R49, R61, R62, R64, R67, R68, R74, R75, R82, R83, R88, R89 (OPT)	RES., OPTIONAL	
4	0	R50, R51(OPT)	RES., CHIP, 30, 1%, 2512	
Hardware-For Demo Board Only				
1	24	E1-E17, E20-E24, E28, E29	TESTPOINT, TURRET, 0.062"	MILL-MAX, 2308-2-00-80-00-00-07-0
2	2	XJP1, XJP2	SHUNT	SAMTEC, 2SN-BK-G
3	4	(STAND-OFF)	STAND-OFF, NYLON 0.50" tall (SNAP ON)	KEYSTONE, 8833
4	1		FAB, PRINTED CIRCUIT BOARD	DEMO CIRCUIT 1811B-A

SCHEMATIC DIAGRAM

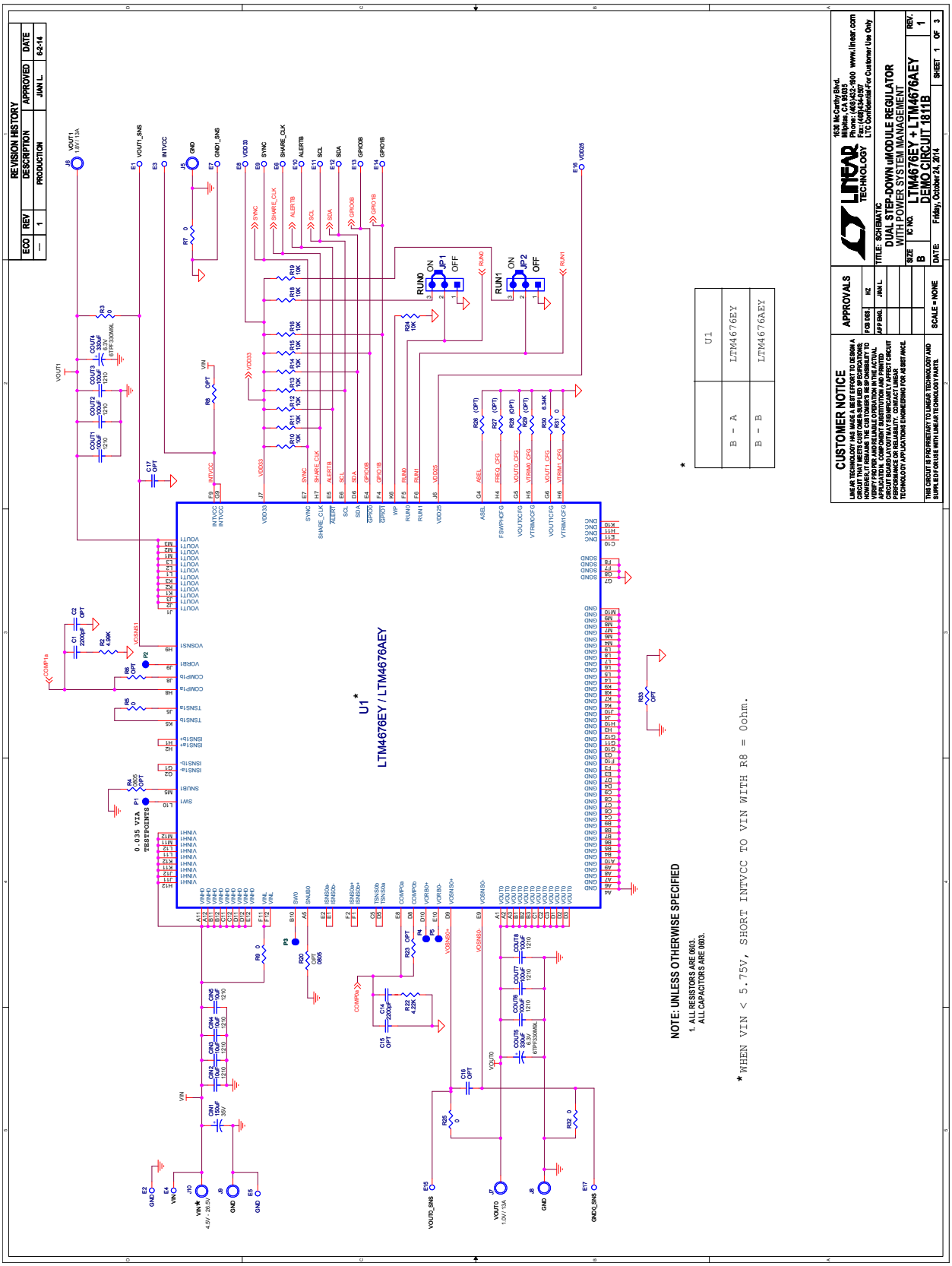

SCHEMATIC DIAGRAM

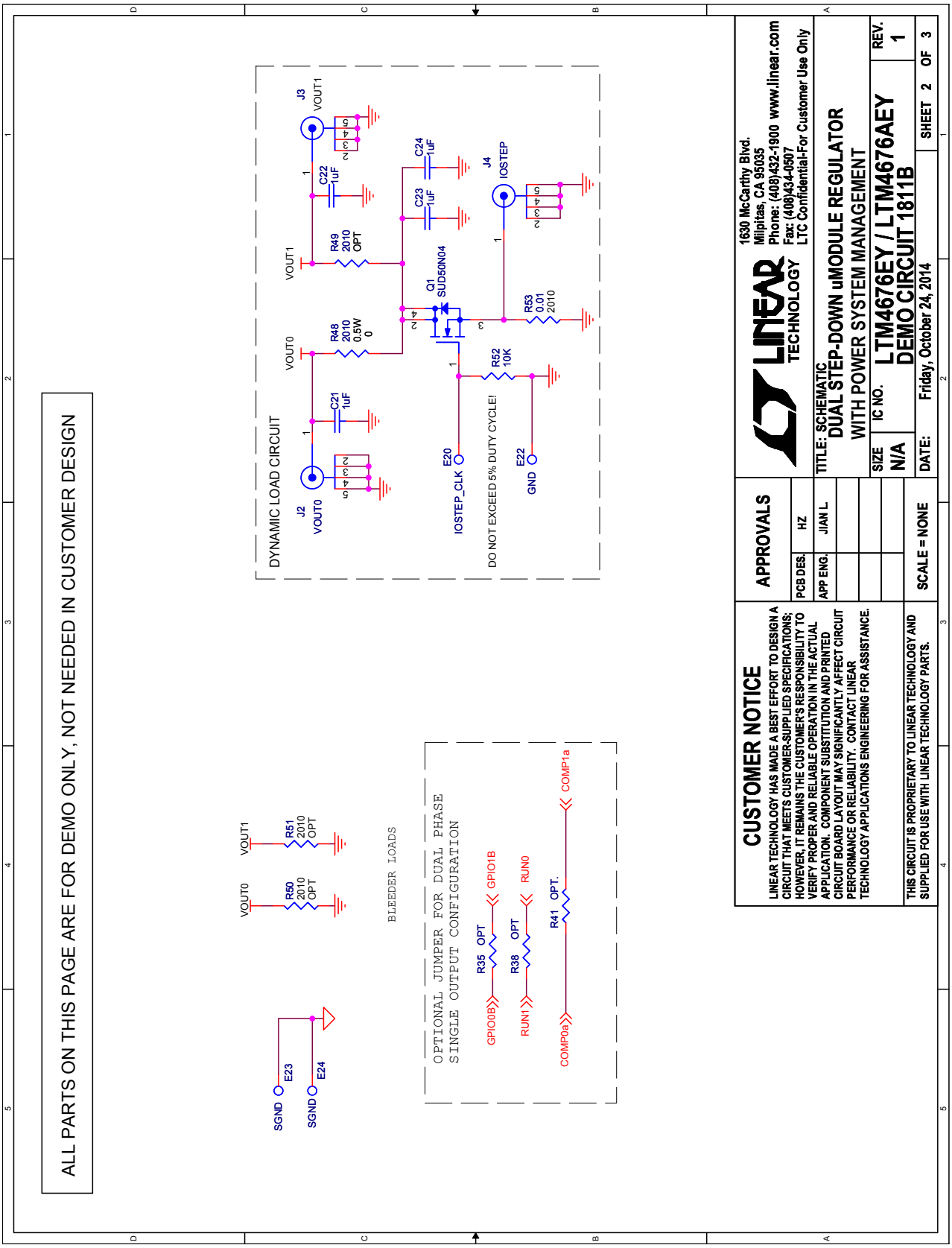

dc1811baf

Information furnished by Linear Technology Corporation is believed to be accurate and reliable. However, no responsibility is assumed for its use. Linear Technology Corporation makes no representation that the interconnection of its circuits as described herein will not infringe on existing patent rights.

SCHEMATIC DIAGRAM

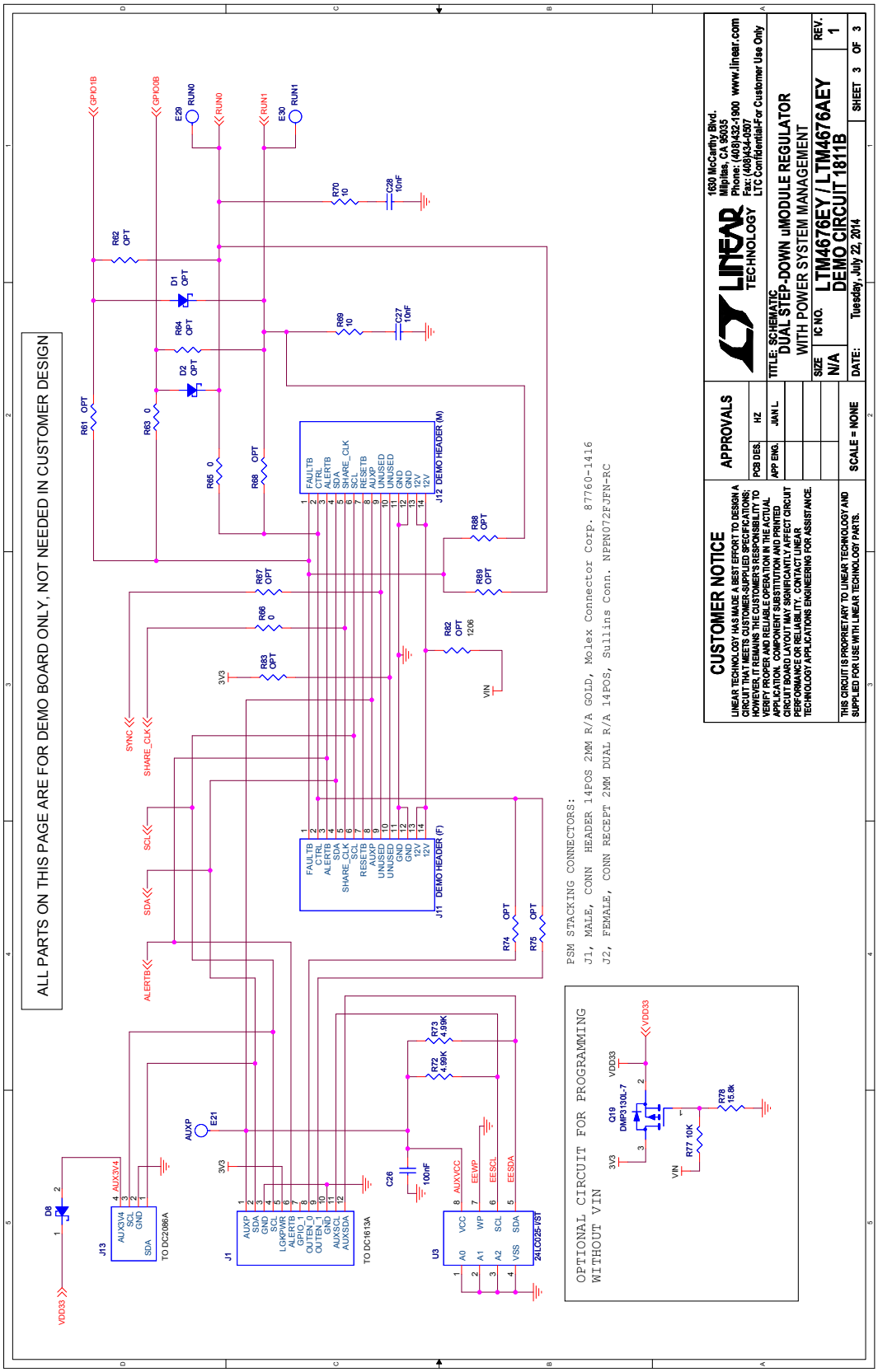

DEMONSTRATION BOARD IMPORTANT NOTICE

Linear Technology Corporation (LTC) provides the enclosed product(s) under the following **AS IS** conditions:

This demonstration board (DEMO BOARD) kit being sold or provided by Linear Technology is intended for use for **ENGINEERING DEVELOPMENT OR EVALUATION PURPOSES ONLY** and is not provided by LTC for commercial use. As such, the DEMO BOARD herein may not be complete in terms of required design-, marketing-, and/or manufacturing-related protective considerations, including but not limited to product safety measures typically found in finished commercial goods. As a prototype, this product does not fall within the scope of the European Union directive on electromagnetic compatibility and therefore may or may not meet the technical requirements of the directive, or other regulations.

If this evaluation kit does not meet the specifications recited in the DEMO BOARD manual the kit may be returned within 30 days from the date of delivery for a full refund. THE FOREGOING WARRANTY IS THE EXCLUSIVE WARRANTY MADE BY THE SELLER TO BUYER AND IS IN LIEU OF ALL OTHER WARRANTIES, EXPRESSED, IMPLIED, OR STATUTORY, INCLUDING ANY WARRANTY OF MERCHANTABILITY OR FITNESS FOR ANY PARTICULAR PURPOSE. EXCEPT TO THE EXTENT OF THIS INDEMNITY, NEITHER PARTY SHALL BE LIABLE TO THE OTHER FOR ANY INDIRECT, SPECIAL, INCIDENTAL, OR CONSEQUENTIAL DAMAGES.

The user assumes all responsibility and liability for proper and safe handling of the goods. Further, the user releases LTC from all claims arising from the handling or use of the goods. Due to the open construction of the product, it is the user's responsibility to take any and all appropriate precautions with regard to electrostatic discharge. Also be aware that the products herein may not be regulatory compliant or agency certified (FCC, UL, CE, etc.).

No License is granted under any patent right or other intellectual property whatsoever. **LTC assumes no liability for applications assistance, customer product design, software performance, or infringement of patents or any other intellectual property rights of any kind.**

LTC currently services a variety of customers for products around the world, and therefore this transaction **is not exclusive**.

Please read the DEMO BOARD manual prior to handling the product. Persons handling this product must have electronics training and observe good laboratory practice standards. **Common sense is encouraged**.

This notice contains important safety information about temperatures and voltages. For further safety concerns, please contact a LTC application engineer.

Mailing Address:

Linear Technology

1630 McCarthy Blvd.

Milpitas, CA 95035

Copyright © 2004, Linear Technology Corporation

© LINEAR TECHNOLOGY CORPORATION 2014