DS21354DK
E1 Single-Chip Transceiver Design Kit Daughter Card

www.maxim-ic.com

GENERAL DESCRIPTION

The DS21354 design kit is an easy-to-use evaluation board for the DS21354 E1 single-chip transceiver (SCT). The DS21354DK is intended to be used as a daughter card with either the DK2000 or the DK101 motherboards. The DS21354DK comes complete with a DS21354 SCT, transformers, termination resistors, configuration switches, line-protection circuitry, network connectors, and motherboard connectors. The DK101/DK2000 motherboard and Dallas' ChipView software give point-and-click access to configuration and status registers from a Windows®-based PC. On-board LEDs indicate receive loss-of-signal and interrupt status, as well as multiple clock and signal routing configurations.

Each DS21354DK is shipped with a free DK101 motherboard. For complex applications, the DK2000 high-performance demo kit motherboard can be purchased separately.

Windows is a registered trademark of Microsoft Corp.

DESIGN KIT CONTENTS

DS21354DK Design Kit Daughter Card
DK101 Low-Cost Motherboard
CD ROM
- ChipView Software
- DS21354DK Data Sheet
- DK101 Data Sheet
- DS21354 Data Sheet
- DS21354 Errata Sheet

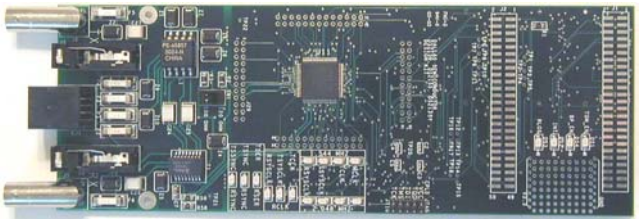

FEATURES

- **Demonstrates Key Functions of the DS21354 E1 SCT Transceiver**
- **Includes DS21354 SCT, Transformers, Bantum, BNC and RJ48 Network Connectors, and Termination Passives**
- **BNC Connections for 75Ω E1**
- **Bantam and RJ48 Connectors for 120Ω E1**
- **Multitap Transformer to Facilitate True Impedance Matching for 75Ω and 120Ω/100Ω Paths**
- **Compatible with DK101 and DK2000 Demo Kit Motherboards**
- **DK101/DK2000 and ChipView Software Provide Point-and-Click Access to the DS21354 Register Set**
- **Software-Controlled (Register Mapped) Configuration Switches to Facilitate Clock and Signal Routing**
- **All Equipment-Side Framer Pins are Easily Accessible for External Data Source/Sink**
- **LEDs for Loss-Of-Signal and Interrupt Status as well as Indications for Multiple Clock and Signal Routing Configurations**
- **Easy-to-Read Silk Screen Labels Identify the Signals Associated with all Connectors, Jumper, and LEDs**
- **Network Interface Protection for Overvoltage and Overcurrent Events Area Available for Further Customization**

ORDERING INFORMATION

PART	DESCRIPTION
DS21354DK	DS21354 Design Kit Daughter Card (with include DK101 motherboard)

TABLE OF CONTENTS

COMPONENT LIST **3**

BASIC OPERATION **4**

HARDWARE CONFIGURATION 4
QUICK SETUP (DEMO MODE) 4
QUICK SETUP (REGISTER VIEW) 4

REGISTER MAP **5**

CPLD REGISTER MAP 5

DS21354 INFORMATION **8**

DS21354DK INFORMATION **8**

TECHNICAL SUPPORT **8**

SCHEMATICS **8**

DOCUMENT REVISION HISTORY **8**

LIST OF TABLES

Table 1. Daughter Card Address Map 5
Table 2. CPLD Register Map 5

COMPONENT LIST

DESIGNATION	QTY	DESCRIPTION	SUPPLIER	PART
C1–C5, C8–C12, C15–C19, C21, C22, C29–C34	23	0.1µF 10%, 16V ceramic capacitors (0603)	Digi-Key	311-1088-1-ND
C7, C36	2	1µF 10%, 16V ceramic capacitors (1206)	Digi-Key	PCC1882CT-ND
C13, C14	2	0.1µF 10%, 16V ceramic capacitors (0805)	Digi-Key	311-1142-1-ND
C23	1	0.1µF 10%, 25V ceramic capacitor (1206)	Digi-Key	PCC1883CT-ND
C24–C27	4	0.22µF, 50V ceramic capacitors	Digi-Key	UNK
C35	1	10µF 20%, 16V tantalum capacitor (B case)	Digi-Key	PCS3106CT-ND
DS1, DS4–DS18	16	LED, green, SMD	Digi-Key	P501CT-ND
DS2, DS3	2	LED, red, SMD	Digi-Key	P500CT-ND
F1–F6	6	250V, 1.25A fuse, SMT	Teccor Electronics	F1250T
J1, J2	2	Male 0.1, SMD, 50-pin, dual-row vertical	Samtec	TSM-125-01-T-DV
J3, J4	2	Bantam connectors	SWK	RTT34B02
J5, J6	2	Connector BNC RA 5-pin	Kruvand	UCBJR220
J7–J9	3	Socket, SMD, 50-pin, dual-row vertical	Samtec	TFM-125-02-S-D-LC
JT10	1	Connector, 10-pin, dual-row vertical	Digi-Key	S2012-05-ND
L1	1	Choke, dual 4-line 24µH, 8-pin SO	Pulse Engineering	PE-65857
R1, R14, R21	3	51.1Ω 1%, 1/8W resistors (1206)	Digi-Key	P51.1FCT-ND
R2, R3, R58, R59	4	0Ω 5%, 1/8W resistors (1206)	Digi-Key	P0.0ETR-ND
R4, R5, R60	3	51.1Ω 1%, 1/10W resistors (0805)	Digi-Key	P51.1CCT-ND
R6, R9, R10, R13, R15–R19, R22, R23, R25–R29, R32, R37, R38, R44, R47–R49, R61	24	10kΩ 1%, 1/10W resistors (0805)	Digi-Key	P10.0KCCT-ND
R7, R8, R11, R12, R30, R31, R35, R36, R39–R43, R45, R50–R53	18	330Ω 0.1%, 1/10W MF resistors (0805)	Digi-Key	P330ZCT-ND
R24	1	1.0kΩ 1%, 1/10W resistor (0805)	Digi-Key	P1.00KCCT-ND
R33, R34	2	Not populate	—	Not populated
R46	1	4.7kΩ 1%, 1/8W resistor (0805)	Digi-Key	9C08052A4701FK HFT
R54, R55	2	61.9Ω 1%, 1/8W resistors (1206)	Digi-Key	P61.9FCT-ND
R56, R57	2	49.9Ω 1%, 1/8W resistors (1206)	Digi-Key	P49.9FCT-ND
RJ1	1	RJ48 connector	Molex	43223
SW1	1	Switch DPDT slide 6-pin TH	Avnet	SSA22
T1	1	XFMR 16-pin SMT	Pulse Engineering	TX1099
U1–U4, U6	5	BBUS switch 10-bit CMOS, 150-mil, 24-pin SO	IDT	IDTQS3R861Q
U5	1	144-pin macrocell CPLD	Avnet	XC95144XL-10TQ100C
U7–U10	4	Quad bus switch, 150-mil, 16-pin SO	IDT	IDTQS3125Q
U11	1	T1/E1/J1 XCVR 100-pin QFP, 0°C to +70°C	Dallas Semiconductor	DS2156L
Z1, Z6–Z8	4	160V, 500A Sidactor	Teccor Electronics	P1800SCMC
Z2, Z3	2	58V, 500A Sidactor	Teccor Electronics	P0640SCMC
Z4, Z5	2	6V, 50A Sidactor	Teccor Electronics	P0080SAMC
Z9, Z10	2	25V, 500A Sidactor	Teccor Electronics	P0300SCMC

BASIC OPERATION

This design kit relies upon several supporting files, which can be downloaded from our website at www.maxim-ic.com/DS21354DK. See the DS21354DK QuickView data sheet for these files.

Hardware Configuration

Using the DK101 processor board:

- Connect the daughter card to the DK101 processor board.
- Supply 3.3V to the banana-plug receptacles marked GND and VCC_3.3V. (The external 5V connector and the TIM 5V supply headers are unused.)
- All processor board DIP switch settings should be in the ON position with exception for the flash programming switch, which should be OFF.
- From the Programs menu, launch the host application named ChipView.EXE. Run the ChipView application. If the default installation options were used, click the Start button on the Windows toolbar and select Programs→ChipView→ChipView.

Using the DK2000 processor board:

- Connect the daughter card to the DK2000 processor board.
- Connect J1 to the power supply that is delivered with the kit. Alternately, a PC power supply can be connected to connector J2.
- From the Programs menu, launch the host application named ChipView.EXE. Run the ChipView application. If the default installation options were used, click the Start button on the Windows toolbar and select Programs→ChipView→ChipView.

General:

- Upon power-up the RLOS LED is lit, as well as the MCLK-2.048MHz and TCLK-2.048MHz LEDs.
- Due to the dual winding transformer, only the 120Ω line build-out configuration setting is needed to cover 75Ω E1 and 120Ω E1.

Quick Setup (Demo Mode)

- The PC loads the program, offering a choice among Demo Mode, Register View, and Terminal Mode. Select Demo Mode.
- The program requests a configuration file, then select DS21354_E1_DSNCOM_DRVR.cfg.
- The Demo Mode screen appears. Upon external loopback, the LOS and OOF indicators extinguish.

Quick Setup (Register View)

- The PC loads the program, offering a choice among Demo Mode, Register View, and Terminal Mode. Select Register View.
- The program requests a definition file, then select DS21354.def.
- The Register View screen appears, showing the register names, acronyms, and values. Note: During the definition file load process, all registers are initialized according to the init value filed in the definition file (because the SETUP field in the .def file is turned on).
- Predefined register settings for several functions are available as initialization files.
  - INI files are loaded by selecting the menu File→Reg Ini File→Load Ini File.
  - Load the INI file DS21354e1_fas_crc4_cas.ini.
  - After loading the INI file the following may be observed:
    The RLOS LED extinguishes upon external loopback.
    The device is now configured for E1 FAS with CRC4 and CAS.

Miscellaneous:

- Clock frequencies and certain pin bias levels are provided by a register-mapped CPLD, which is on the DS21354 daughter card.
- The definition file for this CPLD is named DS215x_35x_CPLD_V2.def. See the *CPLD Register Map* section for definitions.
- All files referenced above are available for download in the section marked “File Locations.”

REGISTER MAP

The DK101 daughter card address space begins at 0x81000000.
The DK2000 daughter card address space begins at:

0x30000000 for slot 0
0x40000000 for slot 1
0x50000000 for slot 2
0x60000000 for slot 3

All offsets given in Table 1 are relative to the beginning of the daughter card address space.

Table 1. Daughter Card Address Map

OFFSET	DEVICE	DESCRIPTION
0X0000 to 0X0015	CPLD	Board identification and clock/signal routing
0X1000 to 0X10ff	Single-Chip Transceiver	Board is populated with one of the following: DS2155, DS2156, DS21352, or DS21354. Please see the data sheet(s) for details.

Registers in the CPLD can be easily modified using ChipView.exe, a host-based user-interface software, along with the definition file named *DS215x_35x_CPLD_V2.def*. Definition files for the SCT are named *DS2155.def*, *DS21352.def*, or *DS21354.def*, depending on the board population option.

CPLD Register Map

Table 2. CPLD Register Map

OFFSET	NAME	TYPE	DESCRIPTION
0X0000	BID	Read-Only	Board ID
0X0002	XBIDH	Read-Only	High-Nibble Extended Board ID
0X0003	XBIDM	Read-Only	Middle-Nibble Extended Board ID
0X0004	XBIDL	Read-Only	Low-Nibble Extended Board ID
0X0005	BREV	Read-Only	Board FAB Revision
0X0006	AREV	Read-Only	Board Assembly Revision
0X0007	PREV	Read-Only	PLD Revision
0X0011	SWITCH1	Read-Write	Pin to 1.544MHz
0X0012	SWITCH2	Read-Write	Pin to 2.048MHz
0X0013	SWITCH3	Read-Write	Pin-to-Pin Connect
0X0014	SWITCH4	Read-Write	Pin-to-Pin Connect
0X0015	LEVELS	Read-Write	Set Level on Pin 1 = 3.3V

ID Registers

OFFSET	NAME	TYPE	VALUE	DESCRIPTION
0X0000	BID	Read-Only	0xD	Board ID
0X0002	XBIDH	Read-Only	0x0	High-Nibble Extended Board ID
0X0003	XBIDM	Read-Only	0x0	Middle-Nibble Extended Board ID
0X0004	XBIDL	Read-Only	0x5	Low-Nibble Extended Board ID
0X0005	BREV	Read-Only	Displays current FAB revision	Board FAB Revision
0X0006	AREV	Read-Only	Displays current assembly revision	Board Assembly Revision
0X0007	PREV	Read-Only	Displays current PLD firmware	PLD Revision

			revision	

Control Registers

The control registers are used primarily to control several banks of FET switches that route clocks and backplane signals. Please note that certain register settings cause line contention, e.g., setting SWITCH1.4 and SWITCH2.4 both to 0 would drive MCLK with both 1.544MHz and 2.048MHz.

SWITCH1: PIN TO 1.544MHz (OFFSET = 0x0011) INITIAL VALUE = 0xF

(MSB) **(LSB)**

—	—	—	—	MCLK	TCLK	RSYSCLK	TSYSCLK

NAME	POSITION	FUNCTION
MCLK	SWITCH1.3	0 = Connect MCLK to the 1.544MHz clock 1 = Open Switch 1.4
TCLK	SWITCH1.2	0 = Connect TCLK to the 1.544MHz clock 1 = Open Switch 1.3
RSYSCLK	SWITCH1.1	0 = Connect RSYSCLK to the 1.544MHz clock 1 = Open Switch 1.2
TSYSCLK	SWITCH1.0	0 = Connect TSYSCLK to the 1.544MHz clock 1 = Open Switch 1.1

SWITCH2: PIN TO 2.048MHz (Offset = 0X0012) INITIAL VALUE = 0x3

(MSB) **(LSB)**

—	—	—	—	MCLK	TCLK	RSYSCLK	TSYSCLK

NAME	POSITION	FUNCTION
MCLK	SWITCH2.3	0 = Connect MCLK to the 2.048MHz clock 1 = Open Switch 2.4
TCLK	SWITCH2.2	0 = Connect TCLK to the 2.048MHz clock 1 = Open Switch 2.3
RSYSCLK	SWITCH2.1	0 = Connect RSYSCLK to the 2.048MHz clock 1 = Open Switch 2.2
TSYSCLK	SWITCH2.0	0 = Connect TSYSCLK to the 2.048MHz clock 1 = Open Switch 2.1

SWITCH3: PIN-TO-PIN CONNECT (Offset = 0X0013) INITIAL VALUE = 0xF

(MSB) **(LSB)**

—	—	—	—	TSS_RS	TCL_RC	RSY_RC	TSY_RC

NAME	POSITION	FUNCTION
TSS_RS	SWITCH3.3	0 = Connect TSSYNC to RSYNC 1 = Open Switch 3.4
TCL_RC	SWITCH3.2	0 = Connect TCLK to RCLK 1 = Open Switch 3.3
RSY_RC	SWITCH3.1	0 = Connect RSYSCLK to RCLK 1 = Open Switch 3.2
TSY_RC	SWITCH3.0	0 = Connect TSYSCLK to RCLK 1 = Open Switch 3.1

SWITCH4: PIN-TO-PIN CONNECT (Offset = 0X0014) INITIAL VALUE = 0x3

(MSB)							(LSB)
—	—	—	—	URCLK_2048	UTCLK_2048	RSER_TSER	RSYNC_TSYNC

NAME	POSITION	FUNCTION
URCLK_2048	SWITCH4.3	0 = Connect UR_CLK (TSSYNC) to 2.048MHz 1 = Open Switch 4.4
UTCLK_2048	SWITCH4.2	0 = Connect UT_CLK (TCHCLK) to 2.048MHz 1 = Open Switch 4.3
RSER_TSER	SWITCH4.1	0 = Connect RER to TSER 1 = Open Switch 4.2
RSYNC_TSYNC	SWITCH4.0	0 = Connect RSYNC to TSYNC 1 = Open Switch 4.1

LEVELS: SET LEVEL ON PIN (Offset = 0X0015) INITIAL VALUE = 0x6

(MSB)							(LSB)
—	—	—	—	—	BP_EN	PPCTDM_EN	TUSEL

NAME	POSITION	FUNCTION
—	LEVELS1.3	—
BP_EN	LEVELS1.2	0 = Enable IDT switches that connect the UTOPIA bus to daughter card header
PPCTDM_EN	LEVELS1.1	0 = Enable IDT switches that connect the TDM bus to the daughter card header
TUSEL	LEVELS1.0	0 = Set DS2156.TUSEL to enable TDM backplane 1 = Set DS2156.TUSEL to enable UTOPIA backplane

Note (DS2156 only): When the UTOPIA backplane is enabled (LEVELS.TUSEL = 1) there is a possibility for contention between the UTOPIA bus master and TSYSCLK, TSER, and RSER. To avoid this, the following switches should be opened when the UTOPIA backplane is enabled: SWITCH1.0, SWITCH2.0, SWITCH3.0, and SWITCH4.1

DS21354 INFORMATION

For more information about the DS21354, please consult the DS21354 data sheet available on our website at www.maxim-ic.com/DS21354. Software downloads are also available for this design kit.

DS21354DK INFORMATION

For more information about the DS21354DK, including software downloads, please consult the DS21354DK data sheet available on our website at www.maxim-ic.com/DS21354DK.

TECHNICAL SUPPORT

For additional technical support, please e-mail your questions to telecom.support@dalsemi.com.

SCHEMATICS

The DS21354DK schematics are featured in the following 13 pages.

DOCUMENT REVISION HISTORY

REVISION DATE	DESCRIPTION
060303	Initial DS21354DK data sheet release.
011904	Updated the *General Description* and *Features* sections; added the *Demo Kit Contents* section.
012705	Updated schematics (removed component values for Fuse and Sidactor; see *Component List*).
110106	Updated schematics.

Maxim/Dallas Semiconductor cannot assume responsibility for use of any circuitry other than circuitry entirely embodied in a Maxim/Dallas Semiconductor product. No circuit patent licenses are implied. Maxim/Dallas Semiconductor reserves the right to change the circuitry and specifications without notice at any time.

Maxim Integrated Products, 120 San Gabriel Drive, Sunnyvale, CA 94086 408-737-7600

© 2006 Maxim Integrated Products

The Maxim logo is a registered trademark of Maxim Integrated Products, Inc. The Dallas logo is a registered trademark of Dallas Semiconductor.

DS2156, DS2155, DS2135Y DESIGN KIT

CONTENTS

1. COVER PAGE
2. SCT POPULATION OPTION (DS2155, DS2156, DS21352 OR DS21354)
3. TX AND RX ANALOG PATHS
4. TIM ADDRESS AND DATA BUS
5. CPLD ADDRESS DATA CONNECTIONS, BIAS LEVELS FOR SCT
6. UTOPIA: TIM HEADER AND BUS SWITCHES
7. TESTPOINTS FOR UTOPIA 2
8. UTOPIA: NETLIST ASSOCIATIONS
9. SWITCHING FOR CLOCKS AND TDM
10. SUPPLY DECOUPLING
11. SCT TESTPOINTS
12. NETLIST CROSS-REFERENCE
13. PART CROSS-REFERENCE

TITLE: DS2156DK02A0	DATE: 10/04/02
ENGINEER: STEVE SCULLY	PAGE: 1 /13

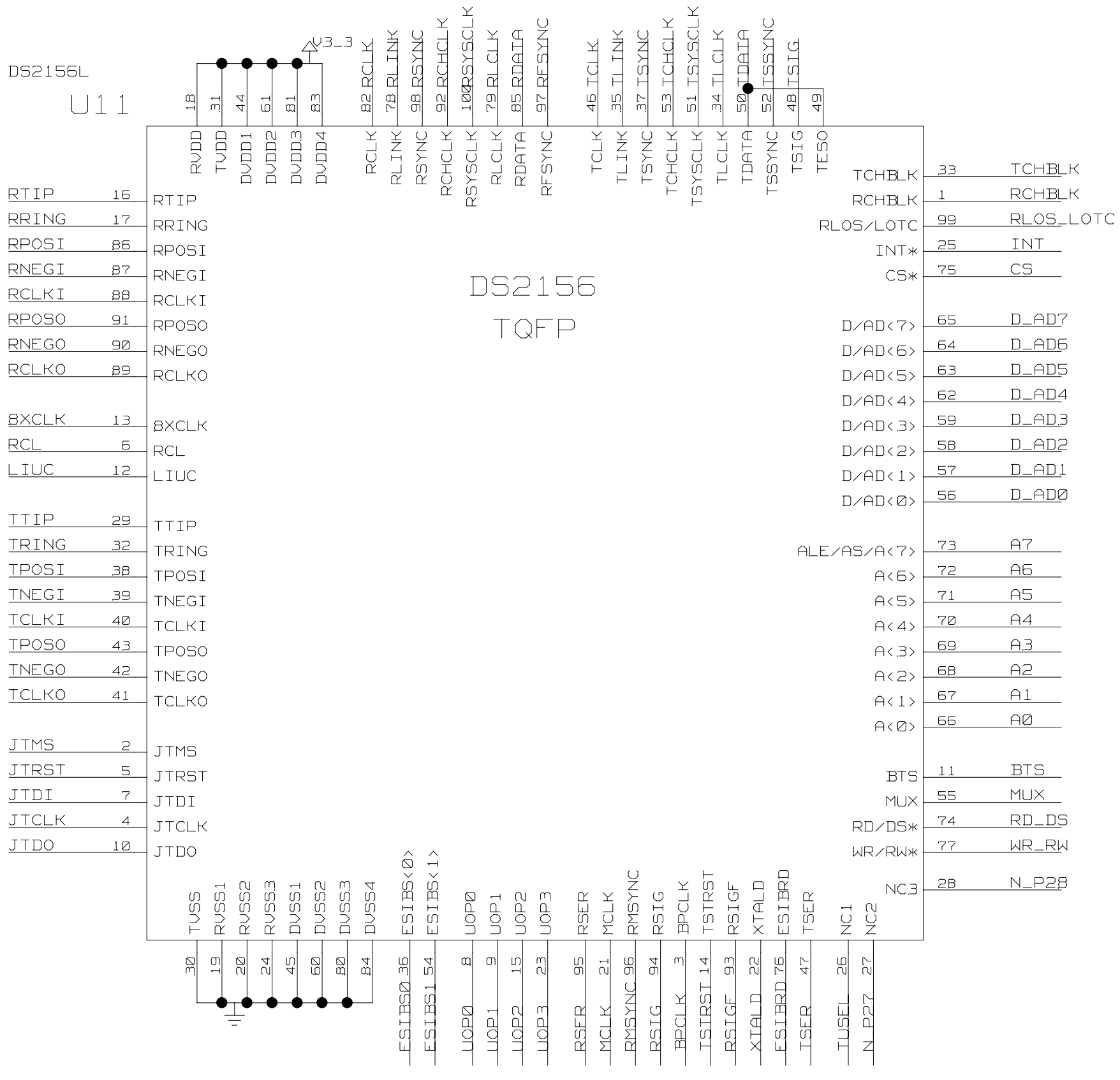

TITLE: DS2156DK02A0	DATE: 10/04/02
ENGINEER: STEVE SCULLY	PAGE: 2 /13

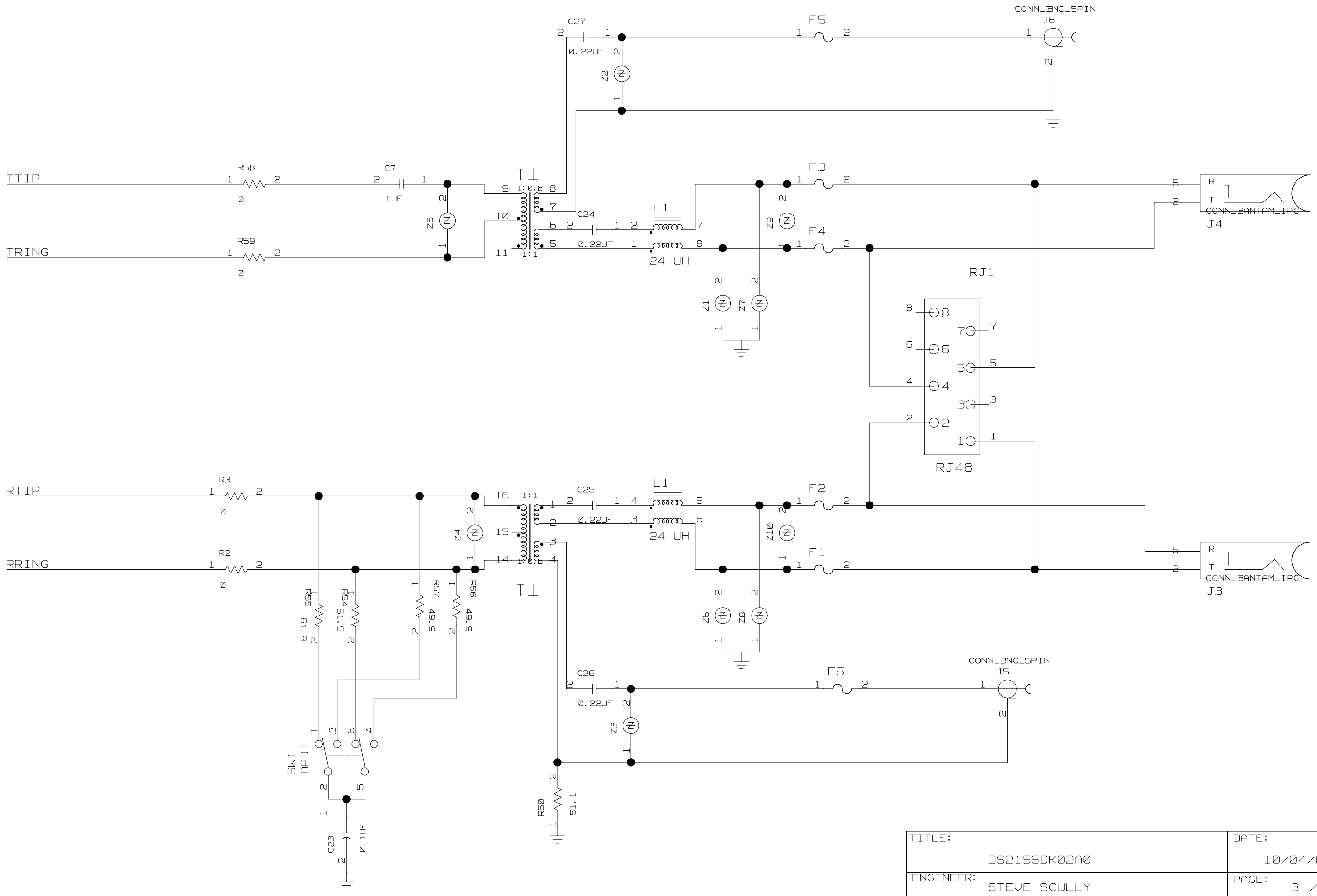

TITLE: DS2156DK02A0	DATE: 10/04/02
ENGINEER: STEVE SCULLY	PAGE: 3 /13

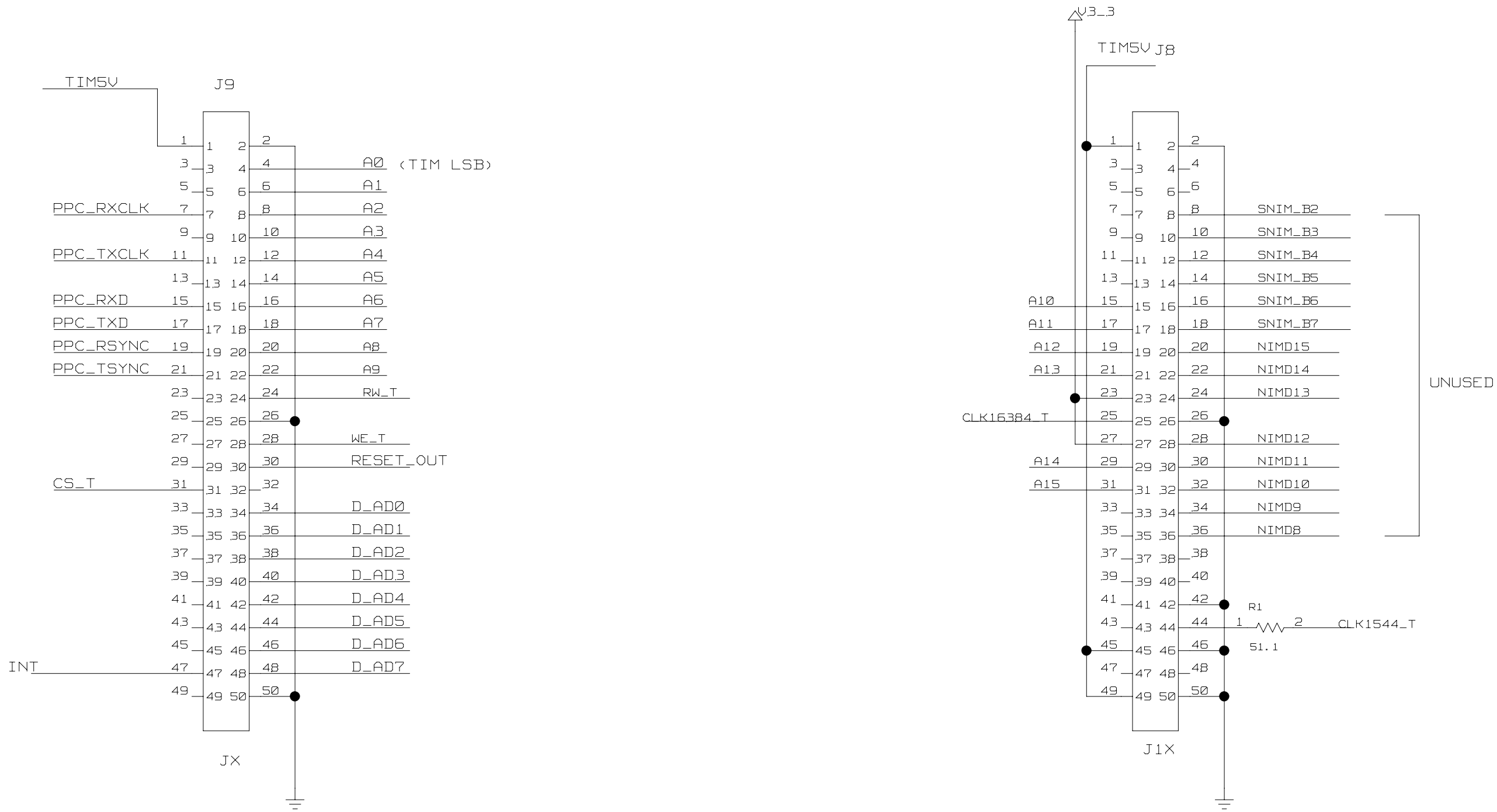

TITLE: DS2156DK02A0	DATE: 10/04/02
ENGINEER: STEVE SCULLY	PAGE: 4 /13

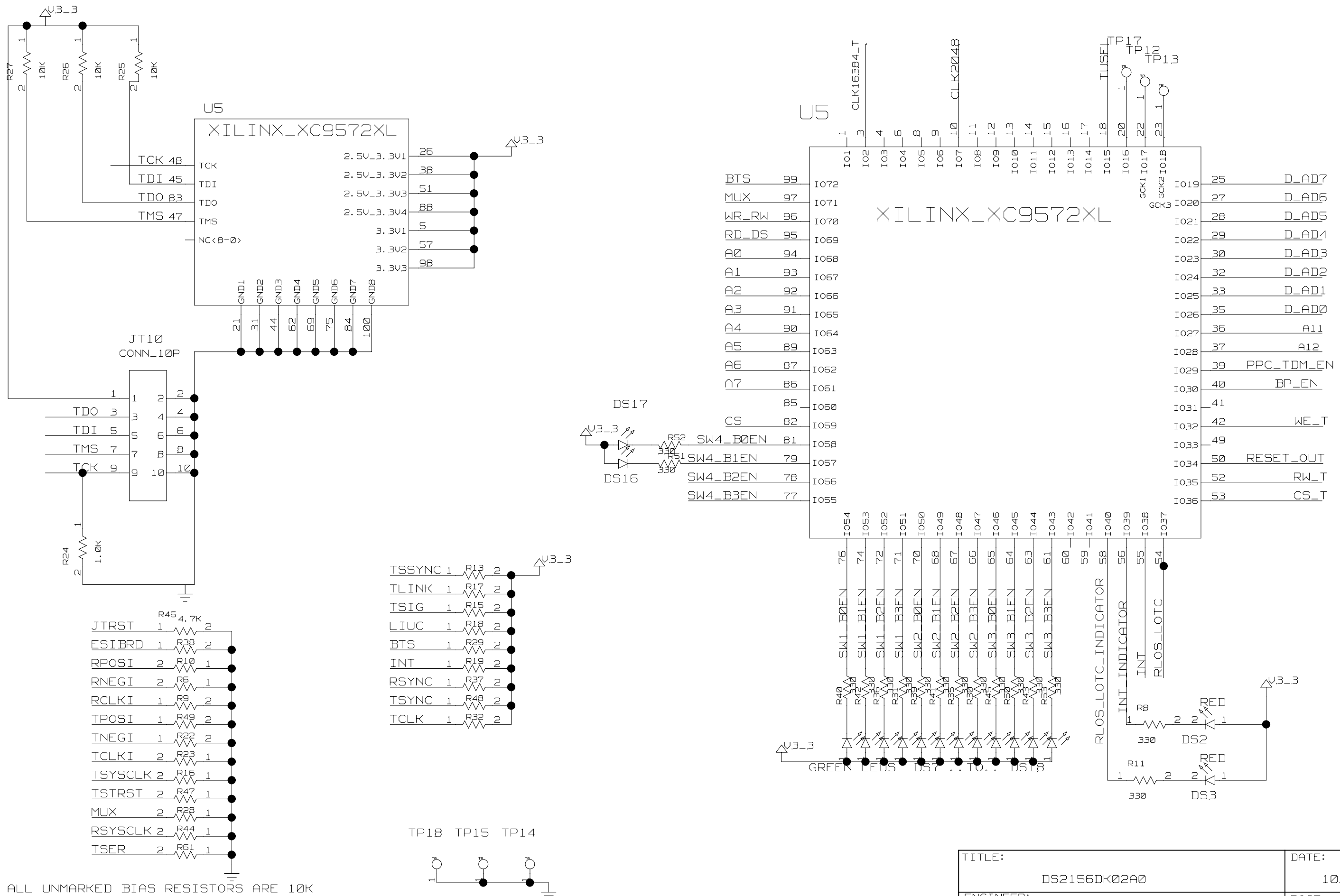

ALL UNMARKED BIAS RESISTORS ARE 10K

TITLE: DS2156DK02A0	DATE: 10/04/02
ENGINEER: STEVE SCULLY	PAGE: 5 /13

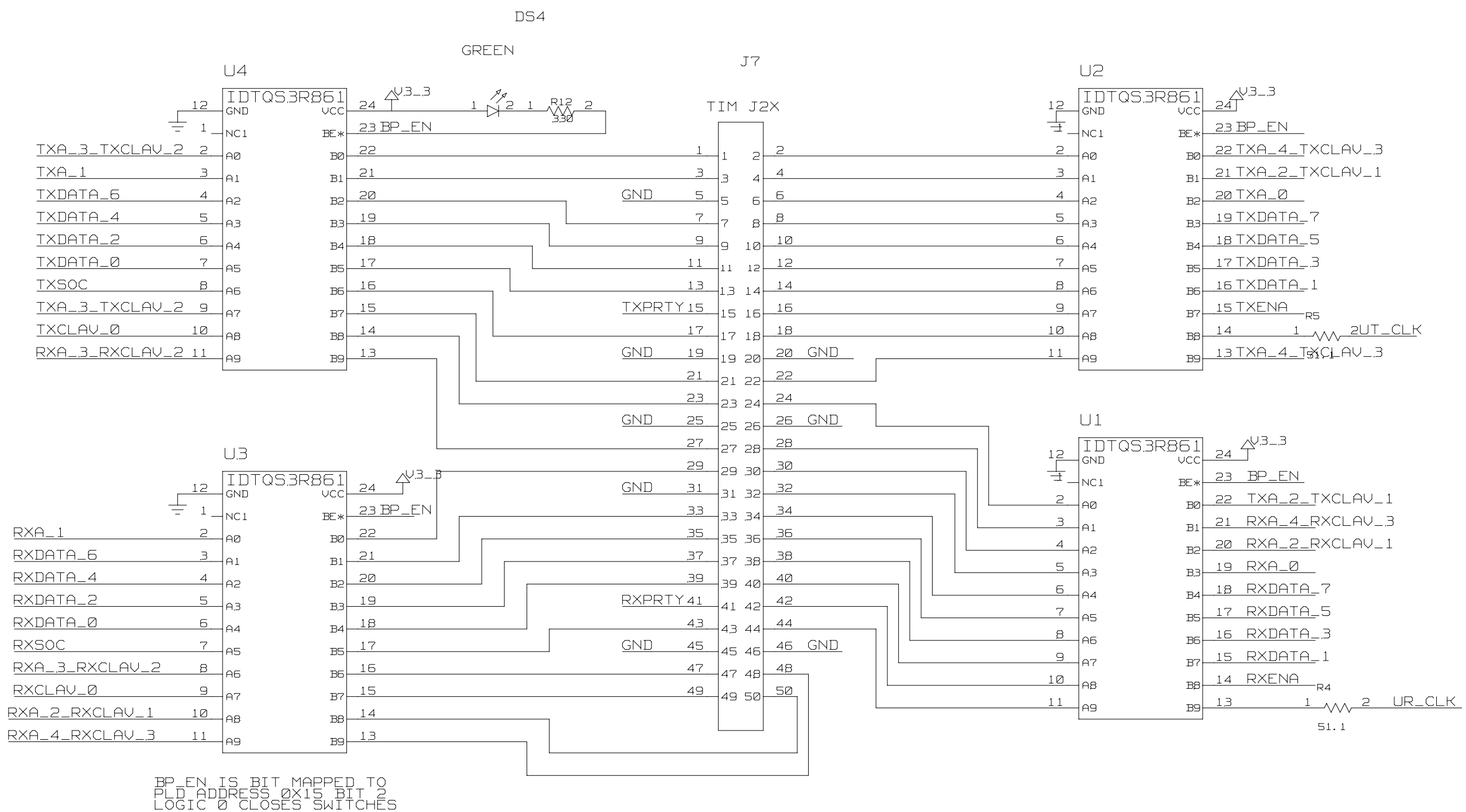

TITLE: DS2156DK02A0	DATE: 10/04/02
ENGINEER: STEVE SCULLY	PAGE: 6 /13

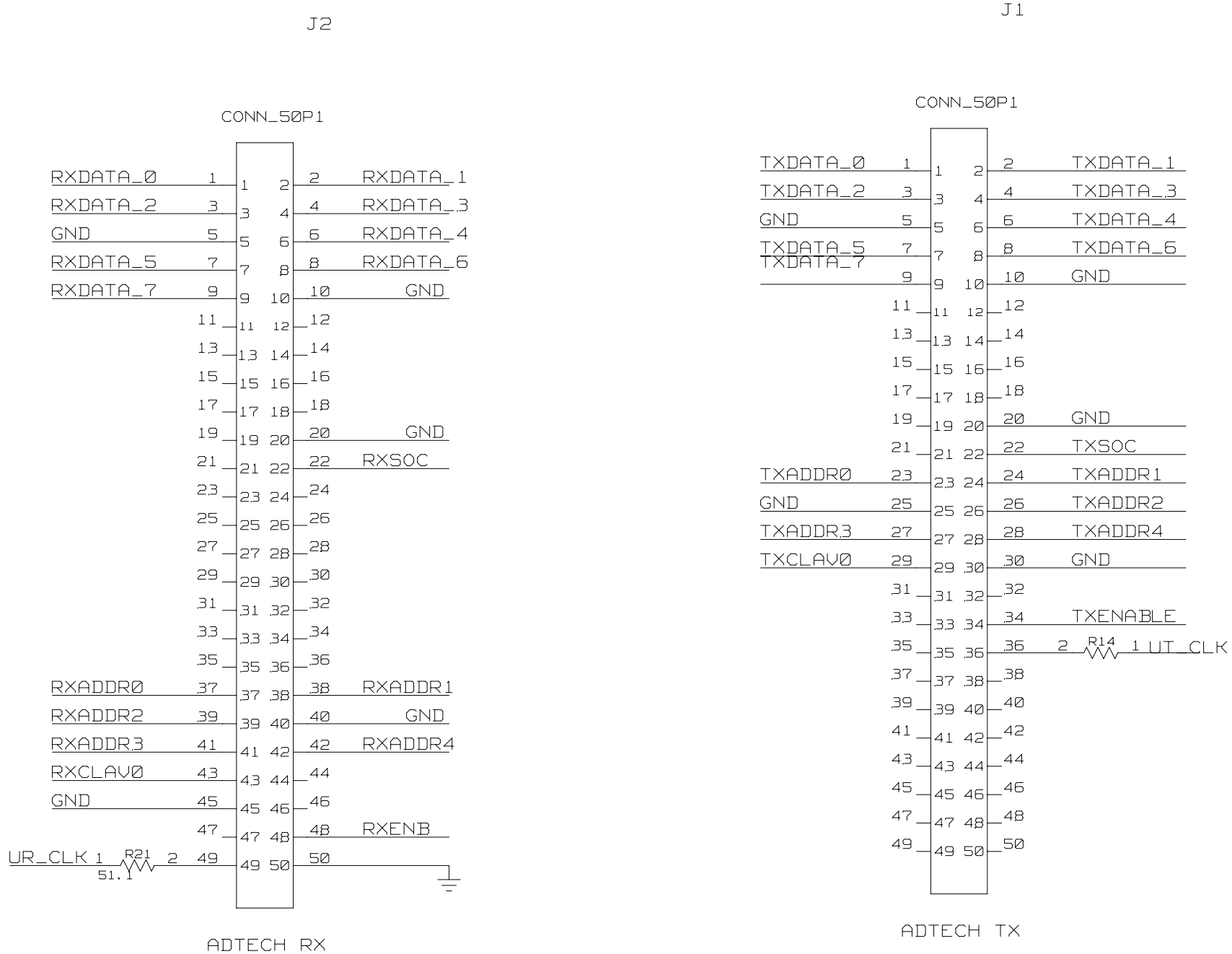

TITLE: DS2156DK02A0	DATE: 10/04/02
ENGINEER: STEVE SCULLY	PAGE: 7 /13

RXADDR0	RXA_0
UR_ADDR0	RCHCLK
RXADDR1	RXA_1
UR_ADDR1	RSIGF
RXADDR2	RXA_2_RXCLAV_1
UR_ADDR2	RSIG
RXADDR3	RXA_3_RXCLAV_2
UR_ADDR3	RMSYNC
RXADDR4	RXA_4_RXCLAV_3
UR_ADDR4	RFSYNC
RXCLAV0	RXCLAV_0
UR_CLAV	RSER
RXDATA_0	RXDATA_0
UR_DATA0	RLINK
RXDATA_1	RXDATA_1
UR_DATA1	RLCLK
RXDATA_2	RXDATA_2
UR_DATA2	RPOSI
RXDATA_3	RXDATA_3
UR_DATA3	RNEGI
RXDATA_4	RXDATA_4
UR_DATA4	RCLKI
RXDATA_5	RXDATA_5
UR_DATA5	RCLKO
RXDATA_6	RXDATA_6
UR_DATA6	RNEGO
RXDATA_7	RXDATA_7
UR_DATA7	RPOSO

RXENB	RXENA
UR_ENB	BPCLK
RXSOC	RXSOC
UR_SOC	RCHBLK
TXADDR0	TXA_0
UT_ADDR0	UOP3
TXADDR1	TXA_1
UT_ADDR1	TCHBLK
TXADDR2	TXA_2_TXCLAV_1
UT_ADDR2	TLCLK
TXADDR3	TXA_3_TXCLAV_2
UT_ADDR3	TLINK
TXADDR4	TXA_4_TXCLAV_3
UT_ADDR4	TPOSI
TXCLAV0	UT_CLAV
TXCLAV_0	LIUC
TXDATA_0	TXDATA_0
UT_DATA0	TNEGI
TXDATA_1	TXDATA_1
UT_DATA1	TCLKI
TXDATA_2	TXDATA_2
UT_DATA2	TCLKO
TXDATA_3	TXDATA_3
UT_DATA3	TNEGO
TXDATA_4	TXDATA_4
UT_DATA4	TPOSO
TXDATA_5	TXDATA_5
UT_DATA5	TSER

TXDATA_6	TXDATA_6
UT_DATA6	TSIG
TXDATA_7	TXDATA_7
UT_DATA7	TSYSCLK
TXENABLE	TXENA
UT_ENB	UOP1
TXSOC	TXSOC
UT_SOC	UOP0

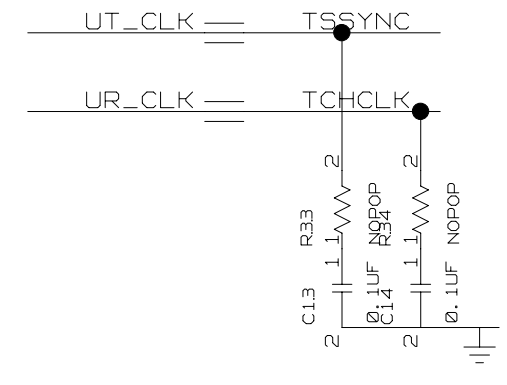

TITLE: DS2156DK02A0	DATE: 10/04/02
ENGINEER: STEVE SCULLY	PAGE: 8 /13

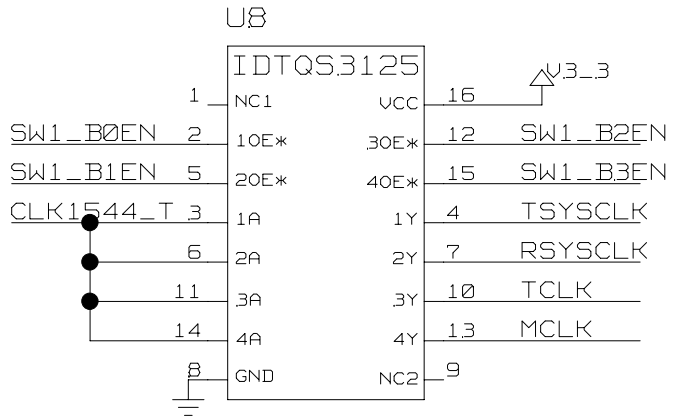

SWITCH 1 IS MEMORY MAPPED
TO PLD REGISTER 0X11
LOGIC 0 CLOSES SWITCH
LOGIC 1 OPENS SWITCH

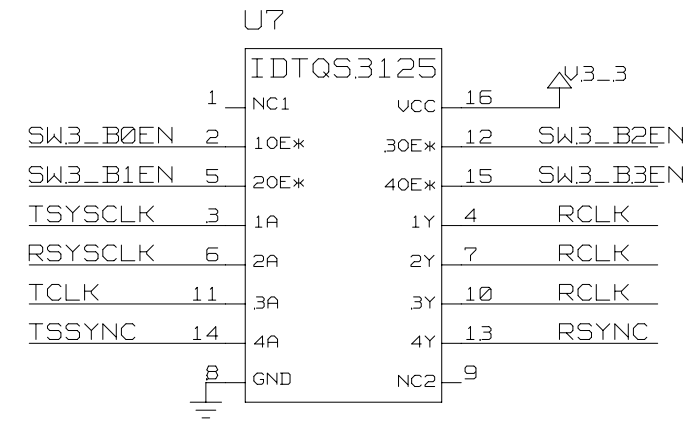

SWITCH 3 IS MEMORY MAPPED
TO PLD REGISTER 0X13
LOGIC 0 CLOSES SWITCH
LOGIC 1 OPENS SWITCH

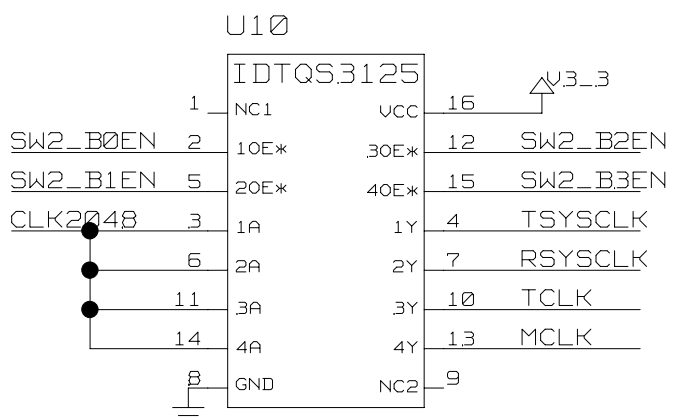

SWITCH 2 IS MEMORY MAPPED
TO PLD REGISTER 0X12
LOGIC 0 CLOSES SWITCH
LOGIC 1 OPENS SWITCH

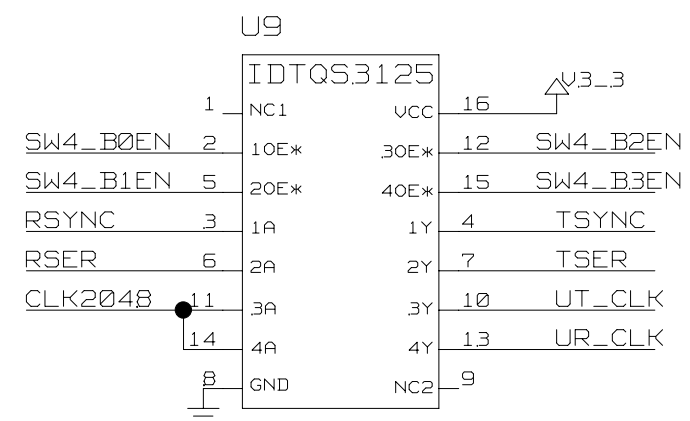

SWITCH 4 IS MEMORY MAPPED
TO PLD REGISTER 0X14
LOGIC 0 CLOSES SWITCH
LOGIC 1 OPENS SWITCH

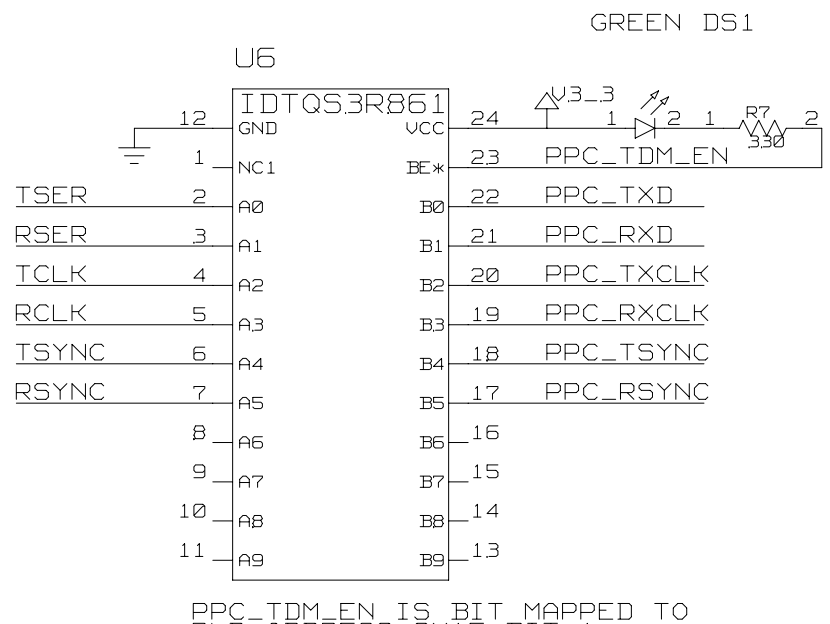

PPC_TDM_EN IS BIT MAPPED TO
PLD ADDRESS 0X15 BIT 1
LOGIC 0 CLOSES SWITCHES

TITLE: DS2156DK02A0	DATE: 10/04/02
ENGINEER: STEVE SCULLY	PAGE: 9 /13

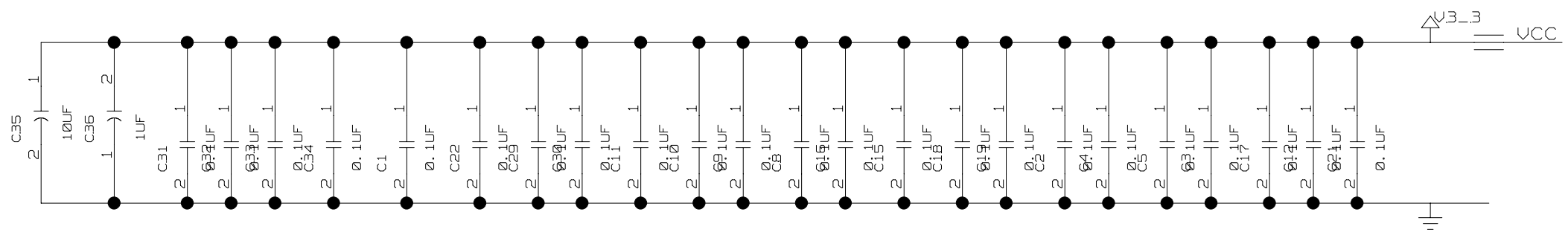

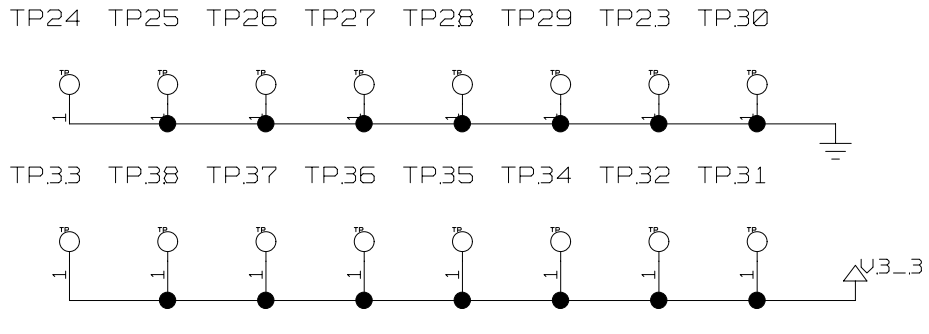

TITLE: DS2156DK02A0	DATE: 10/04/02
ENGINEER: STEVE SCULLY	PAGE: 10/13

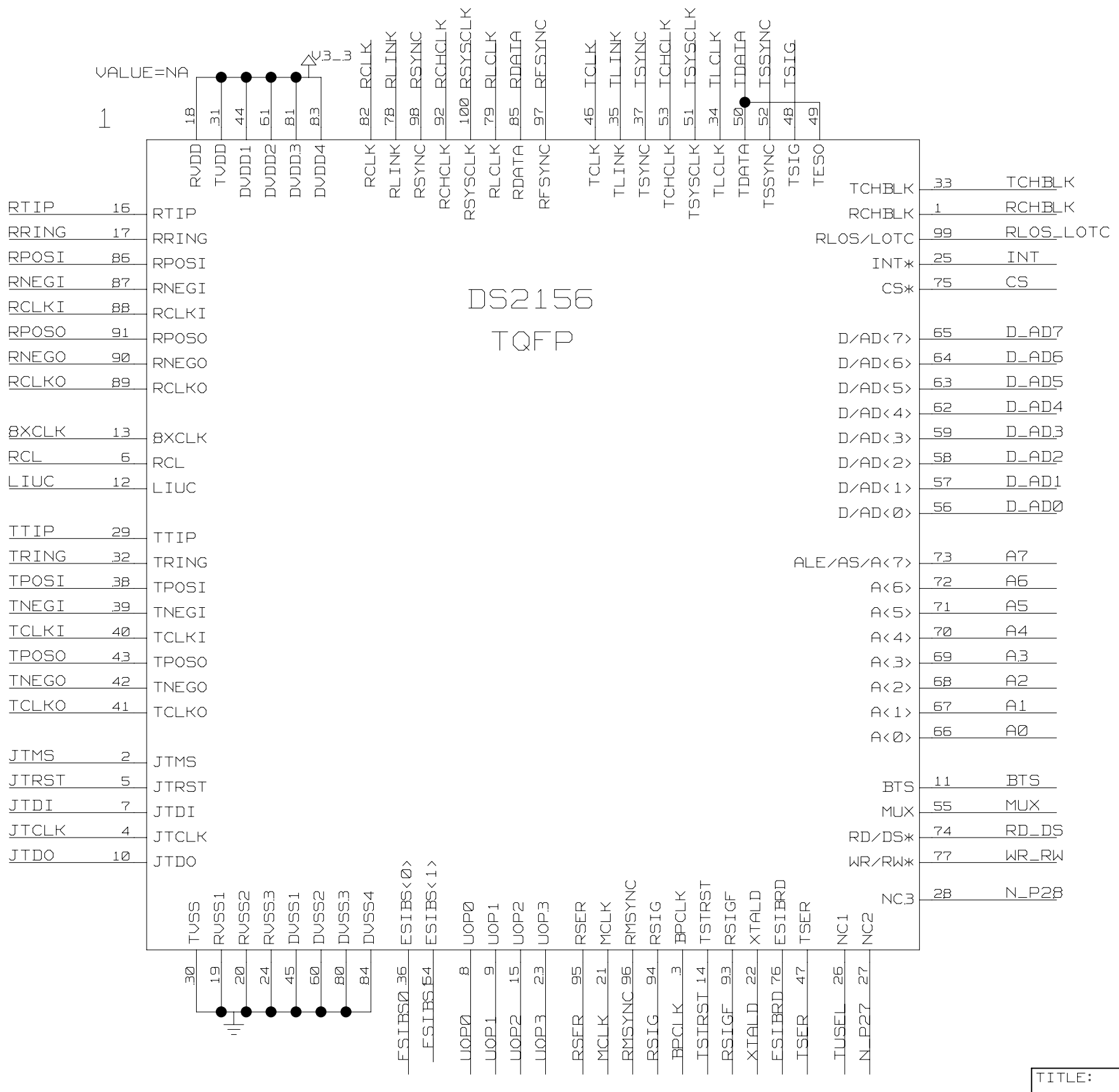

TITLE: DS2156DK02A0	DATE: 10/04/02
ENGINEER: STEVE SCULLY	PAGE: 11/13

```
*** Signal Cross-Reference for the entire design ***

8XCLK            2C8> 11C7>
A0               4C6<> 5C4<> 2B3< 11B3<
A1               4C6<> 5C4<> 2B3< 11B3<
A2               4C6<> 5C4<> 2B3< 11B3<
A3               4C6<> 5C4<> 2B3< 11B3<
A4               4C6<> 5C4<> 2B3< 11B3<
A5               4C6<> 5C4<> 2B3< 11B3<
A6               4C6<> 5C4<> 2B3< 11B3<
A7               4C6<> 5C4<> 2B3< 11B3<
A8               4C6<> 7B1<>
A9               4B6<> 7B1<>
A10              4C3<> 7C3<>
A11              4C3<> 5C1<> 7C3<>
A12              4C3<> 5C1<> 7B3<>
A13              4B3<> 7B3<>
A14              4B3<>
A15              4B3<>
BPCLK            2A5> 8D4> 11A4>
BP_EN            5C1<> 6B2< 6B6< 6C2< 6C6<
BTS              5D4<> 2B3< 5A6< 11A3<
CLK1544_T        7B3<> 9D8<> 4B2<
CLK2048          5D3<> 9B3<> 9B8<>
CLK16384_T       4B4<> 5D3<> 7B3<>
CS               5B4<> 2C3< 11C3<
CS_T             4B8<> 5B1<> 7B3<>
D_AD0            2B3<> 4B6<> 5C1<> 11B3<>
D_AD1            2C3<> 4B6<> 5C1<> 11B3<>
D_AD2            2C3<> 4B6<> 5C1<> 11C3<>
D_AD3            2C3<> 4B6<> 5C1<> 11C3<>
D_AD4            2C3<> 4B6<> 5C1<> 11C3<>
D_AD5            2C3<> 4B6<> 5C1<> 11C3<>
D_AD6            2C3<> 4A6<> 5C1<> 11C3<>
D_AD7            2C3<> 4A6<> 5D1<> 11C3<>
ESIBRD           2A5<> 11A4<> 5A8<
ESIBS0           2A6<> 11A6<>
ESIBS1           2A6<> 11A5<>
INT              2C3> 4A8<> 5A2<> 11C3> 5A6<
INT_INDICATOR    5A2<>
JTCLK            2A8< 11A7<
JTDI             2A8< 11A7<
JTDO             2A8> 11A7>
JTMS             2B8< 11B7<
JTRST            2B8< 5A8< 11A7<
LIUC             8B4> 2C8< 5A6< 11B7<
MCLK             9B6<> 9C6<> 2A5< 11A5<
MUX              5C4<> 2A3< 5A8< 11A3<
NIMD8            4B2<>
NIMD9            4B2<>
NIMD10           4B2<>
NIMD11           4B2<>
NIMD12           4B2<>
NIMD13           4B2<>
NIMD14           4B2<>
NIMD15           4C2<>
N_P27            2A4< 11A4<
N_P28            2A3< 11A3<
PPC_RSYNC        4C8<> 9A4<>
PPC_RXCLK        4C8<> 9A4<>
PPC_RXD          4C8<> 9A4<>
PPC_TDM_EN       5C1<> 9A4<
PPC_TSYNC        4B8<> 9A4<>
PPC_TXCLK        4C8<> 9A4<>
PPC_TXD          4C8<> 9A4<>
RCHBLK           2C3> 8D4> 11C3>
RCHCLK           2D6> 8D7> 11D5>
RCL              2C8> 11C7>
RCLK             2D6> 9A6<> 9C1<> 9C1<> 9D1<> 11D6>

RCLKI            8A7> 2C8< 5A8< 11C7<
RCLKO            2C8> 8A7> 11C7>
RDATA            2D6> 11D5>
RD_DS            5C4<> 2A3< 11A3<
RESET_OUT        4B6<> 5B1<> 7B1<>
RFSYNC           2D6> 8C7> 11D5>
RLCLK            2D6> 8B7> 11D5>

RLINK            2D6> 8B7> 11D6>
RLOS_LOTC        2C3> 5B2<> 11C3>
RLOS_LOTC_INDICATOR  5A2<>
RMSYNC           2A5> 8C7> 11A5>
RNEGI            8B7> 2C8< 5A8< 11C7<
RNEGO            2C8> 8A7> 11C7>
RPOSI            8B7> 2C8< 5A8< 11C7<
RPOSO            2C8> 8A7> 11C7>
RRING            2C8< 3B8< 11C7<
RSER             2A5> 8C7> 9A6<> 9B3<> 11A5>
RSIG             2A5> 8D7> 11A5>
RSIGF            2A5> 8D7> 11A4>
RSYNC            2D6<> 9A6<> 9B3<> 9C1<> 11D5<>
                 5A6<
RSYSCLK          9B6<> 9C3<> 9D6<> 2D6< 5A8< 11D5<
RTIP             2C8< 3B8< 11C7<
RW_T             4B6<> 5B1<> 7B1<>
RXADDR0          7B8<> 8D8
RXADDR1          7B6<> 8D8
RXADDR2          7B8<> 8D8
RXADDR3          7B8<> 8C8
RXADDR4          7B6<> 8C8
RXA_0            6B2<> 8D7>
RXA_1            6B7<> 8D7>
RXA_2_RXCLAV_1   6A7<> 6B2<> 8D7>
RXA_3_RXCLAV_2   6A7<> 6C7<> 8C7>
RXA_4_RXCLAV_3   6A7<> 6B2<> 8C7>
RXCLAV0          7A8<> 8C8
RXCLAV_0         6A7<> 8C7>
RXDATA_0         6B7<> 7C8<> 8B7> 8B8
RXDATA_1         6A2<> 7C6<> 8B7> 8B8
RXDATA_2         6B7<> 7C8<> 8B7> 8B8
RXDATA_3         6B2<> 7C6<> 8B7> 8B8
RXDATA_4         6B7<> 7C6<> 8A7> 8A8
RXDATA_5         6B2<> 7C8<> 8A7> 8A8
RXDATA_6         6B7<> 7C6<> 8A7> 8A8
RXDATA_7         6B2<> 7C8<> 8A7> 8A8
RXENA            6A2<> 8D4>
RXENB            7A6<> 8D5
RXPRTY           6B5<>
RXSOC            6B7<> 7B6<> 8D4> 8D5
SNIM_B2          4C2<>
SNIM_B3          4C2<>
SNIM_B4          4C2<>
SNIM_B5          4C2<>
SNIM_B6          4C2<>
SNIM_B7          4C2<>
SW1_B0EN         5A4<> 9D8<
SW1_B1EN         5A4<> 9D8<
SW1_B2EN         5A3<> 9D6<
SW1_B3EN         5A3<> 9D6<
SW2_B0EN         5A3<> 9B8<
SW2_B1EN         5A3<> 9B8<
SW2_B2EN         5A3<> 9B6<
SW2_B3EN         5A3<> 9B6<
SW3_B0EN         5A3<> 9D3<
SW3_B1EN         5A3<> 9D3<
SW3_B2EN         5A3<> 9D1<
SW3_B3EN         5A3<> 9D1<
SW4_B0EN         5B4<> 9B3<
SW4_B1EN         5B4<> 9B3<
SW4_B2EN         5B4<> 9B2<
SW4_B3EN         5B4<> 9B2<
TCHBLK           2D3> 8C4> 11C3>
TCHCLK           2D5> 11D4> 8A1<
TCK              5B8<> 5D8<
TCLK             9A6<> 9B6<> 9C3<> 9C6<> 2D5< 5A6<
                 11D5<
TCLKI            8B4> 2B8< 5A8< 11B7<
TCLKO            2B8> 8A4> 11B7>
TDATA            2D5<> 11D4<>
TDI              5B8<> 5D7<
TDO              5B8<> 5C7<
TIM5V            4D3<> 4D8<>
TLCLK            2D5> 8C4> 11D4>
TLINK            8C4> 2D5< 5B6< 11D5<
TMS              5B8<> 5C7<

TNEGI            8B4> 2B8< 5A8< 11B7<
TNEGO            2B8> 8A4> 11B7>
TPOSI            8C4> 2B8< 5A8< 11B7<
TPOSO            2B8> 8A4> 11B7>
TRING            2B8> 11B7> 3C8<
TSER             8A4> 9A6<> 9B2<> 2A5< 5A8< 11A4<
TSIG             8D1> 2D5< 5B6< 11D4<
TSSYNC           9C3<> 2D5< 5B6< 8A1< 11D4<
TSTRST           2A5< 5A8< 11A4<
TSYNC            2D5<> 9A6<> 9B2<> 11D5<> 5A6<
TSYSCLK          8D1> 9B6<> 9D3<> 9D6<> 2D5< 5A8<
                 11D4<
TTIP             2B8> 11B7> 3C8<
TUSEL            5D2<> 2A4< 11A4<
TXADDR0          7B5<> 8D5
TXADDR1          7B4<> 8C5
TXADDR2          7B4<> 8C5
TXADDR3          7B5<> 8C5
TXADDR4          7B4<> 8C5
TXA_0            6C2<> 8D4>
TXA_1            6C7<> 8C4>
TXA_2_TXCLAV_1   6B2<> 6C2<> 8C4>
TXA_3_TXCLAV_2   6C7<> 6C7<> 8C4>
TXA_4_TXCLAV_3   6C2<> 6C2<> 8C4>
TXCLAV0          7B5<> 8B5
TXCLAV_0         6C7<> 8B5
TXDATA_0         6C7<> 7C5<> 8B4> 8B5
TXDATA_1         6C2<> 7C4<> 8B4> 8B5
TXDATA_2         6C7<> 7C5<> 8A4> 8A5
TXDATA_3         6C2<> 7C4<> 8A4> 8A5
TXDATA_4         6C7<> 7C4<> 8A4> 8A5
TXDATA_5         6C2<> 7C5<> 8A4> 8A5
TXDATA_6         6C7<> 7C4<> 8D1> 8D2
TXDATA_7         6C2<> 7C5<> 8D1> 8D2
TXENA            6C2<> 8C1>
TXENABLE         7B4<> 8C2
TXPRTY           6C5<>
TXSOC            6C7<> 7B4<> 8B1> 8B2
UOP0             2A6> 8B1> 11A5>
UOP1             2A6> 8C1> 11A5>
UOP2             2A6> 11A5>
UOP3             2A6> 8D4> 11A5>
UR_ADDR0         8D8
UR_ADDR1         8D8
UR_ADDR2         8D8
UR_ADDR3         8C8
UR_ADDR4         8C8
UR_CLAV          8C8
UR_CLK           9B2<> 6A1< 7A8< 8A2<
UR_DATA0         8B8
UR_DATA1         8B8
UR_DATA2         8B8
UR_DATA3         8B8
UR_DATA4         8A8
UR_DATA5         8A8
UR_DATA6         8A8
UR_DATA7         8A8
UR_ENB           8D5
UR_SOC           8D5
UT_ADDR0         8D5
UT_ADDR1         8C5
UT_ADDR2         8C5
UT_ADDR3         8C5
UT_ADDR4         8C5
UT_CLAV          8B4>
UT_CLK           9B2<> 6C1< 7B4< 8A2<
UT_DATA0         8B5
UT_DATA1         8B5
UT_DATA2         8A5
UT_DATA3         8A5
UT_DATA4         8A5
UT_DATA5         8A5
UT_DATA6         8D2
UT_DATA7         8D2
UT_ENB           8C2
UT_SOC           8B2
WE_T             4B6<> 5B1<> 7B1<>

WR_RW            5C4<> 2A3< 11A3<
XTALD            2A5> 11A4>
```

TITLE: DS2156DK02A0	DATE: 10/04/02
ENGINEER: STEVE SCULLY	PAGE: 12/13

*** Part Cross-Reference for the entire design ***

1	DS2156_TQFP	11D7
C1	CAP	10B5
C2	CAP	10B3
C3	CAP	10B2
C4	CAP	10B2
C5	CAP	10B2
C7	CAP	3D6
C8	CAP	10B4
C9	CAP	10B4
C10	CAP	10B4
C11	CAP	10B4
C12	CAP	10B2
C13	CAP	8A1
C14	CAP	8A1
C15	CAP	10B3
C16	CAP	10B3
C17	CAP	10B2
C18	CAP	10B3
C19	CAP	10B3
C21	CAP	10B2
C22	CAP	10B5
C23	CAP	3A6
C24	CAP	3C5
C25	CAP	3B5
C26	CAP	3A5
C27	CAP	3D5
C29	CAP	10B4
C30	CAP	10B4
C31	CAP	10B6
C32	CAP	10B5
C33	CAP	10B5
C34	CAP	10B5
C35	CAP	10B6
C36	CAP	10B6
DS1	LED	9B4
DS2	LED	5A2
DS3	LED	5A2
DS4	LED	6D5
DS5	LED	5A3
DS6	LED	5A4
DS7	LED	5A3
DS8	LED	5A4
DS9	LED	5A4
DS10	LED	5A3
DS11	LED	5A4
DS12	LED	5A3
DS13	LED	5A3
DS14	LED	5A3
DS15	LED	5A3
DS16	LED	5B5
DS17	LED	5B5
DS18	LED	5A3
F1	FUSE	3B4
F2	FUSE	3B4
F3	FUSE	3D4
F4	FUSE	3C4
F5	FUSE	3D4
F6	FUSE	3A3
J1	CONN_50P1	7D5
J2	CONN_50P1	7D7
J3	CONN_BANTAM_IPC	3B1
J4	CONN_BANTAM_IPC	3C1
J5	CONN_BNC_5PIN	3A3
J6	CONN_BNC_5PIN	3D2
J7	CONN_50P2	6D4
J8	CONN_50P2	4D3
J9	CONN_50P2	4D7
JT10	CONN_10P	5C8
L1	CHOKE_DUAL_T1	3B4 3C4
R1	RES1	4B2
R2	RES	3B7
R3	RES	3B7
R4	RES	6A2
R5	RES	6C2
R6	RES1	5A7
R7	RES	9B4
R8	RES1	5A2
R9	RES1	5A7
R10	RES1	5A7
R11	RES1	5A2
R12	RES	6D5
R13	RES1	5B6
R14	RES1	7B4
R15	RES1	5B6
R16	RES1	5A7
R17	RES1	5B6
R18	RES1	5A6
R19	RES1	5A6
R21	RES1	7A8
R22	RES1	5A7
R23	RES1	5A7
R24	RES1	5B8
R25	RES1	5D7
R26	RES1	5D8
R27	RES1	5D8
R28	RES1	5A7
R29	RES1	5A6
R30	RES	5A3
R31	RES	5A3
R32	RES1	5A6
R33	RES1	8A1
R34	RES1	8A1
R35	RES	5A3
R36	RES	5A3
R37	RES1	5A6
R38	RES	5A7
R39	RES	5A3
R40	RES	5A4
R41	RES	5A3
R42	RES	5A4
R43	RES	5A3
R44	RES1	5A7
R45	RES	5A3
R46	RES1	5B7
R47	RES1	5A7
R48	RES1	5A6
R49	RES1	5A7
R50	RES	5A3
R51	RES	5B4
R52	RES	5B4
R53	RES	5A3
R54	RES1	3B6
R55	RES1	3B6
R56	RES	3B5
R57	RES	3B6
R58	RES	3D7
R59	RES	3C7
R60	RES	3A5
R61	RES1	5A7
RJ1	RJ48_CON	3C3
SW1	SWITCH_DPDT_SLIDE_6P	3A6
T1	XFMR_2IN_4OUT_U	3B5 3D5
TP1	TSTPNT_SNG	7B2
TP2	TSTPNT_SNG	7B2
TP3	TSTPNT_SNG	7B2
TP4	TSTPNT_SNG	7C2
TP5	TSTPNT_SNG	7C2
TP6	TSTPNT_SNG	7B2
TP7	TSTPNT_SNG	7B2
TP8	TSTPNT_SNG	7B2
TP9	TSTPNT_SNG	7B2
TP10	TSTPNT_SNG	7B2
TP11	TSTPNT_SNG	7B2
TP12	TSTPNT_SNG	5D2
TP13	TSTPNT_SNG	5D2
TP14	TSTPNT_SNG	5A6
TP15	TSTPNT_SNG	5A6
TP16	TSTPNT_SNG	7B2
TP17	TSTPNT_SNG	5D2
TP18	TSTPNT_SNG	5A6
TP20	TSTPNT_SNG	7B2
TP21	TSTPNT_SNG	7B1
TP22	TSTPNT_SNG	7B1
TP23	TSTPNT_SNG	10A7
TP24	TSTPNT_SNG	10A8
TP25	TSTPNT_SNG	10A7
TP26	TSTPNT_SNG	10A7
TP27	TSTPNT_SNG	10A7
TP28	TSTPNT_SNG	10A7
TP29	TSTPNT_SNG	10A7
TP30	TSTPNT_SNG	10A7
TP31	TSTPNT_SNG	10A4
TP32	TSTPNT_SNG	10A4
TP33	TSTPNT_SNG	10A5
TP34	TSTPNT_SNG	10A5
TP35	TSTPNT_SNG	10A5
TP36	TSTPNT_SNG	10A5
TP37	TSTPNT_SNG	10A5
TP38	TSTPNT_SNG	10A5
U1	IDTQS3R861_U	6B3
U2	IDTQS3R861_U	6D3
U3	IDTQS3R861_U	6B6
U4	IDTQS3R861_U	6D6
U5	XILINX_XC9572XL	5D4 5D7
U6	IDTQS3R861_U	9B5
U7	IDTQS3125_U	9D3
U8	IDTQS3125_U	9D7
U9	IDTQS3125_U	9B3
U10	IDTQS3125_U	9B7
U11	DS2156_TQFP	2D7
Z1	SIDACTOR_2	3C4
Z2	SIDACTOR_2	3D5
Z3	SIDACTOR_2	3A5
Z4	SIDACTOR_2	3B5
Z5	SIDACTOR_2	3C6
Z6	SIDACTOR_2	3A4
Z7	SIDACTOR_2	3C4
Z8	SIDACTOR_2	3A4
Z9	SIDACTOR_2	3C4
Z10	SIDACTOR_2	3B4

TITLE: DS2156DK02A0	DATE: 10/04/02
ENGINEER: STEVE SCULLY	PAGE: 13/13