DS21Q55DK
Quad T1/E1/J1 Transceiver Design Kit Daughter Card

www.maxim-ic.com

GENERAL DESCRIPTION

The DS21Q55DK is an easy-to-use evaluation board for the DS21Q55 quad T1/E1/J1 transceiver. The DS21Q55DK is intended to be used as a daughter card with the DK101 motherboard or the DK2000 motherboard. The DS21Q55DK comes complete with a DS21Q55 quad SCT, transformers, termination resistors, configuration switches, line-protection circuitry, network connectors, and motherboard connectors. The DK101/DK2000 motherboard and Dallas' ChipView software give point-and-click access to configuration and status registers from a Windows®-based PC. On-board LEDs indicate receive loss-of-signal and interrupt status. An on-board FPGA contains mux logic to connect framer ports to one another or to the DK2000 in a variety of configurations.

Each DS21Q55DK is shipped with a free DK101 motherboard. For complex applications, the DK2000 high-performance demo kit motherboard can be purchased separately.

Windows is a registered trademark of Microsoft Corp.

ORDERING INFORMATION

PART	DESCRIPTION
DS21Q55DK	DS21Q55 Demo Kit Daughter Card (with included DK101 Motherboard)

FEATURES

- **Demonstrates Key Functions of DS21Q55 Quad T1/E1/J1 Transceiver**
- **Includes DS21Q55 Quad LIU, Transformers, BNC, and RJ45 Network Connectors and Termination Passives**
- **Compatible with DK101 and DK2000 Demo Kit Motherboards**
- **DK101/DK2000 and ChipView Software Provide Point-and-Click Access to the DS21Q55 Register Set**
- **All Equipment-Side Framer Pins are Easily Accessible for External Data Source/Sink**
- **Memory-Mapped FPGA Provides Flexible Clock/Data/Sync Connections Among Framer Ports and DK2000 Motherboard**
- **LEDs for Loss-of-Signal and Interrupt Status**
- **Easy-to-Read Silk-Screen Labels Identify the Signals Associated with All Connectors, Jumpers and LEDs**
- **Network Interface Protection for Overvoltage and Overcurrent Events**

DESIGN KIT CONTENTS

DS21Q55DK Design Kit Daughter Card
DK101 Low-Cost Motherboard
CD-ROM
- ChipView Software
- DS21Q55DK Data Sheet
- DK101 Data Sheet
- DS21Q55 Data Sheet
- DS21Q55 Errata Sheet

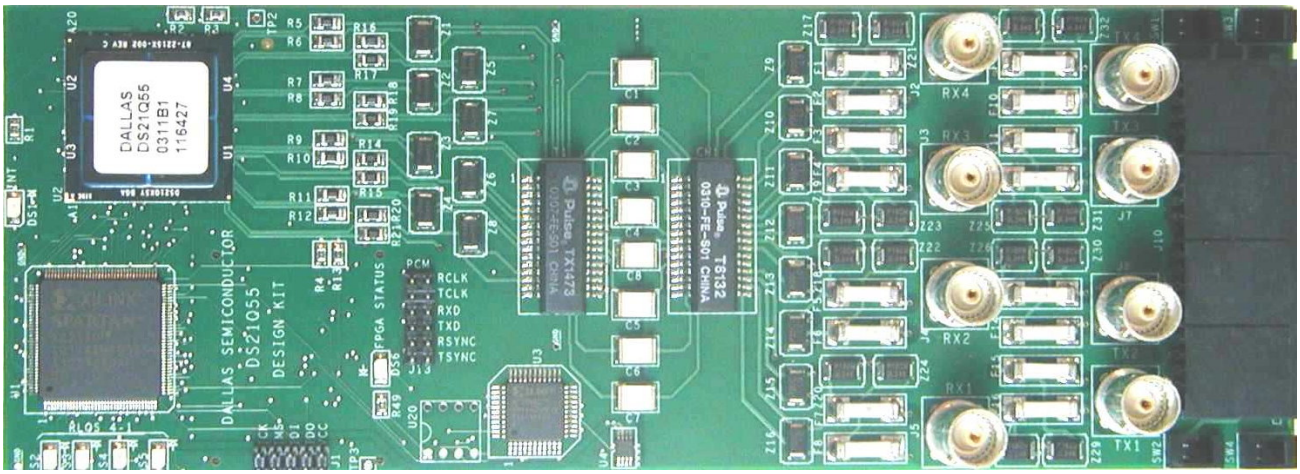

REV: 110106

TABLE OF CONTENTS

COMPONENT LIST **3**

BOARD FLOORPLAN **4**

ERRATA **4**

BASIC OPERATION **4**

HARDWARE CONFIGURATION 4

Using the DK101 Processor Board: *4*

Using the DK2000 Processor Board: *4*

General *5*

Miscellaneous *5*

QUICK SETUP (DEMO MODE) 5

QUICK SETUP (REGISTER VIEW) 5

ADDRESS MAP **6**

FPGA REGISTER MAP 7

ID REGISTERS **7**

CONTROL REGISTERS **8**

FPGA CONTROL EXAMPLES **15**

DS21Q55 INFORMATION **17**

DS21Q55DK INFORMATION **17**

TECHNICAL SUPPORT **17**

SCHEMATICS **17**

DOCUMENT REVISION HISTORY **17**

LIST OF TABLES

Table 1. Daughter Card Address Map 6
Table 2. FPGA Register Map 7
Table 3. TCLKx Source Definition 8
Table 4. TSYSCLKx Source Definition 9
Table 5. RSYSCLKx Source Definition 9
Table 6. RSYNCx Function Definition 11
Table 7. TSERx Source Definition 12
Table 8. FPGA Configuration for Scenario #1 (Port 1, T1 Mode) 15
Table 9. FPGA Configuration for Scenario #2 (Port 1, T1 Mode) 16
Table 10. DS21Q55 Partial Configuration for Scenario #2 (Port 1, T1 Mode) 16

COMPONENT LIST

DESIGNATION	QTY	DESCRIPTION	SUPPLIER	PART
C1–C8	8	0.22μF, 50V capacitors	Phycomp	PCF1150CT-ND
C9, C10, C12, C18, C22–C33, C35, C38–C43	23	0.1μF 10%, 16V ceramic capacitors (0603)	Phycomp	06032R104K7B20D
C11, C13–C15	4	0.1μF 10%, 25V ceramic capacitors (1206)	Panasonic	ECJ-3VB1E104K
C16, C17, C19–C21, C34, C36, C45	8	1μF 10%, 16V ceramic capacitors (1206)	Panasonic	ECJ-3YB1C105K
C37, C44	2	10μF 20%, 10V ceramic capacitors (1206)	Panasonic	ECJ-3YB1A106M
CH1	1	Quad port choke	Pulse	T8132
DS1	1	LED, red, SMD	Panasonic	LN1251C
DS2–DS6	5	LED, green, SMD	Panasonic	LN1351C
F1–F16	16	1.25A, 250V fuse, SMT	Teccor	F1250T
J1	1	10-pin, dual row, vertical jumper	Digi-Key	S2012-05-ND
J2–J9	8	5-pin connectors, BNC right-angle vertical	Cambridge	CP-BNCPC-004
J10	1	8-pin 4-port jack, right-angle RJ45	Molex	43223-8140
J11, J12	2	50-pin socket, SMD, dual row, vertical	Samtec	TFM-125-02-S-D-LC
J13	1	12-pin connector, dual row, vertical	Digi-Key	S2012-06-ND
R1, R2, R4	3	10kΩ 1%, 1/10W resistors (0805)	Panasonic	ERJ-6ENF1002V
R3, R26, R39, R41, R45	5	10kΩ 5%, 1/10W resistors (0805)	Panasonic	ERJ-6GEYJ103V
R5–R12, R14–R21, R48	17	0Ω 5%, 1/8W resistors (1206)	Panasonic	ERJ-8GEYJ0R00V
R13	1	470Ω 5%, 1/10W resistor (0805)	Panasonic	ERJ-6GEYJ471V
R22–R25	4	51.1Ω 1%, 1/10W resistors (0805)	Panasonic	ERJ-6ENF51R1V
R27, R28, R38	3	1.0kΩ 1%, 1/10W resistors (0805)	Panasonic	ERJ-6ENF1001V
R29–R36	8	61.9Ω 1%, 1/8W resistors (1206)	Panasonic	ERJ-8ENF61R9V
R37, R47	2	Not populated	Panasonic	Not populated
R40, R42–R44, R46, R49	6	330Ω 0.1%, 1/10W MF resistors (0805)	Panasonic	ERA-6YEB331V
SW1–SW4	4	6-PIN TH Switch DPDT	Tyco	SSA22
T1	1	XFMR, XMIT/RCV, 1 to 2, SMT 32-pin	Pulse	TX1473
U1	1	XILINX spartan 2.5V FPGA 144-pin, 20 x 20 TQFP	Xilinx	XC2S50-5TQ144C
U2	1	Quad T1/E1/J1 transceiver 256-pin BGA, 0°C to +70°C multichip module	Dallas Semiconductor	DS21Q55
U3	1	1M PROM for FPGA 44-pin TQFP	Xilinx	XC18V01VQ44C_U
U4	1	8-pin μMAX, SO 2.5V or ADJ	Maxim	MAX1792EUA25
U20	1	Serial configuration EEPROM for XILINX 65kb, 8-DIP	Atmel	AT17LV65EUA-NOPOP
Z1–Z8	8	50A, 6V Sidactor, DO214 SMD	Teccor	P0080SAMC
Z9–Z16	8	500A, 25V Sidactor, DO214 SMD	Teccor	P0300SCMC
Z17–Z32	16	500A, 170V Sidactor, DO214 SMD	Teccor	P1800SCMC

BOARD FLOORPLAN

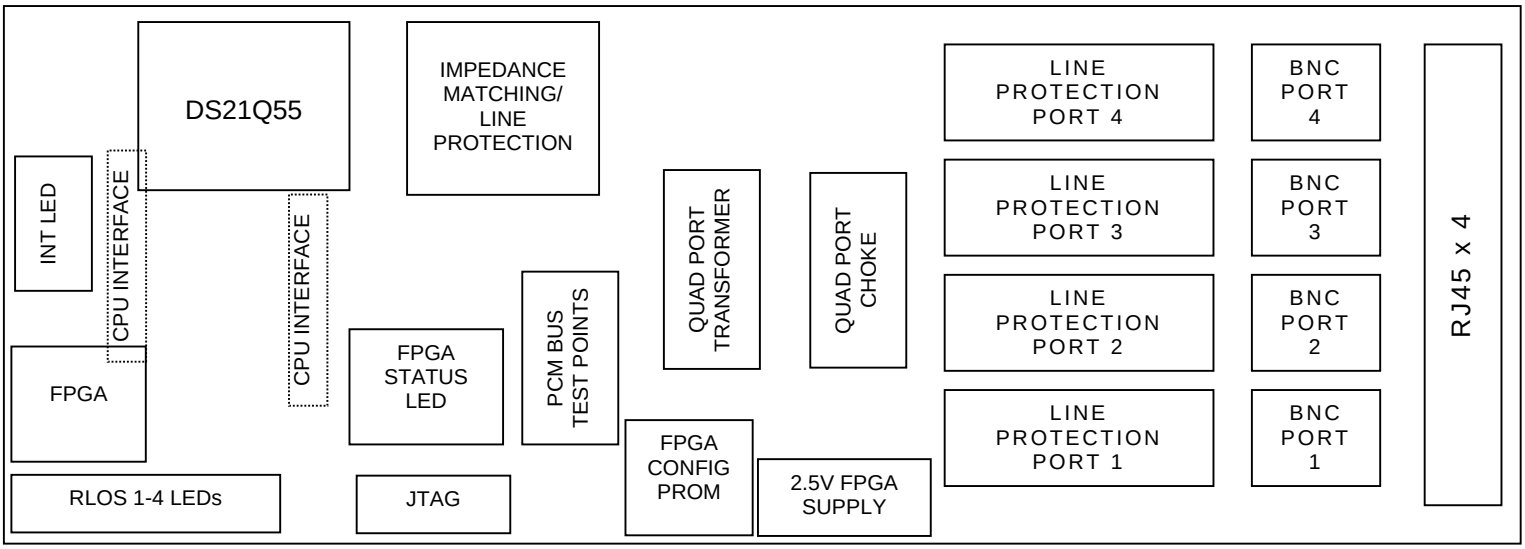

ERRATA

- Connector J1 has silk-screen mislabeled such that the text TMS and TCK should be swapped. Worded differently, TCK belongs to pin 7 and TMS belongs to pin 9.
- Switches SW1 to SW4 are missing silk screen to indicate which side is grounded. Sliding the switch toward the BNC grounds the BNC shell (E1 mode). For T1 mode the switch should be slid away from the BNC.

BASIC OPERATION

This design kit relies upon several supporting files, which are available for downloading on our website at www.maxim-ic.com/telecom. See the DS21Q55DK QuickView data sheet for these files.

Hardware Configuration

Using the DK101 Processor Board:

- Connect the daughter card to the DK101 processor board.
- Supply 3.3V to the banana-plug receptacles marked GND and VCC_3.3V. (The external 5V connector is unused. Additionally, the 'TIM 5V supply' headers are unused.)
- All processor board DIP-switch settings should be in the ON position with exception of the flash-programming switch, which should be OFF.
- From the Programs menu, launch the host application named ChipView.EXE. Run the ChipView application. If the default installation options were used, click the Start button on the Windows toolbar and select Programs → ChipView → ChipView.

Using the DK2000 Processor Board:

- Connect the daughter card to the DK2000 processor board.
- Connect J1 to the power supply that is delivered with the kit. Alternately, a PC power supply may be connected to connector J2.
- From the Programs menu, launch the host application named ChipView.EXE. Run the ChipView application. If the default installation options were used, click the Start button on the Windows toolbar and select Programs → ChipView → ChipView.

General

- Upon power-up, the RLOS LEDs (green) will not be lit, the INT LED (red) will not be lit, but the FPGA status LED (green) will be lit.
- When operating in E1 mode, slide SW1–SW4 such that the BNC shell is grounded (to the left, as shown in the board floorplan). When operating in T1 mode, ensure that SW1–SW4 are slid to the right as shown in the board floorplan.

Miscellaneous

- Clock frequencies and certain pin bias levels are provided by a register-mapped FPGA, which is on the DS21Q55 daughter card.
- The definition file for this FPGA is named DS21Q55DC_FPGA.def. The definitions are located on page 7. A drop-down menu on the top of the screen allows for switching between definition files.
- All files referenced above are available for download as described in the section marked “BASIC OPERATION”

Quick Setup (Demo Mode)

- The PC will load ChipView offering a choice between DEMO MODE, REGISTER VIEW, and TERMINAL MODE. Select Demo Mode.
- The program will request a configuration file, select among the displayed files (DS2155_E1_DSNCOM_DRVR.cfg or DS2155_T1_DSNCOM_DRVR.cfg).
- The Demo Mode screen will appear. Upon external loopback, the LOS and OOF indicators will extinguish.
- Note: Demo Mode interacts with the device driver, which is resident in the DK101/DK2000 firmware. The current implementation of this driver is for one device. As such, the demo mode will only interact with **Port 1**. With minor changes, the device driver is extendible to *N* devices.

Quick Setup (Register View)

- The PC will load ChipView offering a choice between DEMO MODE, REGISTER VIEW, and TERMINAL MODE. Select Register View.
- The program will request a definition file. Select DS21Q55DC_FPGA.def; through the ‘links’ section this will also load DS21Q55DC.def.
- The Register View Screen will appear, showing the register names, acronyms, and values for the DS21Q55
- Predefined register settings for several functions are available as initialization files.
  - INI files are loaded by selecting the menu File→Reg Ini File→Load Ini File
  - Load the INI file DS21Q55_T1_BERT_ESF.ini
  - After loading the INI file, the following may be observed:
    - The RLOS LEDs (green) light upon external loopback.
    - All four ports of the DS2Q155 begin transmitting a Daly pattern. When external loopback is applied, the BERT bit count registers BBC1–3 and BEC1–3 may be updated by clearing and setting BC1.LC and clicking the ‘Read All’ button.

ADDRESS MAP

DK101 Daughter Card address space begins at 0x81000000.
DK2000 Daughter Card address space begins at:

0x30000000 for slot 0
0x40000000 for slot 1
0x50000000 for slot 2
0x60000000 for slot 3

All offsets given below are relative to the beginning of the daughter card address space (shown above).

Table 1. Daughter Card Address Map

OFFSET	DEVICE	DESCRIPTION
0X0000 to 0X0015	FPGA	Board identification and clock/signal routing
0X1000 to 0X10ff	T1/E1/J1 Transceiver #1	DS21Q55 T1/E1/J1 transceiver, port 1
0X2000 to 0X20ff	T1/E1/J1 Transceiver #2	DS21Q55 T1/E1/J1 transceiver, port 2
0X3000 to 0X30ff	T1/E1/J1 Transceiver #3	DS21Q55 T1/E1/J1 transceiver, port 3
0X4000 to 0X40ff	T1/E1/J1 Transceiver #4	DS21Q55 T1/E1/J1 transceiver, port 4

Registers in the FPGA may be easily modified using the ChipView host-based user-interface software along with the definition file named “DS21Q55DC_FPGA.def.”

FPGA Register Map

Table 2. FPGA Register Map

OFFSET	REGISTER NAME	TYPE	DESCRIPTION
0X0000	BID	Read-Only	Board ID
0X0002	XBIDH	Read-Only	High-Nibble Extended Board ID
0X0003	XBIDM	Read-Only	Middle-Nibble Extended Board ID
0X0004	XBIDL	Read-Only	Low-Nibble Extended Board ID
0X0005	BREV	Read-Only	Board FAB Revision
0X0006	AREV	Read-Only	Board Assembly Revision
0X0007	PREV	Read-Only	PLD Revision
0X0011	MCSR	Control	DS21Q55 MCLK Pin Source
0X0012	TCSR	Control	DS21Q55 TCLK Pin Source
0X0013	SYSCLKT	Control	DS21Q55 TSYSCLK Pin Setting
0X0014	SYSCLKR	Control	DS21Q55 RSYSCLK Pin Setting
0X0015	SYNC1	Control	DS21Q55 TSYNC Source
0X0016	SYNC2	Control	DS21Q55 TSSYNC Source
0X0017	SYNC3	Control	DS21Q55 RSYNC Source
0X0018	TSERS	Control	TSER Source
0X0019	PRSER	Control	PCM RSER Source
0X001A	PSYNC	Control	PCM RSYNC/TSYNC Source
0X001B	PCLK	Control	PCM RCLK/TCLK Source

ID REGISTERS

BID: BOARD ID (Offset=0X0000)

BID is read only with a value of 0xD

XBIDH: HIGH NIBBLE EXTENDED BOARD ID (Offset=0X0002)

XBIDH is read only with a value of 0x0

XBIDM: MIDDLE NIBBLE EXTENDED BOARD ID (Offset=0X0003)

XBIDM is read only with a value of 0x1

XBIDL: LOW NIBBLE EXTENDED BOARD ID (Offset=0X0004)

XBIDL is read only with a value of 0x6

BREV: BOARD FAB REVISION (Offset=0X0005)

BREV is read only and displays the current fab revision

AREV: BOARD ASSEMBLY REVISION (Offset=0X0006)

AREV is read only and displays the current assembly revision

PREV: PLD REVISION (Offset=0X0007)

PREV is read only and displays the current PLD firmware revision

CONTROL REGISTERS

Register Name: **MCSR**
Register Description: **DS21Q55 MCLK Pin Source**
Register Offset: **0x0011**

Bit #	7	6	5	4	3	2	1	0
Name	—	—	—	—	—	—	MSRCB	MSRCA
Default	—	—	—	—	—	—	1	1

Bit 0: DS21Q55 Port 1 and 3 MCLK Source (MSRCA)
0 = Connect MCLK 1 (controls port 1 and 3) to the 1.544MHz clock
1 = Connect MCLK 1 (controls port 1 and 3) to the 2.048MHz clock

Bit 1: DS21Q55 Port 2 and 4 MCLK Source (MSRCA)
0 = Connect MCLK 2 (controls port 2 and 4) to the 1.544MHz clock
1 = Connect MCLK 2 (controls port 2 and 4) to the 2.048MHz clock

Register Name: **TCSR**
Register Description: **DS21Q55 TCLK Pin Source**
Register Offset: **0x0012**

Bit #	7	6	5	4	3	2	1	0
Name	T4S1	T4S0	T3S1	T3S0	T2S1	T2S0	T1S1	T1S0
Default	0	0	0	0	0	0	0	0

Bit 0 to 1: DS21Q55 Port 1 TCLK Source (T1S0, T1S1)
The source for TCLK 1 is Defined as shown in Table 3.

Bit 2 to 3: DS21Q55 Port 2 TCLK Source (T2S0, T2S1)
The source for TCLK 2 is Defined as shown in Table 3.

Bit 4 to 5: DS21Q55 Port 3 TCLK Source (T3S0, T3S1)
The source for TCLK 3 is Defined as shown in Table 3.

Bit 6 to 7: DS21Q55 Port 4 TCLK Source (T4S0, T4S1)
The source for TCLK 3 is Defined as shown in Table 3.

Table 3. TCLKx Source Definition

TxS1, TxS0	TCLK CONNECTION
00	Drive $TCLK_X$ with the 1.544MHz clock
01	Drive $TCLK_X$ with the 2.048MHz clock
10	Drive $TCLK_X$ with $RCLK_X$
11	N/A

Register Name: **SYSCLKT**
Register Description: **DS21Q55 TSYSCLK Pin Setting**
Register Offset: **0x0013**

Bit #	7	6	5	4	3	2	1	0
Name	R4S1	R4S0	R3S1	R3S0	R2S1	R2S0	R1S1	R1S0
Default	0	0	0	0	0	0	0	0

Bit 0 to 1: DS21Q55 Port 1 TSYSCLK Source (R1S0, R1S1)
The source for TSYSCLK 1 is Defined as shown in Table 4.

Bit 2 to 3: DS21Q55 Port 2 TSYSCLK Source (R2S0, R2S1)
The source for TSYSCLK 2 is Defined as shown in Table 4.

Bit 4 to 5: DS21Q55 Port 3 TSYSCLK Source (R3S0, R3S1)
The source for TSYSCLK 3 is Defined as shown in Table 4.

Bit 6 to 7: DS21Q55 Port 4 TSYSCLK Source (R4S0, R4S1)
The source for TSYSCLK 4 is Defined as shown in Table 4.

Table 4. TSYSCLKx Source Definition

RxS1, RxS0	TSYSCLK$_X$ CONNECTION
00	Drive TSYSCLK$_X$ with the 1.544MHz clock
01	Drive TSYSCLK$_X$ with the 2.048MHz clock
10	Drive TSYSCLK $_X$ with 8.192MHz clock
11	Drive TSYSCLK$_X$ with DS21Q55 Port$_X$ BPCLK

Register Name: **SYSCLKR**
Register Description: **DS21Q55 RSYSCLK Pin Setting**
Register Offset: **0x0014**

Bit #	7	6	5	4	3	2	1	0
Name	T4S1	T4S0	T3S1	T3S0	T2S1	T2S0	T1S1	T1S0
Default	0	0	0	0	0	0	0	0

Bit 0 to 1: DS21Q55 Port 1 RSYSCLK Source (T1S0, T1S1)
The source for RSYSCLK 1 is Defined as shown in Table 5.

Bit 2 to 3: DS21Q55 Port 2 RSYSCLK Source (T2S0, T2S1)
The source for RSYSCLK 2 is Defined as shown in Table 5.

Bit 4 to 5: DS21Q55 Port 3 RSYSCLK Source (T3S0, T3S1)
The source for RSYSCLK 3 is Defined as shown in Table 5.

Bit 6 to 7: DS21Q55 Port 4 RSYSCLK Source (T4S0, T4S1)
The source for RSYSCLK 4 is Defined as shown in Table 5.

Table 5. RSYSCLKx Source Definition

TxS1, TxS0	RSYSCLK$_X$ CONNECTION
00	Drive RSYSCLK$_X$ with the 1.544MHz clock
01	Drive RSYSCLK$_X$ with the 2.048MHz clock
10	Drive RSYSCLK $_X$ with 8.192MHz clock
11	Drive RSYSCLK$_X$ with DS21Q55 Port$_X$ BPCLK

Register Name: **SYNC1**
Register Description: **DS21Q55 TSYNC Pin Source**
Register Offset: **0x0015**

Bit #	7	6	5	4	3	2	1	0
Name	—	—	—	—	T4SRC	T3SRC	T2SRC	T1SRC
Default	—	—	—	—	0	0	0	0

Bit 0: DS21Q55 Port 1 TSYNC Source (T1SRC)
0 = TSYNC 1 is an output, tri-state corresponding FPGA driver pin (weak pulldown)
1 = Drive TSYNC 1 with RSYNC 1

Bit 1: DS21Q55 Port 2 TSYNC Source (T2SRC)
0 = TSYNC 2 is an output, tri-state corresponding FPGA driver pin (weak pulldown)
1 = Drive TSYNC 2 with RSYNC 2

Bit 2: DS21Q55 Port 3 TSYNC Source (T3SRC)
0 = TSYNC 3 is an output, tri-state corresponding FPGA driver pin (weak pulldown)
1 = Drive TSYNC 3 with RSYNC 3

Bit 3: DS21Q55 Port 4 TSYNC Source (T4SRC)
0 = TSYNC 4 is an output, tri-state corresponding FPGA driver pin (weak pulldown)
1 = Drive TSYNC 4 with RSYNC 4

Note: When driving TSYNCx with RSYNCx the corresponding DS21Q55 port should be configured such that TSYNCx is an input (IOCR1.1 = 0) and RSYNCx is an output (IOCR1.4 = 0).

Register Name: **SYNC2**
Register Description: **DS21Q55 TSSYNC Pin Source**
Register Offset: **0x0016**

Bit #	7	6	5	4	3	2	1	0
Name	—	—	—	—	T4SRC	T3SRC	T2SRC	T1SRC
Default	—	—	—	—	0	0	0	0

Bit 0: DS21Q55 Port 1 TSSYNC Source (T1SRC)
0 = Not using transmit-side elastic store, tri-state corresponding FPGA driver pin (weak pulldown)
1 = Drive TSSYNC 1 with RSYNC 1

Bit 1: DS21Q55 Port 2 TSSYNC Source (T2SRC)
0 = Not using transmit-side elastic store, tri-state corresponding FPGA driver pin (weak pulldown)
1 = Drive TSSYNC 2 with RSYNC 2

Bit 2: DS21Q55 Port 3 TSSYNC Source (T3SRC)
0 = Not using transmit-side elastic store, tri-state corresponding FPGA driver pin (weak pulldown)
1 = Drive TSSYNC 3 with RSYNC 3

Bit 3: DS21Q55 Port 4 TSSYNC Source (T4Source)
0 = Not using transmit-side elastic store, tri-state corresponding FPGA driver pin (weak pulldown)
1 = Drive TSSYNC 4 with RSYNC 4

Note: When driving TSSYNCx with RSYNCx the corresponding DS21Q55 port should be configured such that RSYNCx is an output (IOCR1.4 = 0).

Register Name: **SYNC3**
Register Description: **DS21Q55 RSYNC Pin Setting**
Register Offset: **0x0017**

Bit #	7	6	5	4	3	2	1	0
Name	RSOR1	RSOR0	—	—	R4IO	R3IO	R2IO	R1IO
Default	0	0	—	—	0	0	0	0

Bit 0: DS21Q55 Port 1 RSYNC Setting (R1IO)
0 = RSYNC 1 is an output, tri-state corresponding FPGA driver pin (weak pulldown)
1 = Drive RSYNC 1 with $RSYNC_X$ as shown in Table 6

Bit 1: DS21Q55 Port 2 RSYNC Setting (R2IO)
0 = RSYNC 2 is an output, tri-state corresponding FPGA driver pin (weak pulldown)
1 = Drive RSYNC 2 with $RSYNC_X$ as shown in Table 6

Bit 2: DS21Q55 Port 3 RSYNC Setting (R3IO)
0 = RSYNC 3 is an output, tri-state corresponding FPGA driver pin (weak pulldown)
1 = Drive RSYNC 4 with $RSYNC_X$ as shown in Table 6

Bit 3: DS21Q55 Port 4 RSYNC Setting (R4IO)
0 = RSYNC 4 is an output, tri-state corresponding FPGA driver pin (weak pulldown)
1 = Drive RSYNC 4 with $RSYNC_X$ as shown in Table 6

Note: When driving RSYNCy with RSYNCx the corresponding DS21Q55 port should be configured such that RSYNCx is an output (IOCR1.4 = 0) and RSYNCy is an input (IOCR1.4 = 1).

Table 6. RSYNCx Function Definition

RSOR1, RSOR0	MASTER RSYNC DESIGNATION
00	RSYNC 1 is used to drive other RSYNC pins (providing R_XIO = 1)
01	RSYNC 2 is used to drive other RSYNC pins (providing R_XIO = 1)
10	RSYNC 3 is used to drive other RSYNC pins (providing R_XIO = 1)
11	RSYNC 4 is used to drive other RSYNC pins (providing R_XIO = 1)

Register Name: **TSERS**
Register Description: **DS21Q55 TSER Pin Source**
Register Offset: **0x0018**

Bit #	7	6	5	4	3	2	1	0
Name	T4S1	T4S0	T3S1	T3S0	T2S1	T2S0	T1S1	T1S0
Default	0	0	0	0	0	0	0	0

Bit 0 to 1: DS21Q55 Port 1 TSER Source (T1S0, T1S1)
The source for TSER 1 is Defined as shown in Table 7.

Bit 2 to 3: DS21Q55 Port 2 TSER Source (T2S0, T2S1)
The source for TSER 2 is Defined as shown in Table 7.

Bit 4 to 5: DS21Q55 Port 3 TSER Source (T3S0, T3S1)
The source for TSER 3 is Defined as shown in Table 7.

Bit 6 to 7: DS21Q55 Port 4 TSER Source (T4S0, T4S1)
The source for TSER 4 is Defined as shown in Table 7.

Table 7. TSERx Source Definition

TxS1, TxS0	$TSER_X$ CONNECTION
00	Tri-state $TSER_X$ (weak pulldown)
01	Drive $TSER_X$ with $RSER_X$
10	Drive $TSER_X$ with PCM_TXD bus (DK2000 only)
11	N/A

Register Name: **PRSER**
Register Description: **PCM RSER Source**
Register Offset: **0x0019**

Bit #	7	6	5	4	3	2	1	0
Name	—	—	—	—	R1EN	R1EN	R1EN	R1EN
Default	—	—	—	—	0	0	0	0

Bit 0 to 1: PCM RSER Source (R1EN)
0 = Do not drive DS21Q55 Port 1 RSER onto PCM_RSER
1 = Logically OR DS21Q55 Port 1 RSER with selected other RSER pins and drive onto PCM_RSER

Bit 2 to 3: DS21Q55 Port 2 TSER Source (T2S0, T2S1)
0 = Do not drive DS21Q55 Port 2 RSER onto PCM_RSER
1 = Logically OR DS21Q55 Port 2 RSER with selected other RSER pins and drive onto PCM_RSER

Bit 4 to 5: DS21Q55 Port 3 TSER Source (T3S0, T3S1)
0 = Do not drive DS21Q55 Port 3 RSER onto PCM_RSER
1 = Logically OR DS21Q55 Port 3 RSER with selected other RSER pins and drive onto PCM_RSER

Bit 6 to 7: DS21Q55 Port 4 TSER Source (T4S0, T4S1)
0 = Do not drive DS21Q55 Port 4 RSER onto PCM_RSER
1 = Logically OR DS21Q55 Port 4 RSER with selected other RSER pins and drive onto PCM_RSER

Note: PRSER register is for use with the DK2000 only.

Register Name: **PSYNC**
Register Description: **PCM RSYNC/TSYNC Source**
Register Offset: **0x001A**

Bit #	7	6	5	4	3	2	1	0
Name	—	—	T2SR	T1SR	—	—	R2SR	R1SR
Default	—	—	0	0	—	—	0	0

Bit 0 to 1: PCM_RSYNC Source

R2SR, R1SR	PCM_RSYNC Source
00	PCM_RSYNC is driven by DS21Q55 port 1 RSYNC.
01	PCM_RSYNC is driven by DS21Q55 port 2 RSYNC.
10	PCM_RSYNC is driven by DS21Q55 port 3 RSYNC.
11	PCM_RSYNC is driven by DS21Q55 port 4 RSYNC.

Bit 4 to 5: PCM_TSYNC Source

T2SR, T1SR	PCM_TSYNC Source
00	PCM_TSYNC is driven by DS21Q55 port 1 TSYNC.
01	PCM_TSYNC is driven by DS21Q55 port 2 TSYNC.
10	PCM_TSYNC is driven by DS21Q55 port 3 TSYNC.
11	PCM_TSYNC is driven by DS21Q55 port 4 TSYNC.

Note: PSYNC register is for use with the DK2000 only.

Register Name: **PCLK**
Register Description: **PCM RCLK/TCLK Source**
Register Offset: **0x001B**

Bit #	7	6	5	4	3	2	1	0
Name	—	TCM	T2SR	T1SR	—	RCM	R2SR	R1SR
Default	—	0	0	0	—	0	0	0

Bit 0 to 2: PCM_RCLK Source

RCM, R2SR, R1SR	PCM_RCLK Source
000	PCM_RCLK is driven by DS21Q55 port 1 RCLK.
001	PCM_RCLK is driven by DS21Q55 port 2 RCLK.
010	PCM_RCLK is driven by DS21Q55 port 3 RCLK.
011	PCM_RCLK is driven by DS21Q55 port 4 RCLK.
100	PCM_RCLK is driven by DS21Q55 port 1 BPCLK.
101	PCM_RCLK is driven by DS21Q55 port 2 BPCLK.
110	PCM_RCLK is driven by DS21Q55 port 3 BPCLK.
111	PCM_RCLK is driven by DS21Q55 port 4 BPCLK.

Bit 4 to 5: PCM_TCLK Source

TCM, T2SR, T1SR	PCM_TCLK Source
000	PCM_TCLK is driven by source used for DS21Q55 port 1 TCLK.
001	PCM_TCLK is driven by source used for DS21Q55 port 2 TCLK.
010	PCM_TCLK is driven by source used for DS21Q55 port 3 TCLK.
011	PCM_TCLK is driven by source used for DS21Q55 port 4 TCLK.
100	PCM_TCLK is driven by DS21Q55 port 1 BPCLK.
101	PCM_TCLK is driven by DS21Q55 port 2 BPCLK.
110	PCM_TCLK is driven by DS21Q55 port 3 BPCLK.
111	PCM_TCLK is driven by DS21Q55 port 4 BPCLK.

Note: PCLK register is for use with the DK2000 only.

FPGA CONTROL EXAMPLES

SCENARIO #1: DS21Q55 TO/FROM DK2000

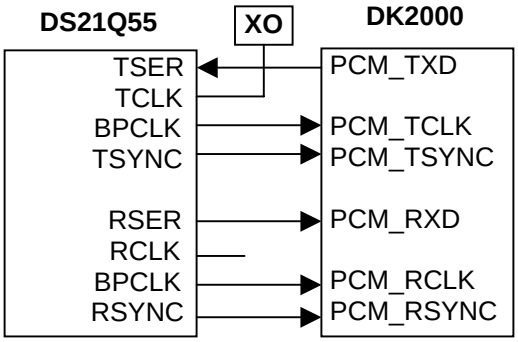

Table 8. FPGA Configuration for Scenario #1 (Port 1, T1 Mode)

REGISTER	SETTING	FUNCTION
MCSR	0X01	Drive DS21Q55 ports 1 and 3 MCLK with 2.048MHz
TCSR	0X00	Drive TCLK with 1.544MHz
SYSCLKT	0X00	Drive TSYSCLK with 1.544MHz
SYSCLKR	0X00	Drive RSYSCLK with 1.544MHz
SYNC1	0X00	Tri-state FPGA driver pin for DS21Q55 TSYNC1
SYNC2	0X01	Drive TSSYNC1 with RSYNC1
SYNC3	0X00	Tri-state FPGA driver pin for DS21Q55 RSYNC
TSERS	0X02	Drive DS21Q55 TSER1 with data from PCM bus
PRSER	0X01	Drive DS21Q55 RSER1 onto PCM bus
PSYNC	0X00	PCM RSYNC and PCM TSYNC are provided by DS21Q55 port 1 RSYNC and TSYNC (respectively)
PCLK	0X44	PCM RCLK and TCLK are driven by port 1 BPCLK

SCENARIO #2: EXTERNAL REMOTE LOOPBACK
(FULL BANDWIDTH, NOT JUST PAYLOAD)

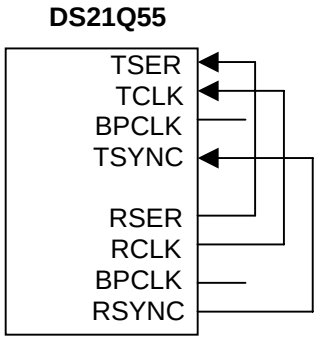

Table 9. FPGA Configuration for Scenario #2 (Port 1, T1 Mode)

REGISTER	SETTING	FUNCTION
MCSR	0X01	Drive DS21Q55 ports 1 and 3 MCLK with 2.048MHz
TCSR	0X02	Drive TCLK1 with RCLK1
SYSCLKT	0X00	Drive TSYSCLK with 1.544MHz
SYSCLKR	0X00	Drive RSYSCLK with 1.544MHz
SYNC1	0X01	Drive TSYNC1 with RSYNC1
SYNC2	0X01	Drive TSSYNC1 with RSYNC1
SYNC3	0X00	Tri-state FPGA driver pin for DS21Q55 RSYNC
TSERS	0X01	Drive DS21Q55 TSER1 with data from RSER1
PRSER	N/A	Unused
PSYNC	N/A	Unused
PCLK	N/A	Unused

Table 10. DS21Q55 Partial Configuration for Scenario #2 (Port 1, T1 Mode)

REGISTER	SETTING	FUNCTION
IOCR1	TSIO = 0; RSIO = 0	TSYNc is an input, RSYNC is an output
ESCR	TESE = 0; RESE = 0	Bypass Rx and Tx elastic stores
CCR1	TCSS1 = 0; TCSS2 = 0	TCLK is driven by TCLK pin

DS21Q55 INFORMATION

For more information about the DS21Q55, please consult the DS21Q55 data sheet available on our website at www.maxm-ic.com/DS21Q55. Software downloads are also available for this demo kit.

DS21Q55DK INFORMATION

For more information about the DS21Q55DK, including software downloads, please consult the DS21Q55DK data sheet available on our website at www.maxim-ic.com/telecom.

TECHNICAL SUPPORT

For additional technical support, please e-mail your questions to telecom.support@dalsemi.com.

SCHEMATICS

The DS21Q55DK schematics are featured in the following pages.

DOCUMENT REVISION HISTORY

REVISION DATE	DESCRIPTION
121903	Initial DS21Q55DK data sheet release.
012506	Changed part number for CH1 in *Component List* from “TX1473” to “T8132.”
110106	Updated schematics.

Maxim/Dallas Semiconductor cannot assume responsibility for use of any circuitry other than circuitry entirely embodied in a Maxim/Dallas Semiconductor product. No circuit patent licenses are implied. Maxim/Dallas Semiconductor reserves the right to change the circuitry and specifications without notice at any time.

Maxim Integrated Products, 120 San Gabriel Drive, Sunnyvale, CA 94086 408-737-7600

© 2006 Maxim Integrated Products

The Maxim logo is a registered trademark of Maxim Integrated Products, Inc. The Dallas logo is a registered trademark of Dallas Semiconductor.

DS21Q55 DESIGN KIT

CONTENTS

1. COVER PAGE
2. DS21Q55 CONTROL AND BACKPLANE
3. PORT 1 AND 2 TX / RX SYSTEM SIDE
4. PORT 3 AND 4 TX / RX SYSTEM SIDE
5. PORT 1 TX / RX ANALOG PATHS
6. PORT 2 TX / RX ANALOG PATHS
7. PORT 3 TX / RX ANALOG PATHS
8. PORT 4 TX / RX ANALOG PATHS
9. TIM ADDRESS DATA BUS CONNECTION
10. FPGA CROSS CONNECT FOR RX / TX SIGNALS
11. FPGA AND CONFIG PROM CONTROL
12. FPGA CLOCK AND DATABUS
13. SUPPLY DECOUPLING
14. SIGNAL CROSS-REFERENCE
15. COMPONENT CROSS-REFERENCE

REVISIONS:

A1: 3/7/2003 - REPLACED THE SYMBOL XC2S50E_U WITH SYMBOL XC2S50_U.

TITLE: DS21Q55DK02A1	DATE: 2/24/03
ENGINEER: STEVE SCULLY	PAGE: 1 /15

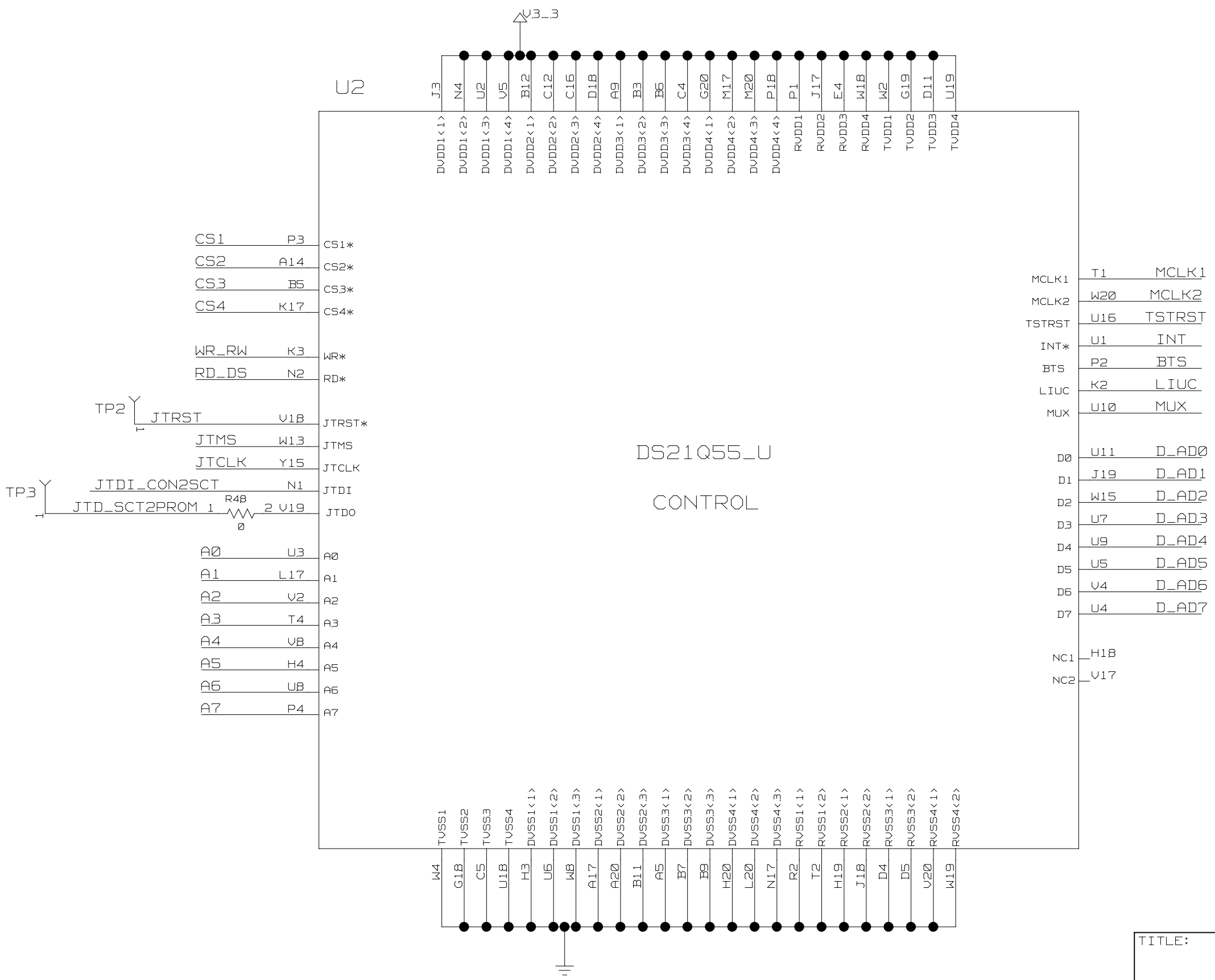

TITLE: DS21Q55DK02A1	DATE: 2/24/03
ENGINEER: STEVE SCULLY	PAGE: 2 /15

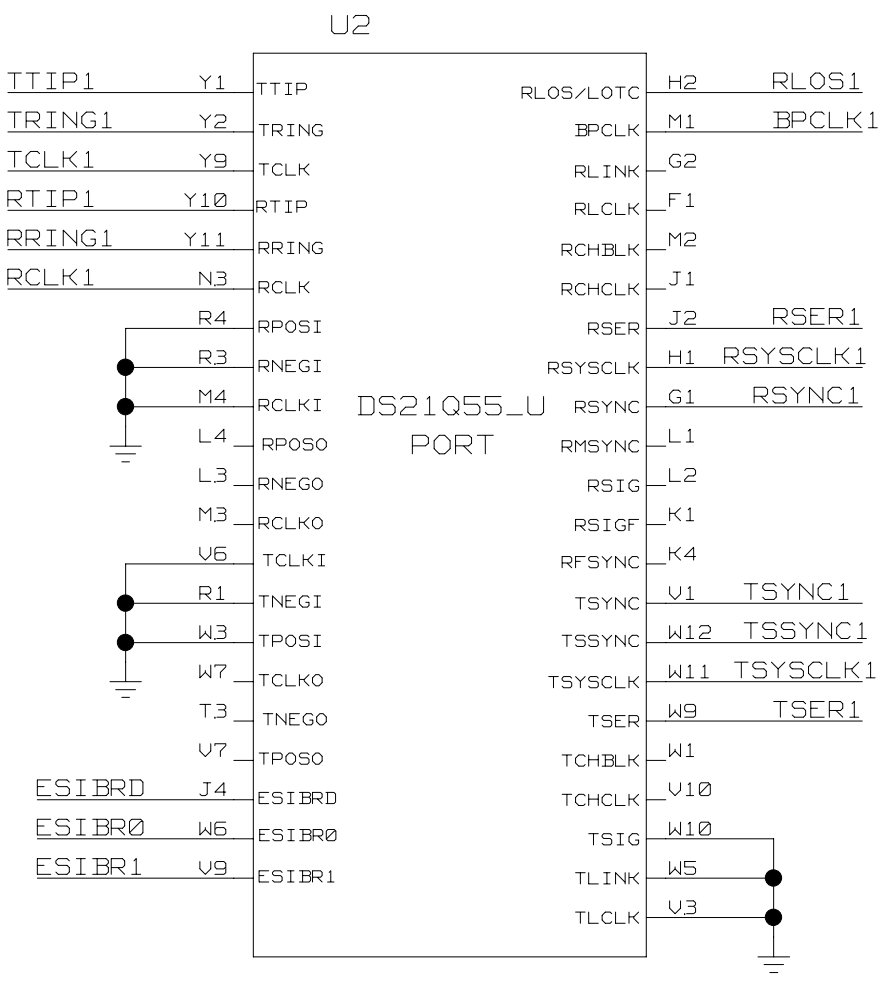

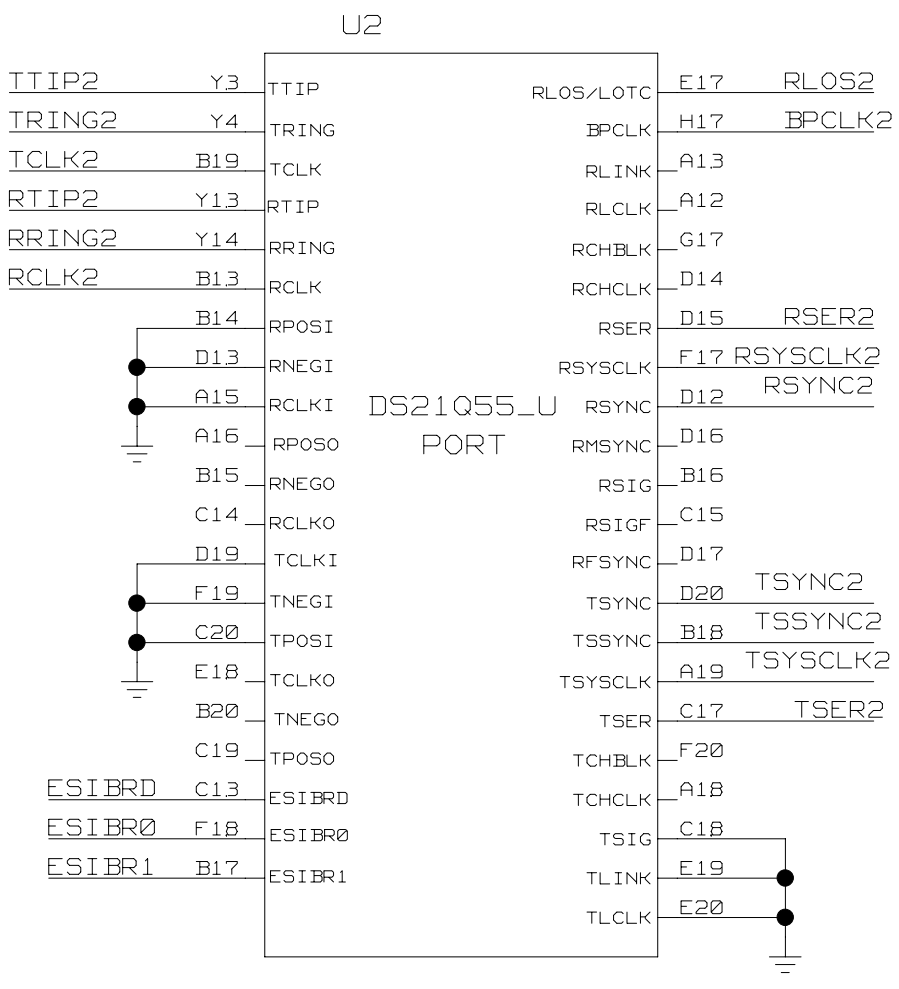

TITLE: DS21Q55DK02A1	DATE: 2/24/03
ENGINEER: STEVE SCULLY	PAGE: 3 /15

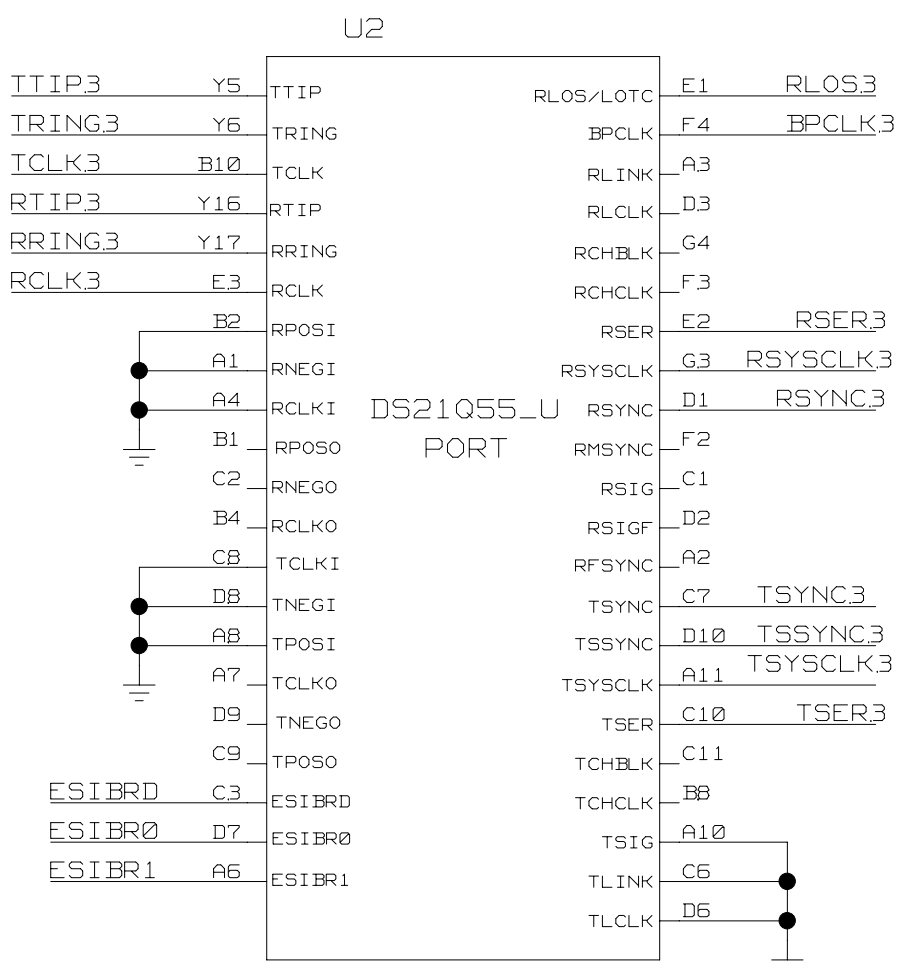

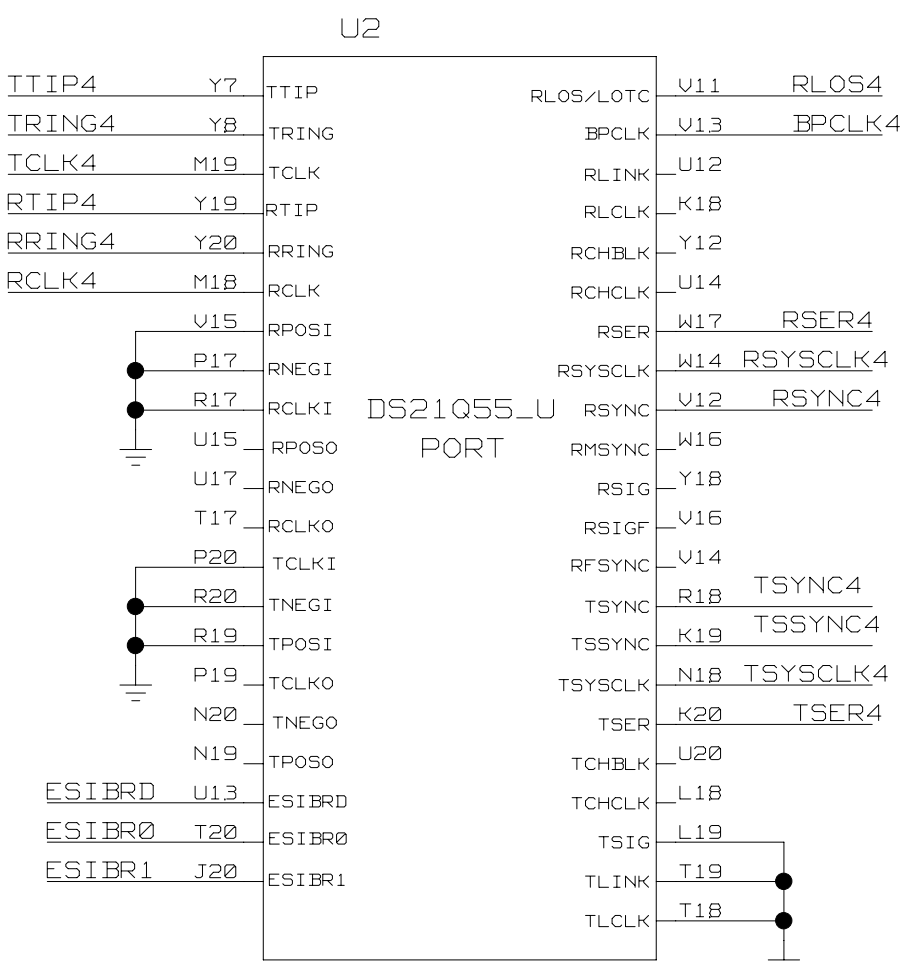

TITLE: DS21Q55DK02A1	DATE: 2/24/03
ENGINEER: STEVE SCULLY	PAGE: 4 /15

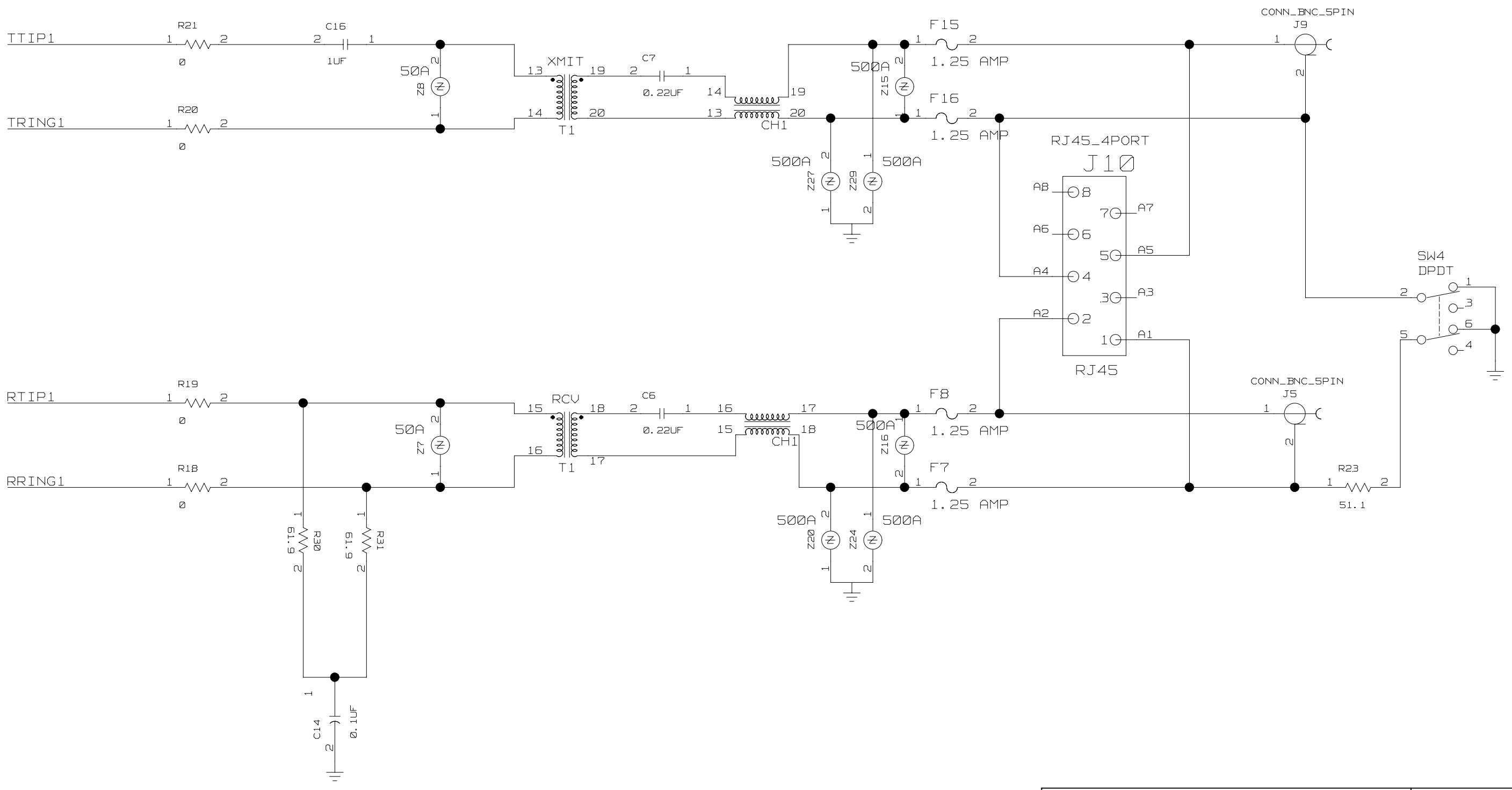

TITLE: DS21Q55DK02A1	DATE: 2/24/03
ENGINEER: STEVE SCULLY	PAGE: 5 /15

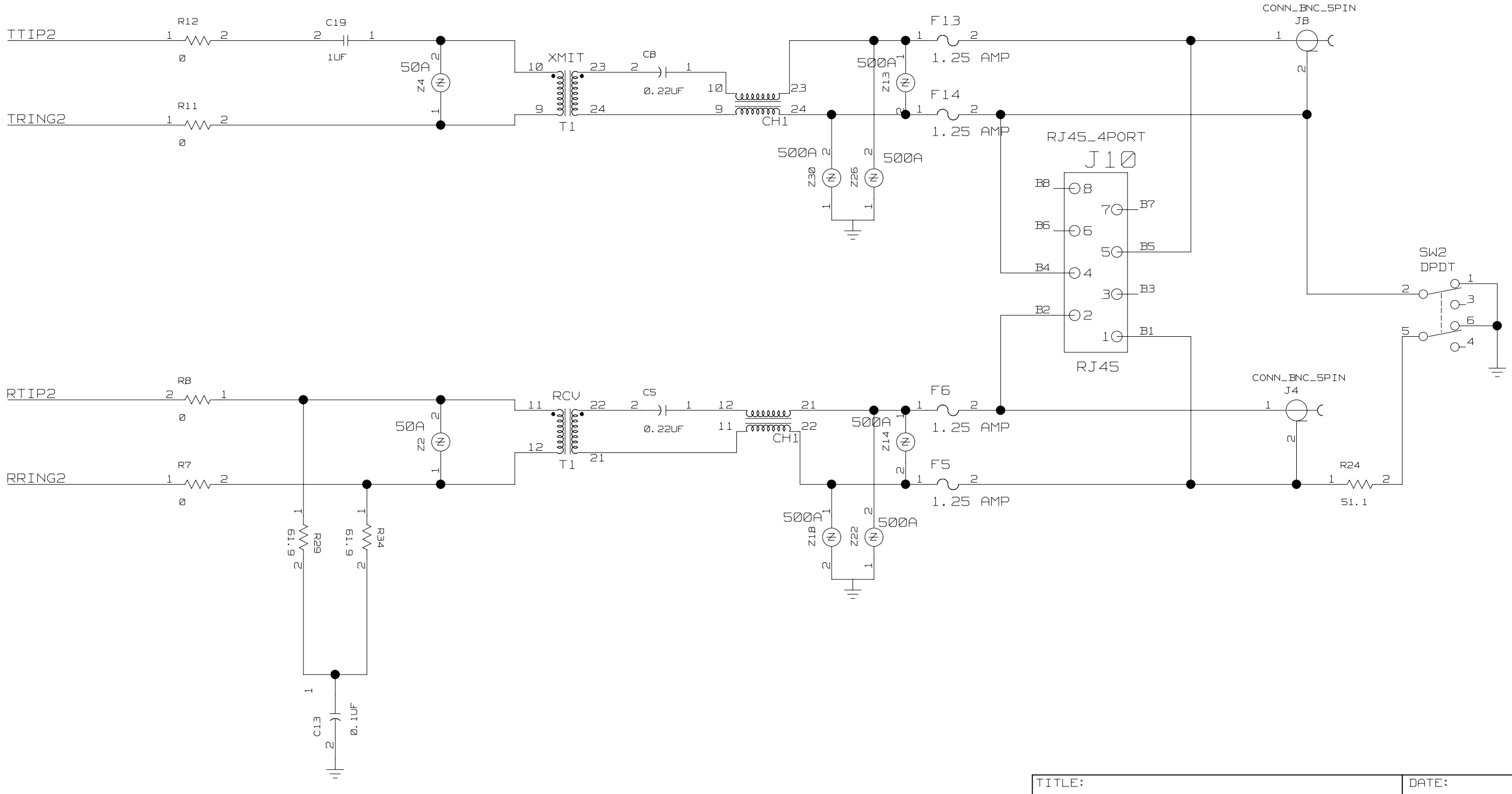

TITLE: DS21Q55DK02A1	DATE: 2/24/03
ENGINEER: STEVE SCULLY	PAGE: 6 /15

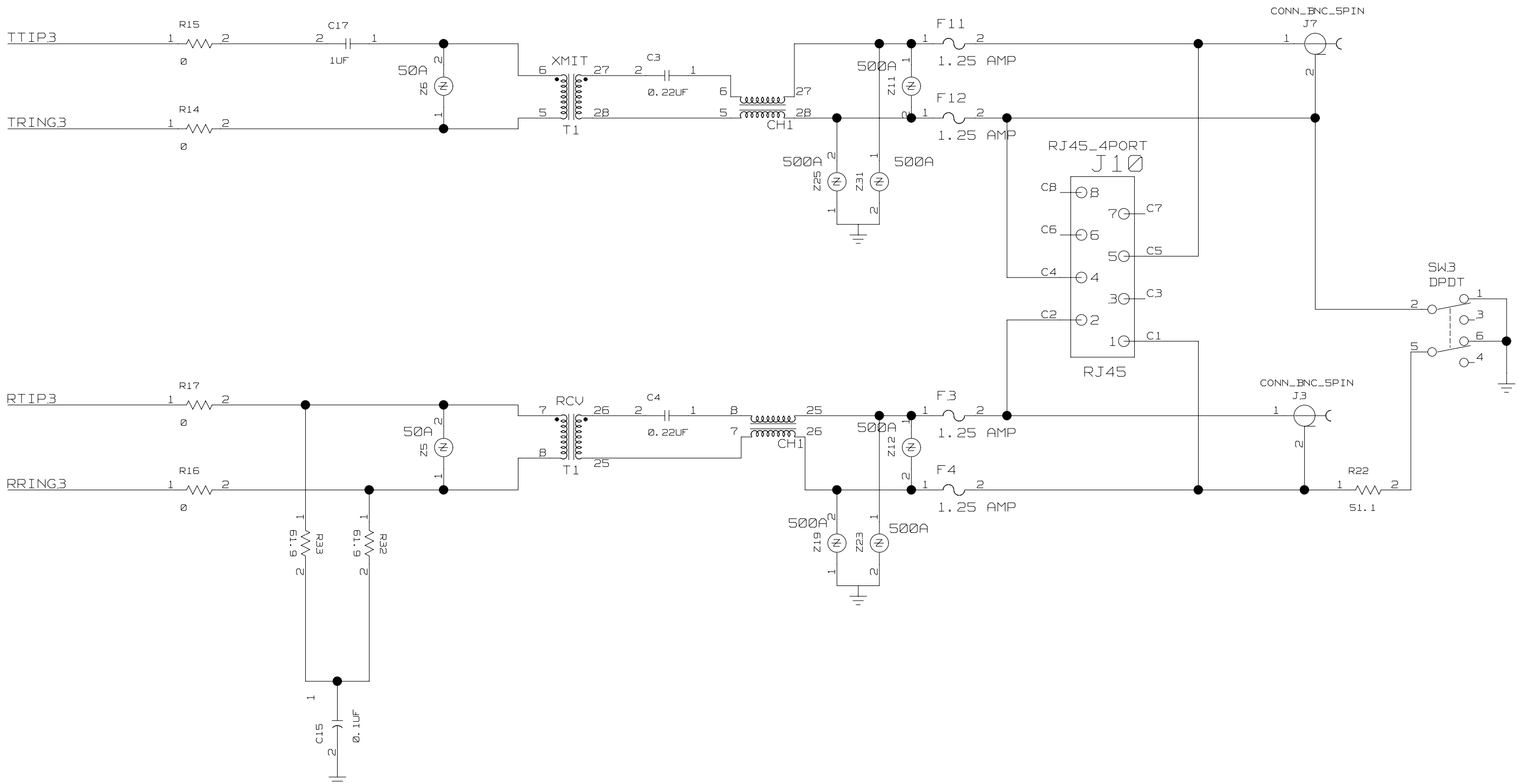

TITLE: DS21Q55DK02A1	DATE: 2/24/03
ENGINEER: STEVE SCULLY	PAGE: 7 of 15

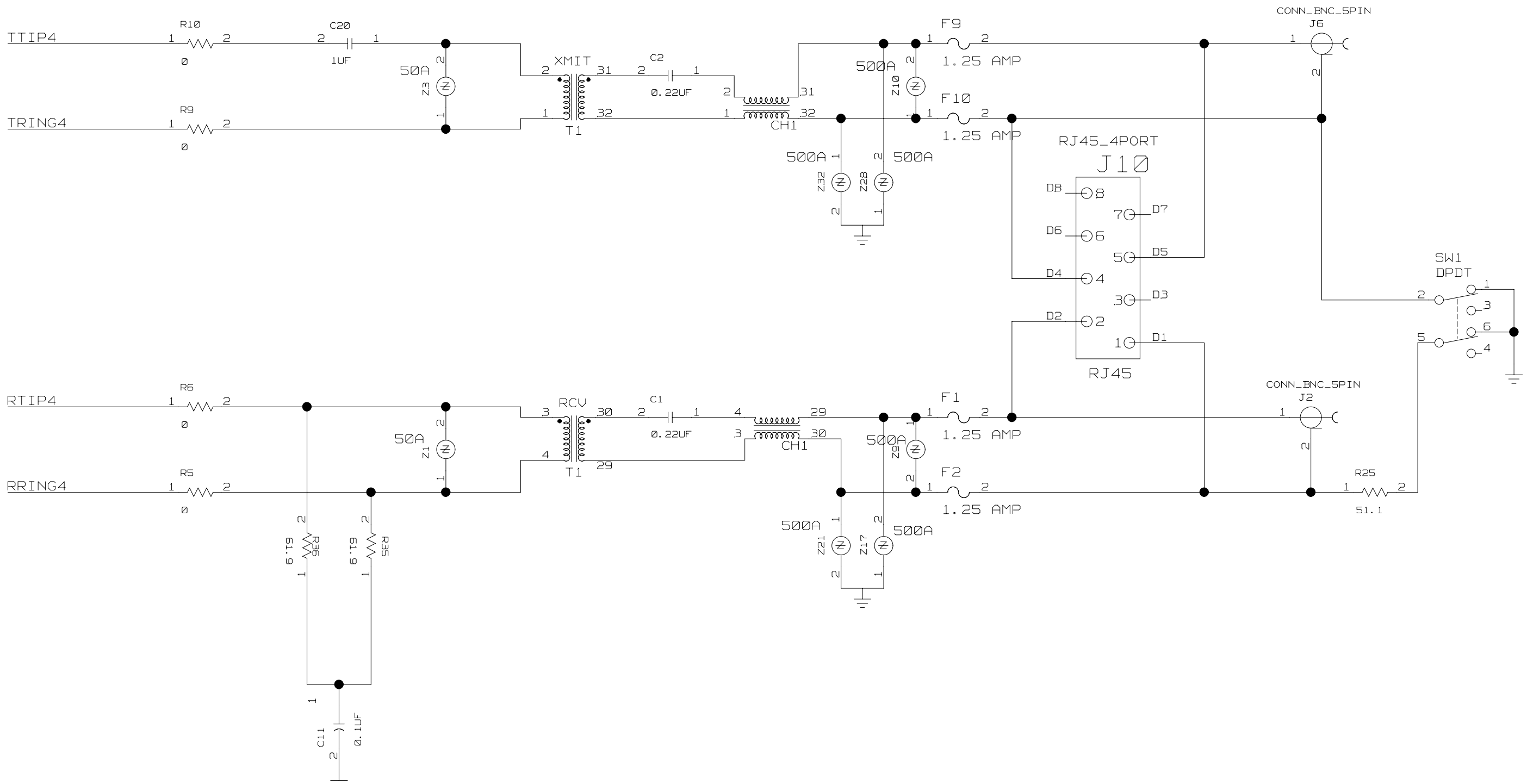

TITLE: DS21Q55DK02A1	DATE: 2/24/03
ENGINEER: STEVE SCULLY	PAGE: 8 /15

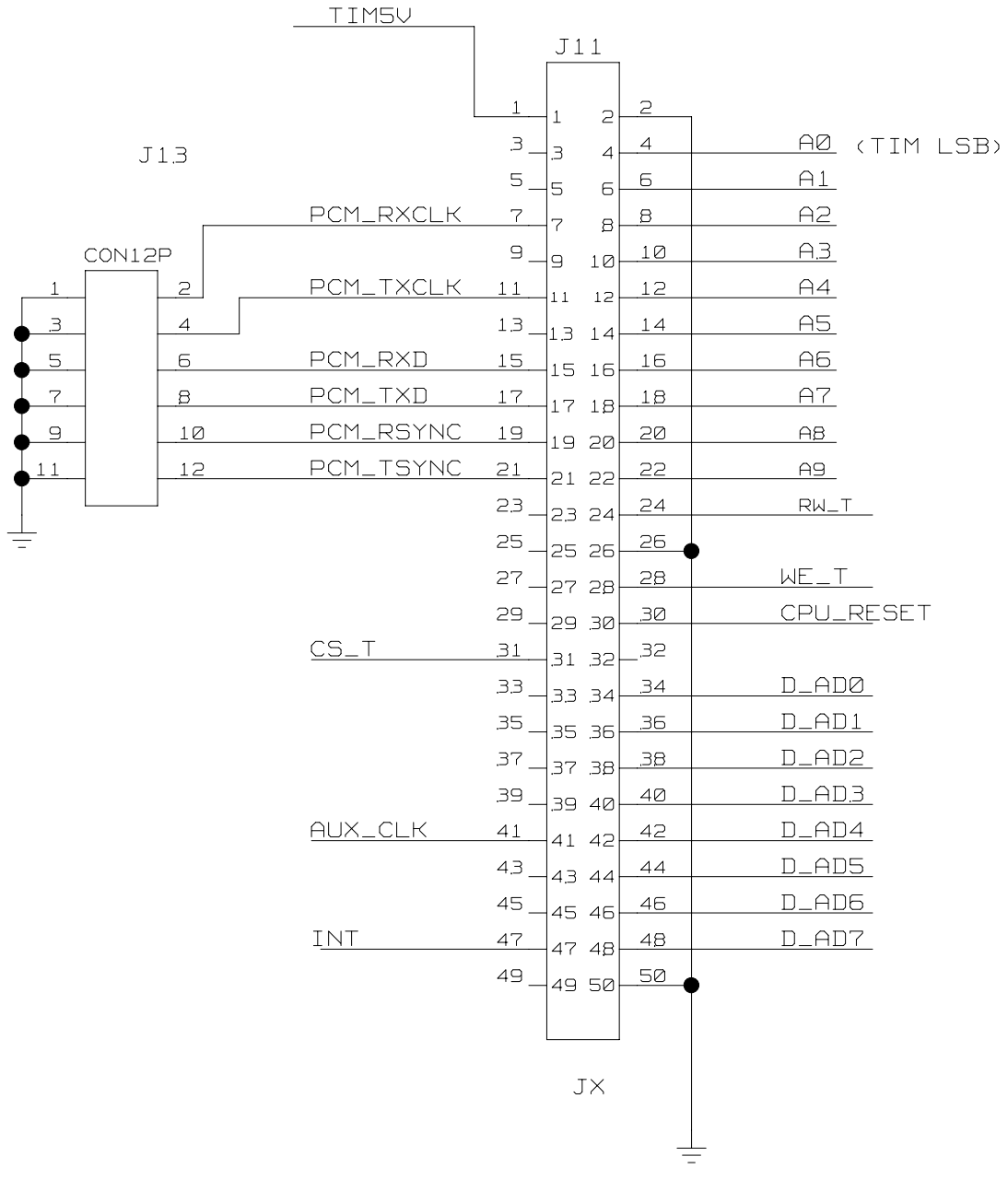

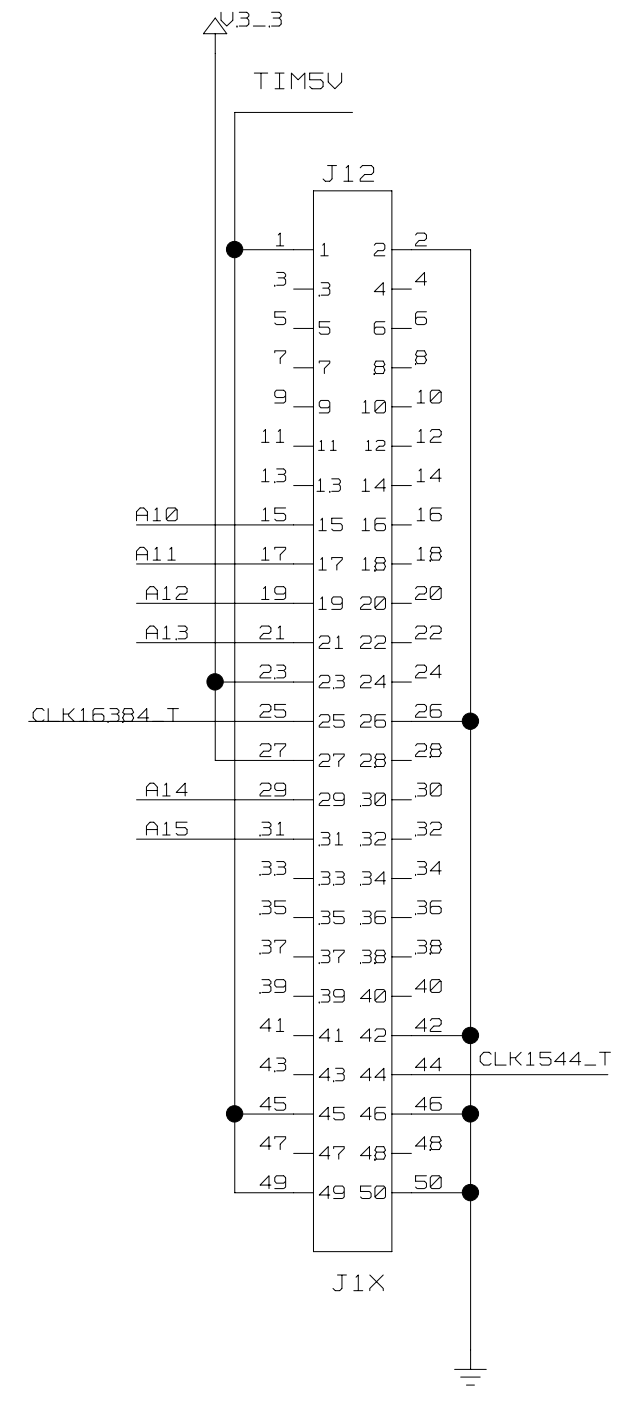

TITLE: DS21Q55DK02A1	DATE: 2/24/03
ENGINEER: STEVE SCULLY	PAGE: 9 /15

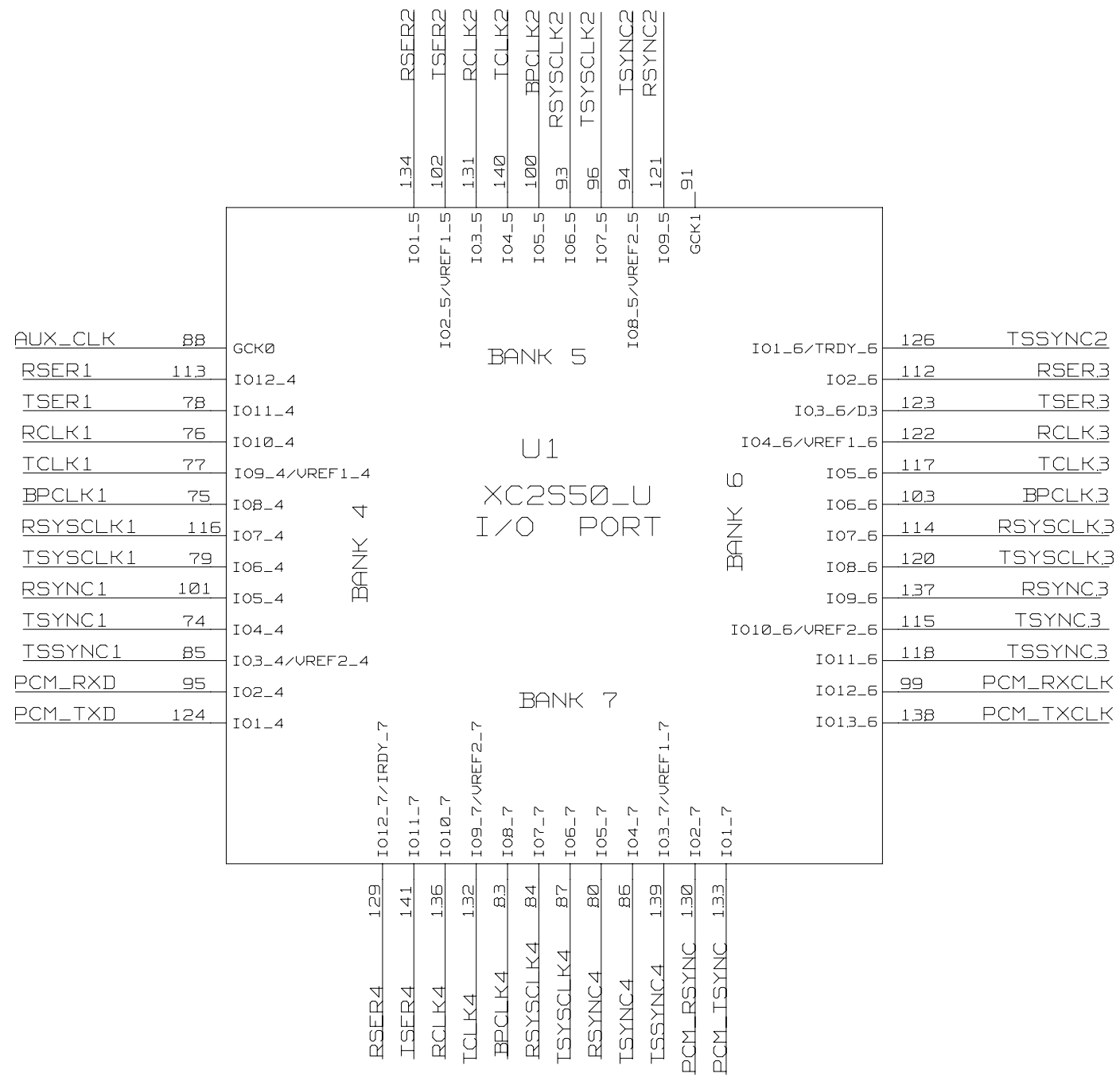

TITLE: DS21Q55DK02A1	DATE: 2/24/03
ENGINEER: STEVE SCULLY	PAGE: 10 / 15

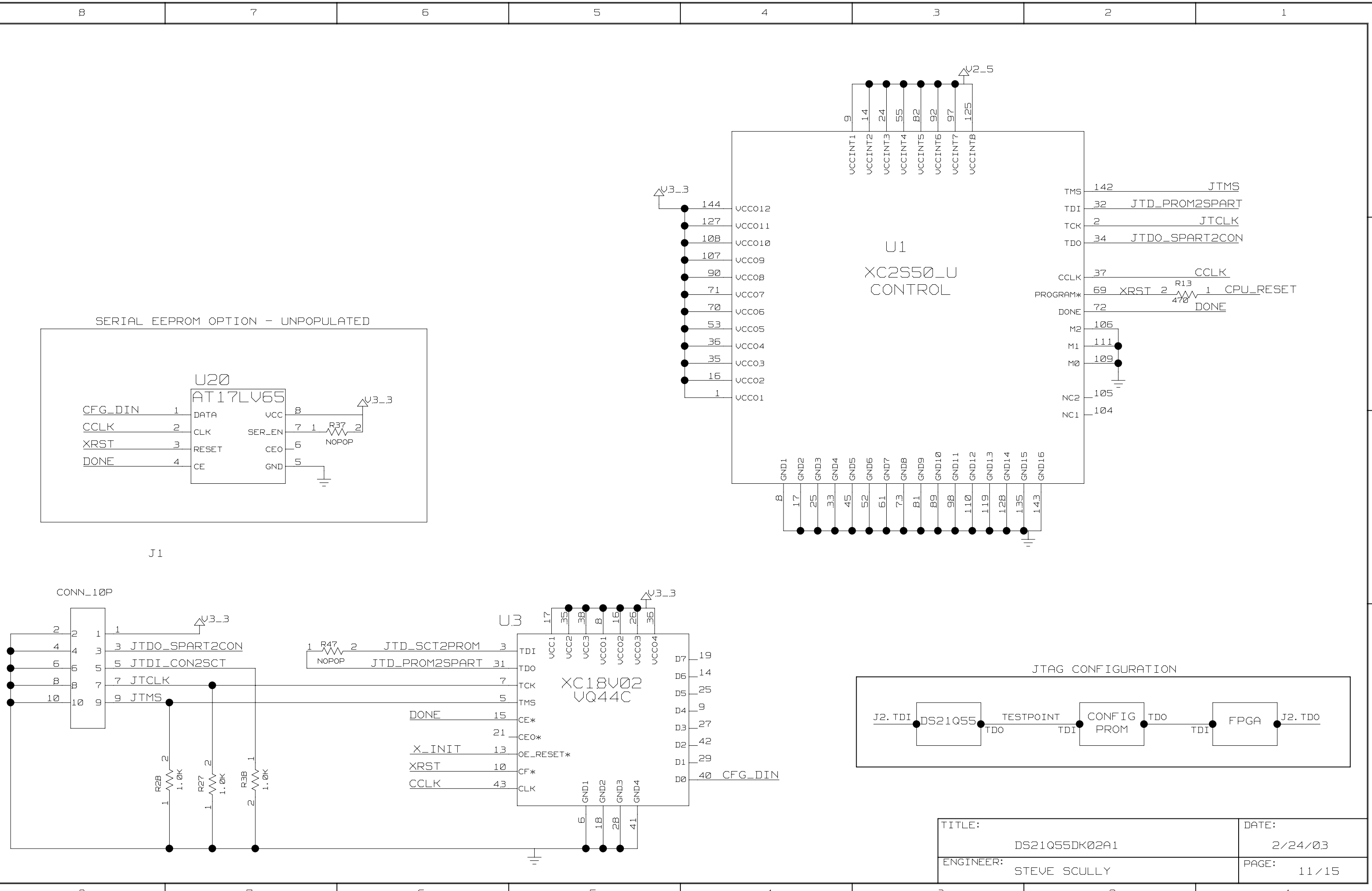

TITLE: DS21Q55DK02A1	DATE: 2/24/03
ENGINEER: STEVE SCULLY	PAGE: 11/15

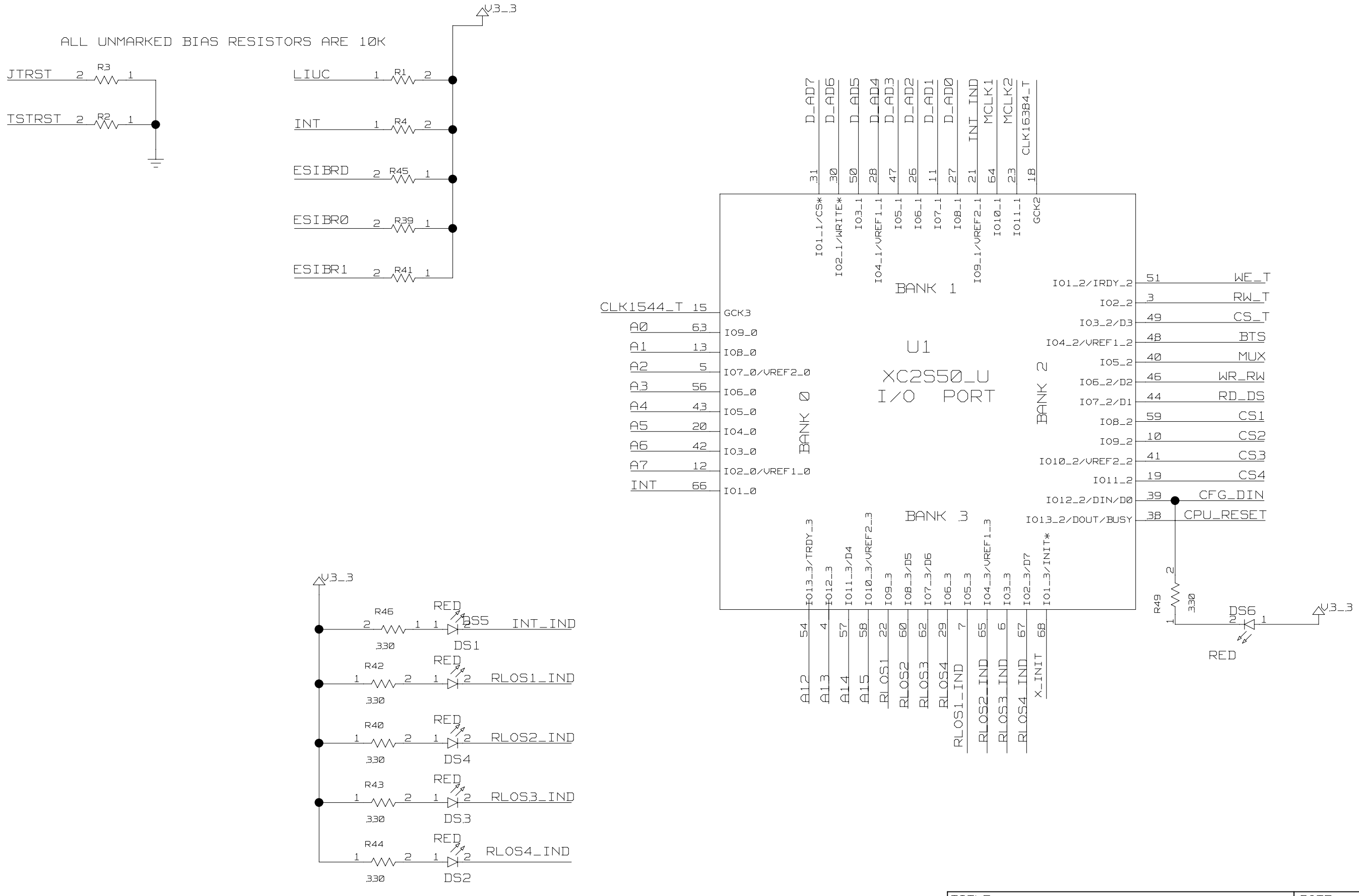

TITLE: DS21Q55DK02A1	DATE: 2/24/03
ENGINEER: STEVE SCULLY	PAGE: 12/15

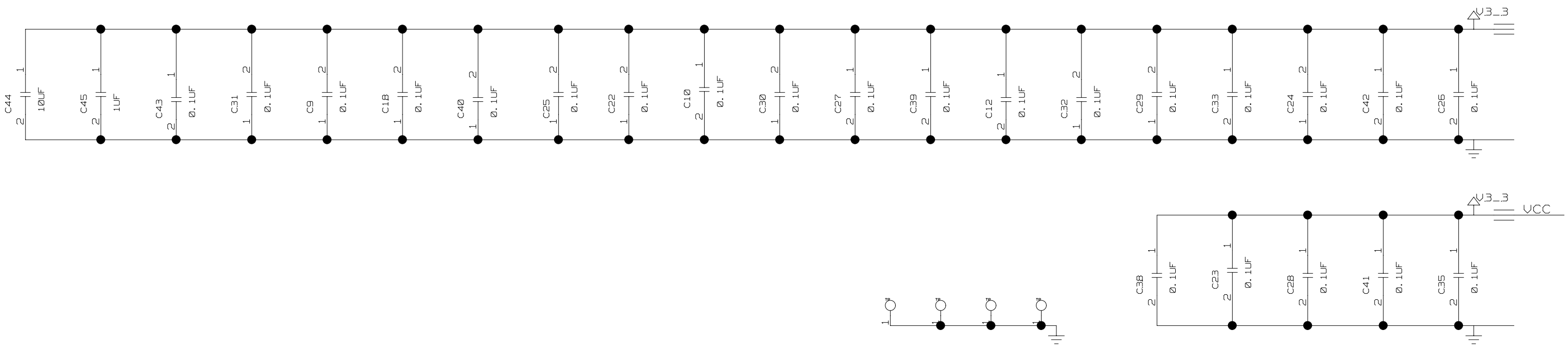

TITLE: DS21Q55DK02A1	DATE: 2/24/03
ENGINEER: STEVE SCULLY	PAGE: 13/15

*** Signal Cross-Reference for the entire design ***

A0	9D6<> 12C5<> 2B7<
A1	9C6<> 12C5<> 2B7<
A2	9C6<> 12C5<> 2B7<
A3	9C6<> 12C5<> 2B7<
A4	9C6<> 12C5<> 2B7<
A5	9C6<> 12B5<> 2A7<
A6	9C6<> 12B5<> 2A7<
A7	9C6<> 12B5<> 2A7<
A8	9C6<>
A9	9C6<>
A10	9C3<>
A11	9C3<>
A12	9C3<> 12A4<>
A13	9C3<> 12A4<>
A14	9B3<> 12A4<>
A15	9B3<> 12A3<>
AUX_CLK	9B8< 10C7<
BPCLK1	3C6> 10C6<>
BPCLK2	3C1> 10D5<>
BPCLK3	4C6> 10C3<>
BPCLK4	4C1> 10A5<>
BTS	12C1<> 2C3<
CCLK	11A6< 11B8< 11C1<
CFG_DIN	11A4> 11B8<> 12B1<>
CLK1544_T	9B2<> 12C5<
CLK16384_T	9C4<> 12D3<
CPU_RESET	9B6<> 12B1<> 11C1<
CS1	12B1<> 2C7<
CS2	12B1<> 2C7<
CS3	12B1<> 2C7<
CS4	12B1<> 2C7<
CS_T	9B8<> 12C1<>
DONE	11B8<> 11A6< 11C1<
D_AD0	2B3<> 9B6<> 12D3<>
D_AD1	2B3<> 9B6<> 12D3<>
D_AD2	2B3<> 9B6<> 12D3<>
D_AD3	2B3<> 9B6<> 12D3<>
D_AD4	2B3<> 9B6<> 12D3<>
D_AD5	2B3<> 9B6<> 12D3<>
D_AD6	2B3<> 9B6<> 12D4<>
D_AD7	2B3<> 9B6<> 12D4<>
ESIBR0	3A4<> 3A8<> 4A4<> 4A8<> 12C6<
ESIBR1	3A4<> 3A8<> 4A4<> 4A8<> 12C6<
ESIBRD	3B4<> 3B8<> 4A4<> 4A8<> 12D6<
INT	2C3> 9B8<> 12B5<> 12D6<
INT_IND	12B5<> 12D3<>
JTCLK	11A8<> 2B7< 11C1<
JTDI_CON2SCT	11A8<> 2B8<
JTDO_SPART2CON	11A7<> 11C1>
JTD_PROM2SPART	11A6<> 11D1<
JTD_SCT2PROM	2B8<> 11A6<
JTMS	11A8<> 2B7< 11D1<
JTRST	2B7<> 12D8<
LIUC	2C3< 12D6<
MCLK1	12D3<> 2C3<
MCLK2	12D3<> 2C3<
MUX	12C1<> 2B3<
PCM_RSYNC	9C8<> 10A4<>
PCM_RXCLK	9C8<> 10B3<>
PCM_RXD	9C8<> 10B7<>
PCM_TSYNC	9C8<> 10A4<>
PCM_TXCLK	9C8<> 10B3<>
PCM_TXD	9C8<> 10B7<>
RCLK1	3C8> 10C6<>
RCLK2	3C4> 10D5<>
RCLK3	4C8> 10C3<>
RCLK4	4C4> 10A5<>
RD_DS	12C1<> 2C7<
RLOS1	3C6> 12A3<>
RLOS1_IND	12A3<> 12A5<>
RLOS2	3C1> 12A3<>
RLOS2_IND	12A3<> 12A5<>
RLOS3	4C6> 12A3<>
RLOS3_IND	12A3<> 12A5<>
RLOS4	4C1> 12A3<>
RLOS4_IND	12A3<> 12A5<>
RRING1	3C8< 5B8<
RRING2	3C4< 6B8<
RRING3	4C8< 7B8<
RRING4	4C4< 8B8<
RSER1	3C6> 10C6<>
RSER2	3C1> 10D5<>
RSER3	4B6> 10C3<>
RSER4	4B1> 10A5<>
RSYNC1	3B6<> 10B6<>
RSYNC2	3B1<> 10D4<>
RSYNC3	4B6<> 10B3<>
RSYNC4	4B1<> 10A5<>
RSYSCLK1	10B6<> 3B6<
RSYSCLK2	10D5<> 3B1<
RSYSCLK3	10B3<> 4B6<
RSYSCLK4	10A5<> 4B1<
RTIP1	3C8< 5B8<
RTIP2	3C4< 6B8<
RTIP3	4C8< 7B8<
RTIP4	4C4< 8B8<
RW_T	9C6<> 12C1<>
TCLK1	10C6<> 3C8<
TCLK2	10D5<> 3C4<
TCLK3	10C3<> 4C8<
TCLK4	10A5<> 4C4<
TIM5V	9D3<> 9D8<>
TRING1	3C8> 5C8<
TRING2	3C4> 6C8<
TRING3	4C8> 7C8<
TRING4	4C4> 8C8<
TSER1	10C6<> 3B6<
TSER2	10D5<> 3B1<
TSER3	10C3<> 4B6<
TSER4	10A5<> 4B1<
TSSYNC1	10B6<> 3B6<
TSSYNC2	10C3<> 3B1<
TSSYNC3	10B3<> 4B6<
TSSYNC4	10A4<> 4B1<
TSTRST	2C3< 12D8<
TSYNC1	3B6<> 10B6<>
TSYNC2	3B1<> 10D5<>
TSYNC3	4B6<> 10B3<>
TSYNC4	4B1<> 10A5<>
TSYSCLK1	10B6<> 3B6<
TSYSCLK2	10D5<> 3B1<
TSYSCLK3	10B3<> 4B6<
TSYSCLK4	10A5<> 4B1<
TTIP1	3C8> 5C8<
TTIP2	3C4> 6C8<
TTIP3	4C8> 7C8<
TTIP4	4C4> 8C8<
WE_T	9B6<> 12C1<>
WR_RW	12C1<> 2C7<
XRST	11A6> 11B8> 11C2<
X_INIT	11A6<> 12A3<> 13D4<>

TITLE:	DATE:
ENGINEER:	PAGE:

*** Part Cross-Reference for the entire design ***

C1	CAP	8B5
C2	CAP	8C5
C3	CAP	7C5
C4	CAP	7B5
C5	CAP	6B5
C6	CAP	5B5
C7	CAP	5C5
C8	CAP	6C5
C9	CAP	13B7
C10	CAP	13B5
C11	CAP	8A6
C12	CAP	13B4
C13	CAP	6A6
C14	CAP	5A6
C15	CAP	7A6
C16	CAP	5D6
C17	CAP	7D6
C18	CAP	13B7
C19	CAP	6C6
C20	CAP	8C6
C21	CAP	13C4
C22	CAP	13B5
C23	CAP	13B2
C24	CAP	13B2
C25	CAP	13B6
C26	CAP	13B1
C27	CAP	13B4
C28	CAP	13B2
C29	CAP	13B3
C30	CAP	13B5
C31	CAP	13B7
C32	CAP	13B3
C33	CAP	13B2
C34	CAP	13D3
C35	CAP	13B1
C36	CAP	13D2
C37	CAP	13D3
C38	CAP	13B3
C39	CAP	13B4
C40	CAP	13B6
C41	CAP	13B2
C42	CAP	13B2
C43	CAP	13B8
C44	CAP	13B8
C45	CAP	13B8
CH1	CHOKE_QUADPORT_T1	5B4 5C4 6B4 6C4 7B4 7C4 8B4 8C4
DS1	LED	12B5
DS2	LED	12A5
DS3	LED	12A5
DS4	LED	12A5
DS5	LED	12B5
DS6	LED	12B2
F1	FUSE	8B4
F2	FUSE	8B4
F3	FUSE	7B4
F4	FUSE	7B4
F5	FUSE	6B3
F6	FUSE	6B3
F7	FUSE	5B4
F8	FUSE	5B4
F9	FUSE	8D4
F10	FUSE	8C4
F11	FUSE	7D4
F12	FUSE	7C4
F13	FUSE	6D3
F14	FUSE	6C3
F15	FUSE	5D4
F16	FUSE	5C4
J1	CONN_10P	11B8
J2	CONN_BNC_5PIN	8B2
J3	CONN_BNC_5PIN	7B2
J4	CONN_BNC_5PIN	6B2
J5	CONN_BNC_5PIN	5B2
J6	CONN_BNC_5PIN	8D2
J7	CONN_BNC_5PIN	7D2
J8	CONN_BNC_5PIN	6D2
J9	CONN_BNC_5PIN	5D2
J10	RJ45_8	5C3 6C3 7C3 8C3
J11	CONN_50P2	9D7
J12	CONN_50P2	9D3
J13	CON12P	9D8
R1	RES1	12D6
R2	RES1	12D7
R3	RES	12D7
R4	RES1	12D6
R5	RES	8B7
R6	RES	8B7
R7	RES	6B7
R8	RES	6B7
R9	RES	8C7
R10	RES	8D7
R11	RES	6C7
R12	RES	6D7
R13	RES	11C2
R14	RES	7C7
R15	RES	7D7
R16	RES	7B7
R17	RES	7B7
R18	RES	5B7
R19	RES	5B7
R20	RES	5C7
R21	RES	5D7
R22	RES	7B2
R23	RES	5B2
R24	RES	6B2
R25	RES	8B2
R26	RES	13D4
R27	RES1	11A7
R28	RES1	11A8
R29	RES1	6A6
R30	RES1	5A6
R31	RES1	5A6
R32	RES1	7A6
R33	RES1	7A6
R34	RES1	6A6
R35	RES1	8A6
R36	RES1	8A6
R37	RES1	11B7
R38	RES1	11A7
R39	RES	12C6
R40	RES1	12A6
R41	RES	12C6
R42	RES1	12A6
R43	RES1	12A6
R44	RES1	12A6
R45	RES	12D6
R46	RES1	12B6
R47	RES1	11A7
R48	RES	2B7
R49	RES1	12B2
SW1	SWITCH_DPDT_SLIDE_6P	8C1
SW2	SWITCH_DPDT_SLIDE_6P	6C1
SW3	SWITCH_DPDT_SLIDE_6P	7C1
SW4	SWITCH_DPDT_SLIDE_6P	5C1
T1	XFMR_QUADPORT_T1	5B5 5C5 6B5 6C5 7B5 7C5 8B5 8C5
TP1	TSTPNT_SNG	13B3
TP2	TESTPOINT	2B8
TP3	TESTPOINT	2B8
TP24	TSTPNT_SNG	13B4
TP25	TSTPNT_SNG	13B4
TP26	TSTPNT_SNG	13B4
U1	XC2S50_U	10C5 11C3 12C3
U2	DS21Q55_U	2D7 3C3 3C7 4C3 4C7
U3	XC18V02VQ44C_U	11A6
U4	MAX1792	13D4
U20	AT17LV65	11C7
Z1	SIDACTOR_2	8B6
Z2	SIDACTOR_2	6B6
Z3	SIDACTOR_2	8C6
Z4	SIDACTOR_2	6C6
Z5	SIDACTOR_2	7B6
Z6	SIDACTOR_2	7C6
Z7	SIDACTOR_2	5B6
Z8	SIDACTOR_2	5C6
Z9	SIDACTOR_2	8B4
Z10	SIDACTOR_2	8C4
Z11	SIDACTOR_2	7C4
Z12	SIDACTOR_2	7B4
Z13	SIDACTOR_2	6C4
Z14	SIDACTOR_2	6B4
Z15	SIDACTOR_2	5C4
Z16	SIDACTOR_2	5B4
Z17	SIDACTOR_2	8A4
Z18	SIDACTOR_2	6A4
Z19	SIDACTOR_2	7A4
Z20	SIDACTOR_2	5A4
Z21	SIDACTOR_2	8A4
Z22	SIDACTOR_2	6A4
Z23	SIDACTOR_2	7A4
Z24	SIDACTOR_2	5A4
Z25	SIDACTOR_2	7C4
Z26	SIDACTOR_2	6C4
Z27	SIDACTOR_2	5C4
Z28	SIDACTOR_2	8C4
Z29	SIDACTOR_2	5C4
Z30	SIDACTOR_2	6C4
Z31	SIDACTOR_2	7C4
Z32	SIDACTOR_2	8C4

TITLE:	DATE:
ENGINEER:	PAGE: