CSD25501F3 –20-V P-Channel FemtoFET™ MOSFET

1 Features

- Low On-Resistance
- Ultra-Low Q_g and Q_{gd}
- Ultra-Small Footprint
  - 0.7 mm × 0.6 mm
- Low Profile
  - 0.22-mm Max Height
- Integrated ESD Protection Diode
- Lead and Halogen Free
- RoHS Compliant

2 Applications

- Optimized for Load Switch Applications
- Battery Applications
- Handheld and Mobile Applications

3 Description

This –20-V, 64-mΩ, P-Channel FemtoFET™ MOSFET is designed and optimized to minimize the footprint in many handheld and mobile applications. This technology is capable of replacing standard small signal MOSFETs while providing a substantial reduction in footprint size. The integrated 10-kΩ clamp resistor (R_C) allows the gate voltage (V_{GS}) to be operated above the maximum internal gate oxide value of –6 V, depending on duty cycle. The gate leakage (I_{GSS}) through the diode increases as V_{GS} is increased above –6 V.

Product Summary

T_A = 25°C		TYPICAL VALUE		UNIT
V_{DS}	Drain-to-Source Voltage	–20		V
Q_g	Gate Charge Total (–4.5 V)	1.02		nC
Q_{gd}	Gate Charge Gate-to-Drain	0.09		nC
$R_{DS(on)}$	Drain-to-Source On-Resistance	V_{GS} = –1.8 V	120	mΩ
		V_{GS} = –2.5 V	86	
		V_{GS} = –4.5 V	64	
$V_{GS(th)}$	Threshold Voltage	–0.75		V

Device Information(1)

DEVICE	QTY	MEDIA	PACKAGE	SHIP
CSD25501F3	3000	7-Inch Reel	Femto 0.73-mm × 0.64-mm Land Grid Array (LGA)	Tape and Reel
CSD25501F3T	250			

(1) For all available packages, see the orderable addendum at the end of the data sheet.

Absolute Maximum Ratings

T_A = 25°C (unless otherwise stated)		VALUE	UNIT
V_{DS}	Drain-to-Source Voltage	–20	V
V_{GS}	Gate-to-Source Voltage	–20	V
I_D	Continuous Drain Current(1)	–3.6	A
I_{DM}	Pulsed Drain Current(1)(2)	–13.6	A
P_D	Power Dissipation(1)	500	mW
$V_{(ESD)}$	Human-Body Model (HBM)	4000	V
	Charged-Device Model (CDM)	2000	
T_J, T_{stg}	Operating Junction, Storage Temperature	–55 to 150	°C

(1) Typical $R_{\theta JA}$ = 255°C/W mounted on FR4 material with minimum Cu mounting area.

(2) Pulse duration ≤ 100 µs, duty cycle ≤ 1%.

Typical Part Dimensions

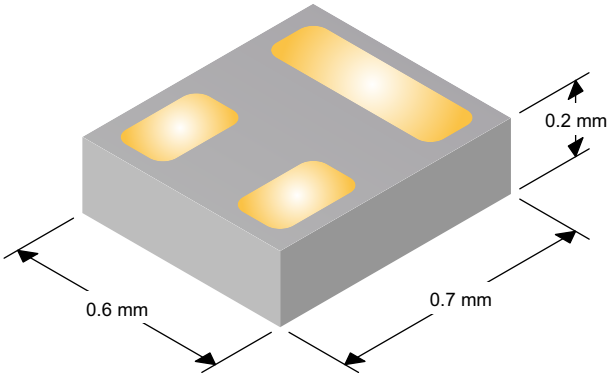

Top View

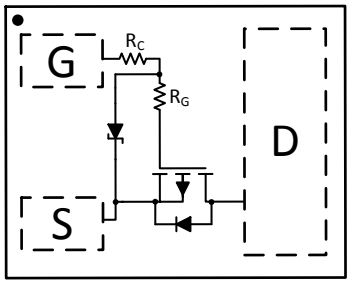

An IMPORTANT NOTICE at the end of this data sheet addresses availability, warranty, changes, use in safety-critical applications, intellectual property matters and other important disclaimers. PRODUCTION DATA.

Table of Contents

1 Features ... 1
2 Applications ... 1
3 Description ... 1
4 Revision History ... 2
5 Specifications ... 3
5.1 Electrical Characteristics ... 3
5.2 Thermal Information ... 3
5.3 Typical MOSFET Characteristics ... 4
6 Device and Documentation Support ... 7
6.1 Receiving Notification of Documentation Updates ... 7
6.2 Community Resources ... 7
6.3 Trademarks ... 7
6.4 Electrostatic Discharge Caution ... 7
6.5 Glossary ... 7
7 Mechanical, Packaging, and Orderable Information ... 8
7.1 Mechanical Dimensions ... 8

4 Revision History

Changes from Original (October 2017) to Revision A	Page
• Added mechanical dimension information and Table 1	8

Copyright © 2017–2018, Texas Instruments Incorporated

5 Specifications

5.1 Electrical Characteristics

T_A = 25°C (unless otherwise stated)

PARAMETER		TEST CONDITIONS	MIN	TYP	MAX	UNIT
STATIC CHARACTERISTICS						
BV_{DSS}	Drain-to-source voltage	V_{GS} = 0 V, I_{DS} = –250 µA	–20			V
I_{DSS}	Drain-to-source leakage current	V_{GS} = 0 V, V_{DS} = –16 V			–50	nA
I_{GSS}	Gate-to-source leakage current	V_{DS} = 0 V, V_{GS} = –6 V			–50	nA
		V_{DS} = 0 V, V_{GS} = –16 V			–1	mA
$V_{GS(th)}$	Gate-to-source threshold voltage	V_{DS} = V_{GS}, I_{DS} = –250 µA	–0.45	–0.75	–1.05	V
$R_{DS(on)}$	Drain-to-source on-resistance	V_{GS} = –1.8 V, I_{DS} = –0.1 A		120	260	mΩ
		V_{GS} = –2.5 V, I_{DS} = –0.4 A		86	125	
		V_{GS} = –4.5 V, I_{DS} = –0.4 A		64	76	
g_{fs}	Transconductance	V_{DS} = –2 V, I_{DS} = –0.4 A		3.4		S
DYNAMIC CHARACTERISTICS						
C_{iss}	Input capacitance	V_{GS} = 0 V, V_{DS} = –10 V, f = 100 kHz		295	385	pF
C_{oss}	Output capacitance			70	91	pF
C_{rss}	Reverse transfer capacitance			4.1	5.3	pF
R_G	Series gate resistance			33		Ω
R_C	Series clamp resistance			10,000		Ω
Q_g	Gate charge total (–4.5 V)	V_{DS} = –10 V, I_{DS} = –0.4 A		1.02	1.33	nC
Q_{gd}	Gate charge gate-to-drain			0.09		nC
Q_{gs}	Gate charge gate-to-source			0.45		nC
$Q_{g(th)}$	Gate charge at V_{th}			0.36		nC
Q_{oss}	Output charge	V_{DS} = –10 V, V_{GS} = 0 V		1.8		nC
$t_{d(on)}$	Turnon delay time	V_{DS} = –10 V, V_{GS} = –4.5 V, I_{DS} = –0.4 A, R_G = 0 Ω		474		ns
t_r	Rise time			428		ns
$t_{d(off)}$	Turnoff delay time			1154		ns
t_f	Fall time			945		ns
DIODE CHARACTERISTICS						
V_{SD}	Diode forward voltage	I_{SD} = –0.4 A, V_{GS} = 0 V		–0.73	–0.95	V
Q_{rr}	Reverse recovery charge	V_{DS} = –10 V, I_F = –0.4 A, di/dt = 200 A/µs		3.0		nC
t_{rr}	Reverse recovery time			7.4		ns

5.2 Thermal Information

T_A = 25°C (unless otherwise stated)

THERMAL METRIC		TYPICAL VALUES	UNIT
$R_{\theta JA}$	Junction-to-ambient thermal resistance (1)	90	°C/W
	Junction-to-ambient thermal resistance (2)	255	°C/W

(1) Device mounted on FR4 material with 1-in^2 (6.45-cm^2), 2-oz (0.071-mm) thick Cu.
(2) Device mounted on FR4 material with minimum Cu mounting area.

5.3 Typical MOSFET Characteristics

T_A = 25°C (unless otherwise stated)

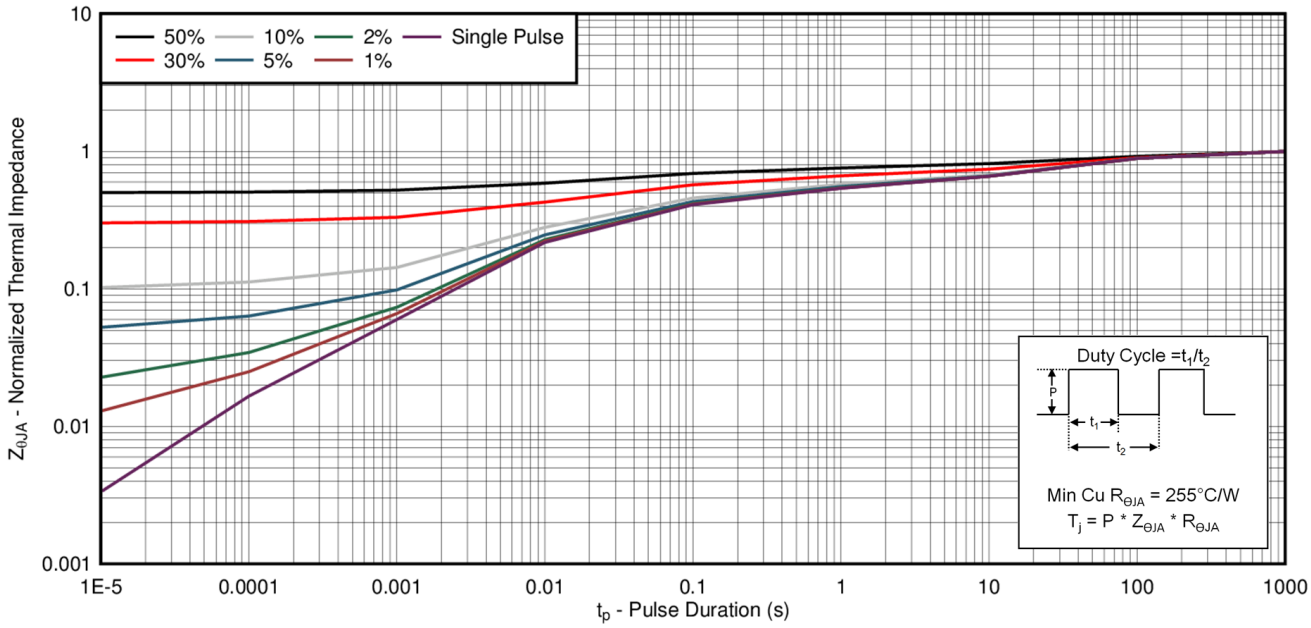

Figure 1. Transient Thermal Impedance

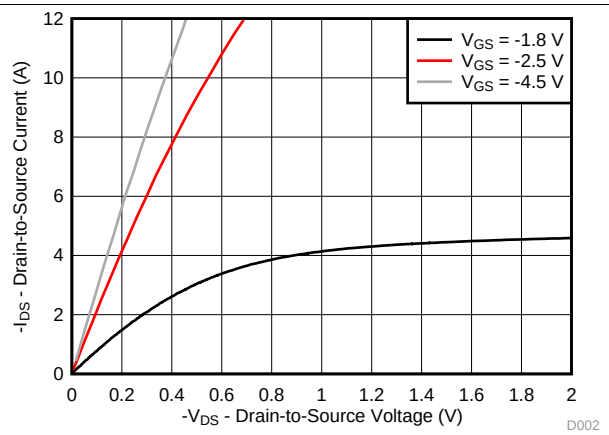

Figure 2. Saturation Characteristics

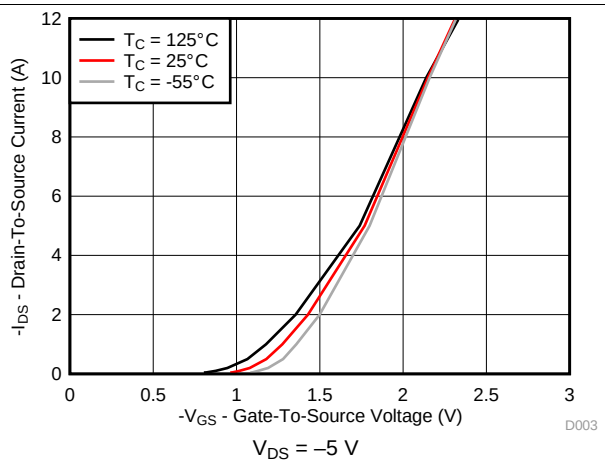

Figure 3. Transfer Characteristics

Copyright © 2017–2018, Texas Instruments Incorporated

Typical MOSFET Characteristics (continued)

T_A = 25°C (unless otherwise stated)

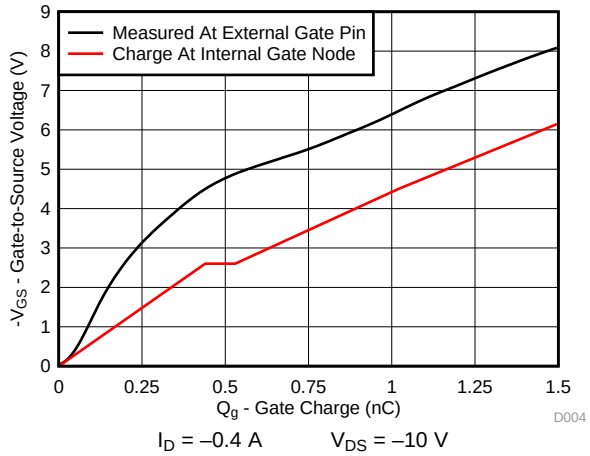

Figure 4. Gate Charge

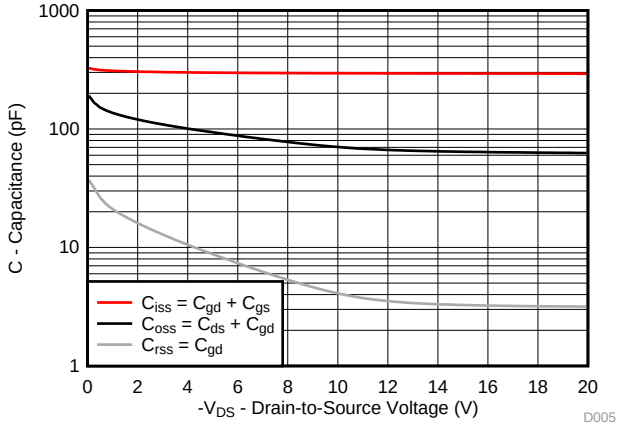

Figure 5. Capacitance

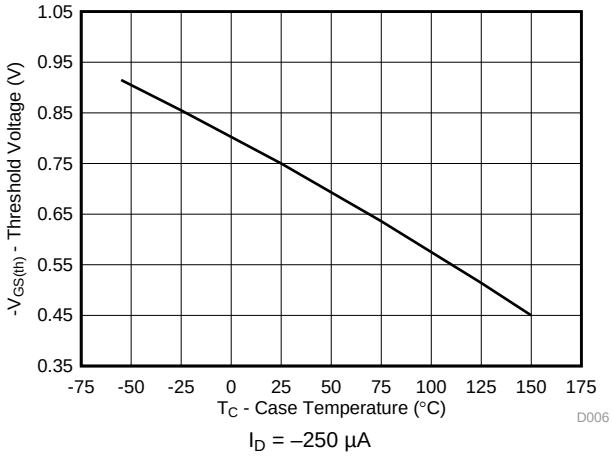

Figure 6. Threshold Voltage vs Temperature

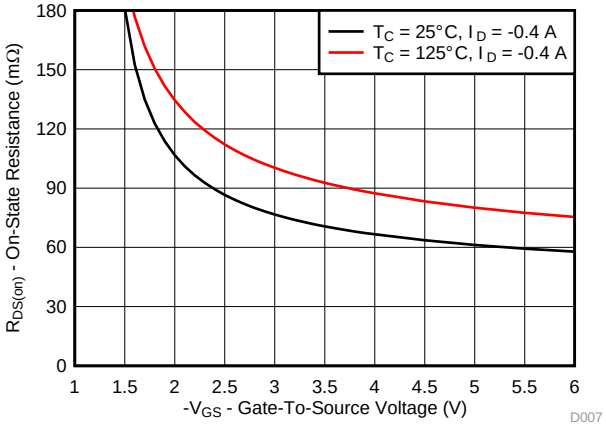

Figure 7. On-State Resistance vs Gate-to-Source Voltage

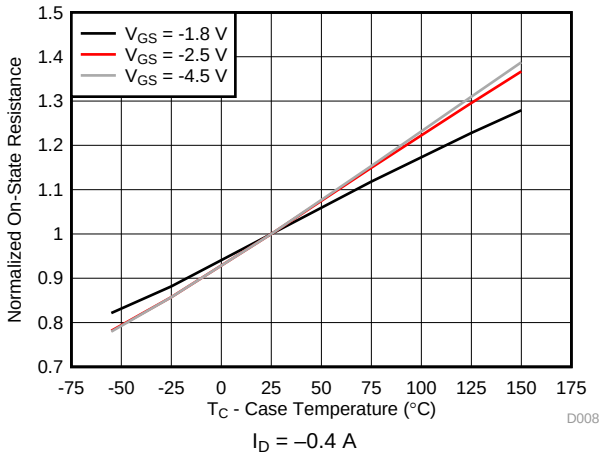

Figure 8. Normalized On-State Resistance vs Temperature

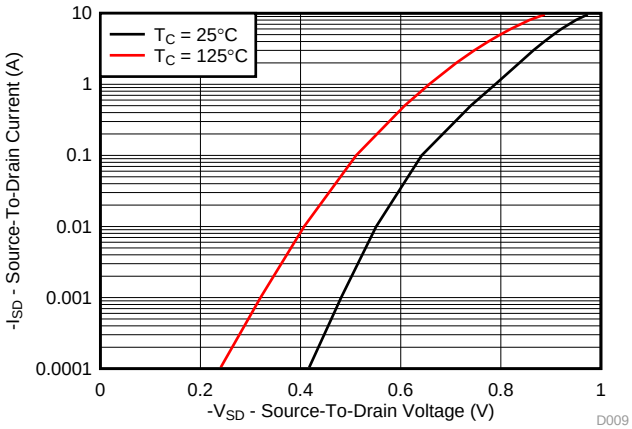

Figure 9. Typical Diode Forward Voltage

Typical MOSFET Characteristics (continued)

T_A = 25°C (unless otherwise stated)

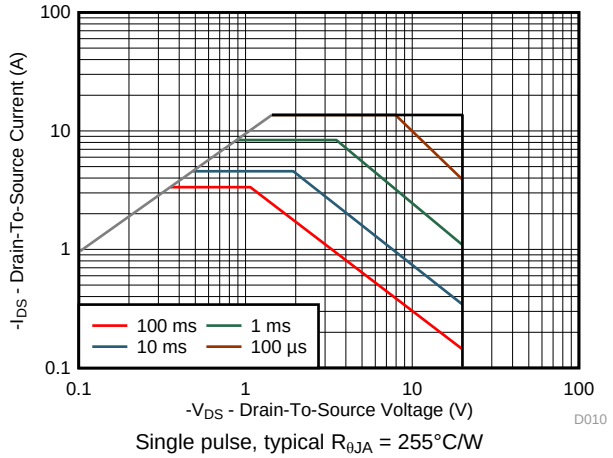

Figure 10. Maximum Safe Operating Area

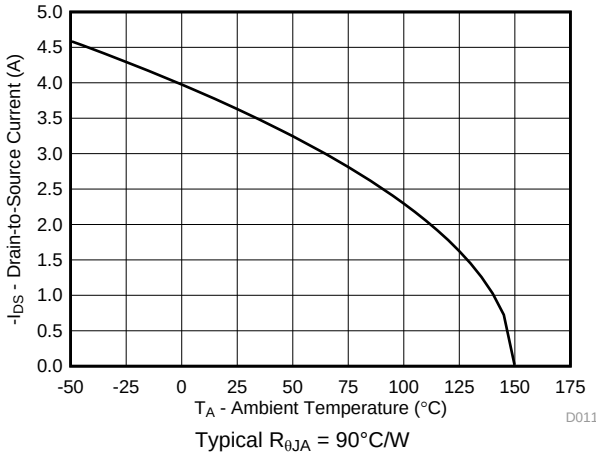

Figure 11. Maximum Drain Current vs Temperature

Copyright © 2017–2018, Texas Instruments Incorporated

6 Device and Documentation Support

6.1 Receiving Notification of Documentation Updates

To receive notification of documentation updates, navigate to the device product folder on ti.com. In the upper right corner, click on *Alert me* to register and receive a weekly digest of any product information that has changed. For change details, review the revision history included in any revised document.

6.2 Community Resources

The following links connect to TI community resources. Linked contents are provided "AS IS" by the respective contributors. They do not constitute TI specifications and do not necessarily reflect TI's views; see TI's Terms of Use.

TI E2E™ Online Community ***TI's Engineer-to-Engineer (E2E) Community.*** Created to foster collaboration among engineers. At e2e.ti.com, you can ask questions, share knowledge, explore ideas and help solve problems with fellow engineers.

Design Support ***TI's Design Support*** Quickly find helpful E2E forums along with design support tools and contact information for technical support.

6.3 Trademarks

FemtoFET, E2E are trademarks of Texas Instruments.
All other trademarks are the property of their respective owners.

6.4 Electrostatic Discharge Caution

These devices have limited built-in ESD protection. The leads should be shorted together or the device placed in conductive foam during storage or handling to prevent electrostatic damage to the MOS gates.

6.5 Glossary

SLYZ022 — *TI Glossary*.

This glossary lists and explains terms, acronyms, and definitions.

7 Mechanical, Packaging, and Orderable Information

The following pages include mechanical, packaging, and orderable information. This information is the most current data available for the designated devices. This data is subject to change without notice and revision of this document. For browser-based versions of this data sheet, refer to the left-hand navigation.

7.1 Mechanical Dimensions

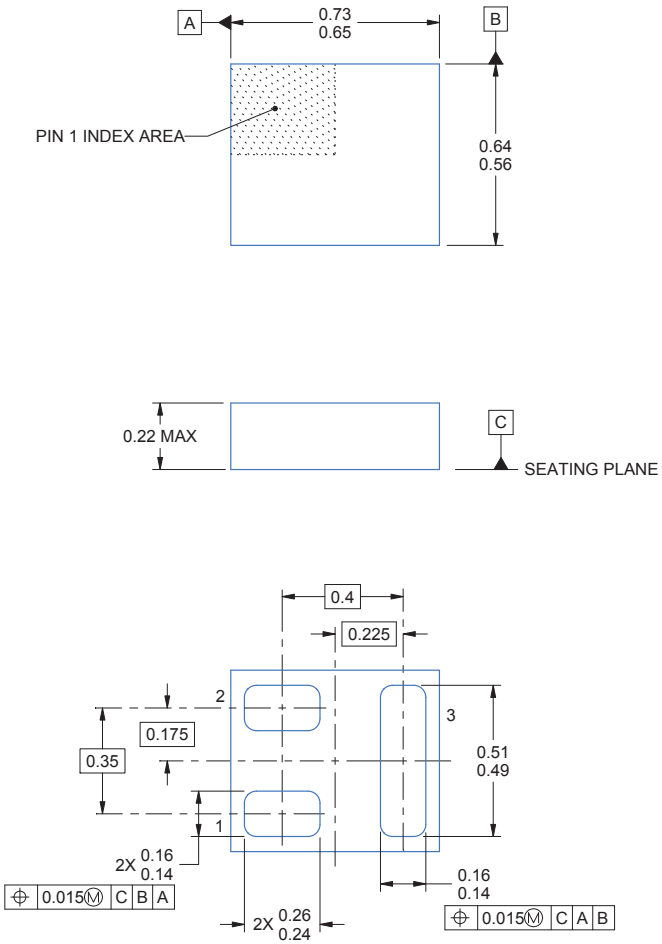

(1) All linear dimensions are in millimeters. Any dimensions in parenthesis are for reference only. Dimensioning and tolerancing per ASME Y14.5M.

(2) This drawing is subject to change without notice.

(3) This package is a Pb-free bump design. Bump finish may vary. To determine the exact finish, refer to the device data sheet or contact a local TI representative.

Table 1. Pin Configuration

POSITION	DESIGNATION
Pin 1	Gate
Pin 2	Source
Pin 3	Drain

Copyright © 2017–2018, Texas Instruments Incorporated

PACKAGING INFORMATION

Orderable Device	Status (1)	Package Type	Package Drawing	Pins	Package Qty	Eco Plan (2)	Lead/Ball Finish (6)	MSL Peak Temp (3)	Op Temp (°C)	Device Marking (4/5)	Samples
CSD25501F3	ACTIVE	PICOSTAR	YJN	3	3000	Green (RoHS & no Sb/Br)	Call TI	Level-1-260C-UNLIM	-55 to 150	V	Samples
CSD25501F3T	ACTIVE	PICOSTAR	YJN	3	250	Green (RoHS & no Sb/Br)	Call TI	Level-1-260C-UNLIM	-55 to 150	V	Samples

(1) The marketing status values are defined as follows:
ACTIVE: Product device recommended for new designs.
LIFEBUY: TI has announced that the device will be discontinued, and a lifetime-buy period is in effect.
NRND: Not recommended for new designs. Device is in production to support existing customers, but TI does not recommend using this part in a new design.
PREVIEW: Device has been announced but is not in production. Samples may or may not be available.
OBSOLETE: TI has discontinued the production of the device.

(2) **RoHS:** TI defines "RoHS" to mean semiconductor products that are compliant with the current EU RoHS requirements for all 10 RoHS substances, including the requirement that RoHS substance do not exceed 0.1% by weight in homogeneous materials. Where designed to be soldered at high temperatures, "RoHS" products are suitable for use in specified lead-free processes. TI may reference these types of products as "Pb-Free".
RoHS Exempt: TI defines "RoHS Exempt" to mean products that contain lead but are compliant with EU RoHS pursuant to a specific EU RoHS exemption.
Green: TI defines "Green" to mean the content of Chlorine (Cl) and Bromine (Br) based flame retardants meet JS709B low halogen requirements of <=1000ppm threshold. Antimony trioxide based flame retardants must also meet the <=1000ppm threshold requirement.

(3) MSL, Peak Temp. - The Moisture Sensitivity Level rating according to the JEDEC industry standard classifications, and peak solder temperature.

(4) There may be additional marking, which relates to the logo, the lot trace code information, or the environmental category on the device.

(5) Multiple Device Markings will be inside parentheses. Only one Device Marking contained in parentheses and separated by a "~" will appear on a device. If a line is indented then it is a continuation of the previous line and the two combined represent the entire Device Marking for that device.

(6) Lead/Ball Finish - Orderable Devices may have multiple material finish options. Finish options are separated by a vertical ruled line. Lead/Ball Finish values may wrap to two lines if the finish value exceeds the maximum column width.

Important Information and Disclaimer: The information provided on this page represents TI's knowledge and belief as of the date that it is provided. TI bases its knowledge and belief on information provided by third parties, and makes no representation or warranty as to the accuracy of such information. Efforts are underway to better integrate information from third parties. TI has taken and continues to take reasonable steps to provide representative and accurate information but may not have conducted destructive testing or chemical analysis on incoming materials and chemicals. TI and TI suppliers consider certain information to be proprietary, and thus CAS numbers and other limited information may not be available for release.

In no event shall TI's liability arising out of such information exceed the total purchase price of the TI part(s) at issue in this document sold by TI to Customer on an annual basis.

TAPE AND REEL INFORMATION

REEL DIMENSIONS

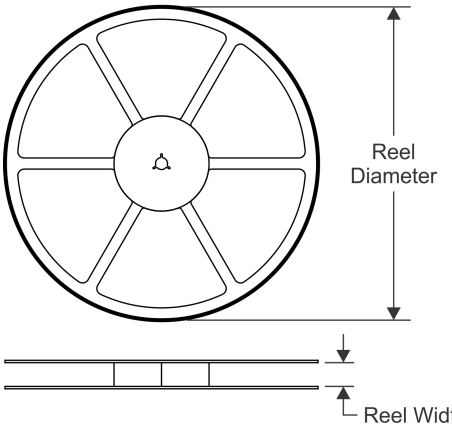

TAPE DIMENSIONS

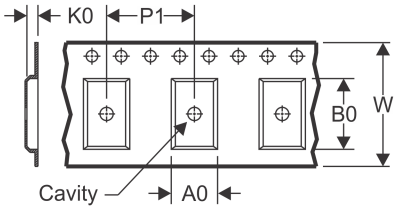

A0	Dimension designed to accommodate the component width
B0	Dimension designed to accommodate the component length
K0	Dimension designed to accommodate the component thickness
W	Overall width of the carrier tape
P1	Pitch between successive cavity centers

QUADRANT ASSIGNMENTS FOR PIN 1 ORIENTATION IN TAPE

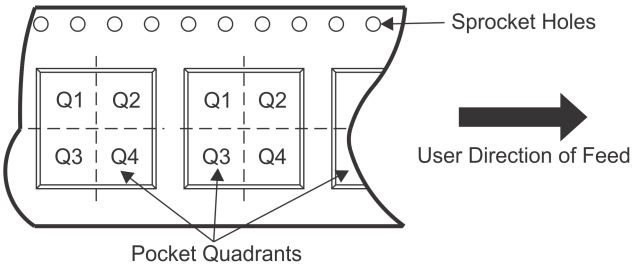

*All dimensions are nominal

Device	Package Type	Package Drawing	Pins	SPQ	Reel Diameter (mm)	Reel Width W1 (mm)	A0 (mm)	B0 (mm)	K0 (mm)	P1 (mm)	W (mm)	Pin1 Quadrant
CSD25501F3	PICOSTAR	YJN	3	3000	180.0	8.4	0.7	0.79	0.31	4.0	8.0	Q2
CSD25501F3T	PICOSTAR	YJN	3	250	180.0	8.4	0.7	0.79	0.31	4.0	8.0	Q2

TAPE AND REEL BOX DIMENSIONS

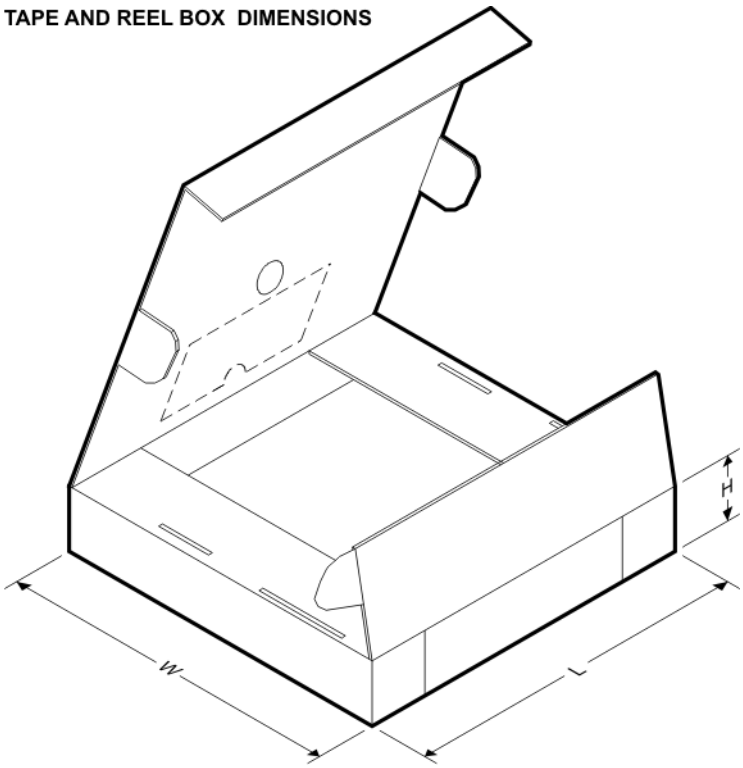

*All dimensions are nominal

Device	Package Type	Package Drawing	Pins	SPQ	Length (mm)	Width (mm)	Height (mm)
CSD25501F3	PICOSTAR	YJN	3	3000	182.0	182.0	20.0
CSD25501F3T	PICOSTAR	YJN	3	250	182.0	182.0	20.0

IMPORTANT NOTICE

Texas Instruments Incorporated (TI) reserves the right to make corrections, enhancements, improvements and other changes to its semiconductor products and services per JESD46, latest issue, and to discontinue any product or service per JESD48, latest issue. Buyers should obtain the latest relevant information before placing orders and should verify that such information is current and complete.

TI's published terms of sale for semiconductor products (http://www.ti.com/sc/docs/stdterms.htm) apply to the sale of packaged integrated circuit products that TI has qualified and released to market. Additional terms may apply to the use or sale of other types of TI products and services.

Reproduction of significant portions of TI information in TI data sheets is permissible only if reproduction is without alteration and is accompanied by all associated warranties, conditions, limitations, and notices. TI is not responsible or liable for such reproduced documentation. Information of third parties may be subject to additional restrictions. Resale of TI products or services with statements different from or beyond the parameters stated by TI for that product or service voids all express and any implied warranties for the associated TI product or service and is an unfair and deceptive business practice. TI is not responsible or liable for any such statements.

Buyers and others who are developing systems that incorporate TI products (collectively, "Designers") understand and agree that Designers remain responsible for using their independent analysis, evaluation and judgment in designing their applications and that Designers have full and exclusive responsibility to assure the safety of Designers' applications and compliance of their applications (and of all TI products used in or for Designers' applications) with all applicable regulations, laws and other applicable requirements. Designer represents that, with respect to their applications, Designer has all the necessary expertise to create and implement safeguards that (1) anticipate dangerous consequences of failures, (2) monitor failures and their consequences, and (3) lessen the likelihood of failures that might cause harm and take appropriate actions. Designer agrees that prior to using or distributing any applications that include TI products, Designer will thoroughly test such applications and the functionality of such TI products as used in such applications.

TI's provision of technical, application or other design advice, quality characterization, reliability data or other services or information, including, but not limited to, reference designs and materials relating to evaluation modules, (collectively, "TI Resources") are intended to assist designers who are developing applications that incorporate TI products; by downloading, accessing or using TI Resources in any way, Designer (individually or, if Designer is acting on behalf of a company, Designer's company) agrees to use any particular TI Resource solely for this purpose and subject to the terms of this Notice.

TI's provision of TI Resources does not expand or otherwise alter TI's applicable published warranties or warranty disclaimers for TI products, and no additional obligations or liabilities arise from TI providing such TI Resources. TI reserves the right to make corrections, enhancements, improvements and other changes to its TI Resources. TI has not conducted any testing other than that specifically described in the published documentation for a particular TI Resource.

Designer is authorized to use, copy and modify any individual TI Resource only in connection with the development of applications that include the TI product(s) identified in such TI Resource. NO OTHER LICENSE, EXPRESS OR IMPLIED, BY ESTOPPEL OR OTHERWISE TO ANY OTHER TI INTELLECTUAL PROPERTY RIGHT, AND NO LICENSE TO ANY TECHNOLOGY OR INTELLECTUAL PROPERTY RIGHT OF TI OR ANY THIRD PARTY IS GRANTED HEREIN, including but not limited to any patent right, copyright, mask work right, or other intellectual property right relating to any combination, machine, or process in which TI products or services are used. Information regarding or referencing third-party products or services does not constitute a license to use such products or services, or a warranty or endorsement thereof. Use of TI Resources may require a license from a third party under the patents or other intellectual property of the third party, or a license from TI under the patents or other intellectual property of TI.

TI RESOURCES ARE PROVIDED "AS IS" AND WITH ALL FAULTS. TI DISCLAIMS ALL OTHER WARRANTIES OR REPRESENTATIONS, EXPRESS OR IMPLIED, REGARDING RESOURCES OR USE THEREOF, INCLUDING BUT NOT LIMITED TO ACCURACY OR COMPLETENESS, TITLE, ANY EPIDEMIC FAILURE WARRANTY AND ANY IMPLIED WARRANTIES OF MERCHANTABILITY, FITNESS FOR A PARTICULAR PURPOSE, AND NON-INFRINGEMENT OF ANY THIRD PARTY INTELLECTUAL PROPERTY RIGHTS. TI SHALL NOT BE LIABLE FOR AND SHALL NOT DEFEND OR INDEMNIFY DESIGNER AGAINST ANY CLAIM, INCLUDING BUT NOT LIMITED TO ANY INFRINGEMENT CLAIM THAT RELATES TO OR IS BASED ON ANY COMBINATION OF PRODUCTS EVEN IF DESCRIBED IN TI RESOURCES OR OTHERWISE. IN NO EVENT SHALL TI BE LIABLE FOR ANY ACTUAL, DIRECT, SPECIAL, COLLATERAL, INDIRECT, PUNITIVE, INCIDENTAL, CONSEQUENTIAL OR EXEMPLARY DAMAGES IN CONNECTION WITH OR ARISING OUT OF TI RESOURCES OR USE THEREOF, AND REGARDLESS OF WHETHER TI HAS BEEN ADVISED OF THE POSSIBILITY OF SUCH DAMAGES.

Unless TI has explicitly designated an individual product as meeting the requirements of a particular industry standard (e.g., ISO/TS 16949 and ISO 26262), TI is not responsible for any failure to meet such industry standard requirements.

Where TI specifically promotes products as facilitating functional safety or as compliant with industry functional safety standards, such products are intended to help enable customers to design and create their own applications that meet applicable functional safety standards and requirements. Using products in an application does not by itself establish any safety features in the application. Designers must ensure compliance with safety-related requirements and standards applicable to their applications. Designer may not use any TI products in life-critical medical equipment unless authorized officers of the parties have executed a special contract specifically governing such use. Life-critical medical equipment is medical equipment where failure of such equipment would cause serious bodily injury or death (e.g., life support, pacemakers, defibrillators, heart pumps, neurostimulators, and implantables). Such equipment includes, without limitation, all medical devices identified by the U.S. Food and Drug Administration as Class III devices and equivalent classifications outside the U.S.

TI may expressly designate certain products as completing a particular qualification (e.g., Q100, Military Grade, or Enhanced Product). Designers agree that it has the necessary expertise to select the product with the appropriate qualification designation for their applications and that proper product selection is at Designers' own risk. Designers are solely responsible for compliance with all legal and regulatory requirements in connection with such selection.

Designer will fully indemnify TI and its representatives against any damages, costs, losses, and/or liabilities arising out of Designer's non-compliance with the terms and provisions of this Notice.

Mailing Address: Texas Instruments, Post Office Box 655303, Dallas, Texas 75265
Copyright © 2018, Texas Instruments Incorporated