IXYSPOWER
Efficiency Through Technology

NEW PRODUCT BRIEF

Linear L2™ Power MOSFETs

NEXT GENERATION OF EXTENDED SAFE OPERATING AREA RUGGED POWER MOSFETS

JULY 2009

OVERVIEW

IXYS Linear L2™ MOSFETs are distinguished as a new class of rugged Power MOSFETs tailored specifically for applications that require Power MOSFETs to operate in their current saturation region. These new devices feature low static drain to source on-resistances and provide unparalleled performance and reliability in controlled current output applications. Typical applications that stand to benefit from this new class of extended FBSOA power MOSFETs include circuit breakers, current sources, programmable loads, power controllers, power regulators, motor control, power amplifiers and soft start applications.

In the linear mode, a power MOSFET is subjected to high thermo-electrical stress caused by the simultaneous occurrence of high drain voltage and current resulting in high power dissipation. IXYS has optimized the internal structure of these MOSFETs achieving an extended "forward bias safe operating area" (FBSOA) capability to overcome the limitations posed by conventional power MOSFETs operating in current saturation region. This allows for a larger operating "window" as dictated by the power limitations of the device, resulting in improved ruggedness and reliability. These extended FBSOA Power MOSFETs are not intended for high speed switching applications.

IXYS provides a wide selection of extended FBSOA Linear L2™ Power MOSFETs. Drain source voltage ratings (Vds) include 100V, 200V, 250V, 500V, and 600V, while drain currents range from 15 amperes to 200 amperes. Package options include a variety of international standard packages. These package options include the TO-247, TO-263, TO-220, TO-264, TO-3P, TO-268, SOT227, and PLUS247. Other key attributes the Linear L2™ Power MOSFET family present include avalanche capabilities and a guaranteed FBSOA at 75 degrees Centigrade.

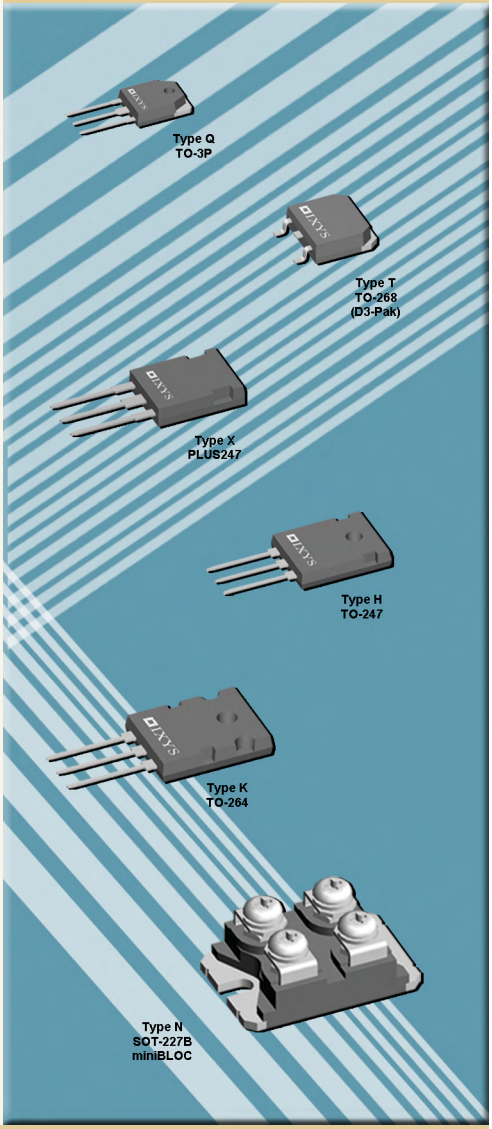

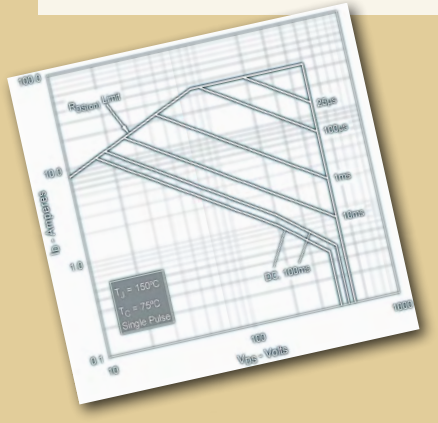

FEATURES

- Designed to sustain high power in linear mode operation
- Low static drain to source on-resistances
- Avalanche rated
- Guaranteed FBSOA at 75°C

BENEFITS

- Improved over-all system reliability
- Extended FBSOA for "wider operating window"
- Improved energy efficiency and performance

APPLICATIONS

- Current Sources
- Circuit breakers
- Soft start applications
- Power amplifiers
- Programmable loads
- Power regulators
- Motor control
- Power Controllers

Linear L2™ Power MOSFETs Summary Table

Part Number	Vdss max (V)	ID(cont) Tc=25°C (A)	RthJC max (°C/W)	SOA specification power (W) Tc = 75	Rds(on) max TJ=25°C (Ω)	Qg typ (nC)	Pd (W)	Package Style
IXTH75N10L2	100	75	0.31	240 at Vds=80V, Id=3A	0.021	215	400	TO-247
IXTT75N10L2	100	75	0.31	240 at Vds=80V, Id=3A	0.021	215	400	TO-268
IXTH110N10L2	100	110	0.21	360 at Vds=80V, Id =3.6A	0.018	260	600	TO-247
IXTT110N10L2	100	110	0.21	360 at Vds=80V, Id =3.6A	0.018	260	600	TO-268
IXTN200N10L2	100	178	0.15	500 at Vds=100V, Id=5A	0.011	540	830	SOT-227
IXTK200N10L2	100	200	0.12	625 at Vds=100V, Id=6.25A	0.011	540	1040	TO-264
IXTX200N10L2	100	200	0.12	625 at Vds=100V, Id=6.25A	0.011	540	1040	PLUS247
IXTH60N20L2	200	60	0.23	300 at Vds=160V, Id=1.88A	0.045	255	540	TO-247
IXTQ60N20L2	200	60	0.23	300 at Vds=160V, Id=1.88A	0.045	255	540	TO-3P
IXTT60N20L2	200	60	0.23	300 at Vds=160V, Id=1.88A	0.045	255	540	TO-268
IXTN110N20L2	200	100	0.17	350 at Vds=200V, Id=1.75A	0.024	500	735	SOT-227
IXTK110N20L2	200	110	0.13	575 at Vds=200V, Id=2.88A	0.024	500	960	TO-264
IXTX110N20L2	200	110	0.13	575 at Vds=200V, Id=2.88A	0.024	500	960	PLUS247
IXTK90N25L2	250	90	0.13	575 at Vds=250V, Id=2.3A	0.033	640	960	TO-264
IXTN90N25L2	250	90	0.17	350 at Vds=250V, Id=1.4A	0.033	640	735	SOT-227
IXTX90N25L2	250	90	0.13	575 at Vds=250V, Id=2.3A	0.033	640	960	PLUS247
IXTH15N50L2	500	15	0.42	150 at Vds=400V, Id=0.375A	0.48	123	300	TO-247
IXTP15N50L2	500	15	0.42	150 at Vds=400V, Id=0.375A	0.48	123	300	TO-220
IXTH30N50L2	500	30	0.31	200 at Vds=400V, Id=0.5A	0.2	240	400	TO-247
IXTQ30N50L2	500	30	0.31	200 at Vds=400V, Id=0.5A	0.2	240	400	TO-3P
IXTT30N50L2	500	30	0.31	200 at Vds=400V, Id=0.5A	0.2	240	400	TO-268
IXTH40N50L2	500	40	0.23	320 at Vds=400V, Id=0.8A	0.17	320	540	TO-247
IXTQ40N50L2	500	40	0.23	320 at Vds=400V, Id=0.8A	0.17	320	540	TO-3P
IXTT40N50L2	500	40	0.23	320 at Vds=400V, Id=0.8A	0.17	320	540	TO-268
IXTN60N50L2	500	53	0.17	360 at Vds=400V, Id=0.9A	0.1	610	735	SOT-227
IXTK60N50L2	500	60	0.13	440 at Vds=400V, Id=1.1A	0.1	610	960	TO-264
IXTX60N50L2	500	60	0.13	440 at Vds=400V, Id=1.1A	0.1	610	960	PLUS247
IXTH30N60L2	600	30	0.23	288 at Vds=480V, Id=0.6A	0.24	335	540	TO-247
IXTQ30N60L2	600	30	0.23	288 at Vds=480V, Id=0.6A	0.24	335	540	TO-3P
IXTT30N60L2	600	30	0.23	288 at Vds=480v, Id=0.6A	0.24	335	540	TO-268

Application Circuits

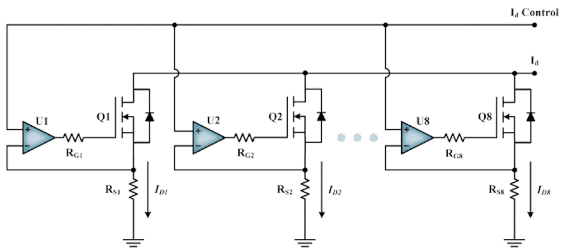

ELECTRONIC LOAD (PROGRAMMABLE RESISTIVE LOAD)

Electronic loads such as those used to test power supplies can benefit from the use of linear MOSFETs with an extended FBSOA. An electronic load is essentially a programmable resistor and is typically implemented with multiple high-voltage power MOSFETs operating in parallel.

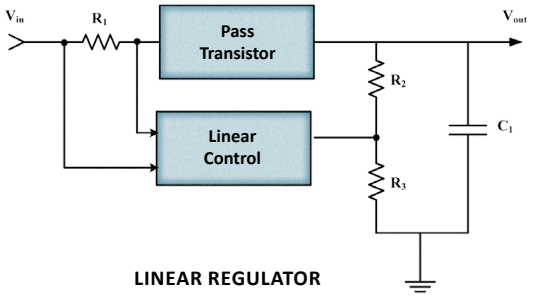

LINEAR REGULATOR

This figure depicts a basic linear regulator whose output is regulated by controlling the voltage drop across the Pass Transistor. The Pass Transistor is biased in the linear region and acts as a variable resistor.

LINEAR MOTOR CONTROL CIRCUIT
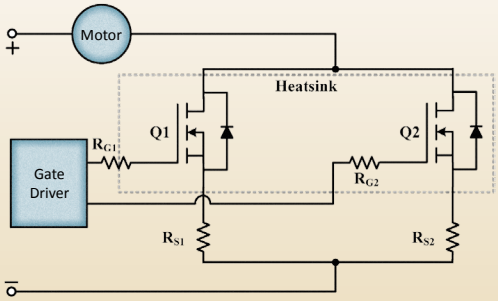
This figure portrays a motor control circuit in which a battery drives a motor in series with two power MOSFETs connected in parallel on the same heatsink. The drain current of the Power MOSFETs operating in the linear mode is determined by the gate-source voltage. The voltage across the motor terminals is the difference between the battery and drain-source voltage. The control is achieved through the gate driver, which checks the current flowing in the MOSFETs and establishes the right gate-source voltage.