STGD6NC60H

N-channel 600V - 7A - DPAK
Very fast PowerMESH™ IGBT

General features

Type	V_{CES}	$V_{CE(sat)}$Max @25°C	I_C @100°C
STGD6NC60H	600V	<2.5V	7A

- Low on voltage drop (V_{cesat})
- Low C_{RES} / C_{IES} ratio (no cross-conduction susceptibility)
- High frequency operation

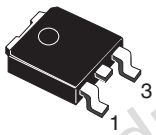

DPAK

Description

Using the latest high voltage technology based on a patented strip layout, STMicroelectronics has designed an advanced family of IGBTs, the PowerMESH™ IGBTs, with outstanding performances. The suffix "H" identifies a family optimized for high frequency application in order to achieve very high switching performances (reduced tfall) maintaining a low voltage drop.

Internal schematic diagram

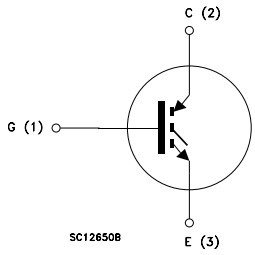

Applications

- High frequency inverters
- SMPS and PFC in both hard switch and resonant topologies
- Motor drivers

Order code

Part number	Marking	Package	Packaging
STGD6NC60HT4	GD6NC60H	DPAK	Tape & reel

Obsolete Product(s) - Obsolete Product(s)

Contents

1 Electrical ratings 3

2 Electrical characteristics 4

2.1 Electrical characteristics (curves) 6

3 Test circuit 9

4 Package mechanical data 10

5 Packaging mechanical data 12

6 Revision history 13

Obsolete Product(s) - Obsolete Product(s)
Obsolete Product(s) - Obsolete Product(s)

1 Electrical ratings

Table 1. Absolute maximum ratings

Symbol	Parameter	Value	Unit
V_{CES}	Collector-emitter voltage (V_{GS} = 0)	600	V
I_C(1)	Collector current (continuous) at T_C = 25°C	15	A
I_C(1)	Collector current (continuous) at T_C = 100°C	7	A
I_{CM}(2)	Collector current (pulsed)	21	A
V_{GE}	Gate-emitter voltage	±20	V
P_{TOT}	Total dissipation at T_C = 25°C	56	W
T_{stg}	Storage temperature	– 55 to 150	°C
T_j	Operating junction temperature		
T_l	Maximum lead temperature for soldering purpose (for 10sec. 1.6 mm from case)	300	°C

1. Calculated according to the iterative formula::

$$I_C(T_C) = \frac{T_{JMAX} - T_C}{R_{THJ-C} \times V_{CESAT(MAX)}(T_C, I_C)}$$

2. Pulse width limited by max junction temperature

Table 2. Thermal resistance

Symbol	Parameter	Value	Unit
Rthj-case	Thermal resistance junction-case max	2	°C/W
Rthj-amb	Thermal resistance junction-ambient max	62.5	°C/W

Obsolete Product(s) - Obsolete Product(s)
Obsolete Product(s) - Obsolete Product(s)

2 Electrical characteristics

(T_{CASE}=25°C unless otherwise specified)

Table 3. Static

Symbol	Parameter	Test conditions	Min.	Typ.	Max.	Unit
$V_{BR(CES)}$	Collector-emitter breakdown voltage	I_C= 1mA, V_{GE}= 0	600			V
$V_{CE(sat)}$	Collector-emitter saturation voltage	V_{GE}= 15V, I_C= 3A V_{GE}= 15V, I_C= 3A, Tc= 125°C		1.9 1.7	2.5	V V
$V_{GE(th)}$	Gate threshold voltage	V_{CE}= V_{GE}, I_C= 250 µA	3.75		5.75	V
I_{CES}	Collector cut-off current (V_{GE} = 0)	V_{CE}= Max rating,T_C= 25°C V_{CE}=Max rating,T_C= 125°C			10 1	µA mA
I_{GES}	Gate-emitter leakage current (V_{CE} = 0)	V_{GE}= ±20V, V_{CE}= 0			±100	nA
g_{fs}	Forward transconductance	V_{CE} = 15V, I_C= 3A		3		S

Table 4. Dynamic

Symbol	Parameter	Test conditions	Min.	Typ.	Max.	Unit
C_{ies} C_{oes} C_{res}	Input capacitance Output capacitance Reverse transfer capacitance	V_{CE} = 25V, f = 1MHz, V_{GE} = 0		205 32 5.5		pF pF pF
Q_g Q_{ge} Q_{gc}	Total gate charge Gate-emitter charge Gate-collector charge	V_{CE} = 390V, I_C = 3A, V_{GE} = 15V, *(see Figure 16)*		13.6 3.4 5.1		nC nC nC
I_{CL}	Turn-off SOA minimum current	V_{clamp}=390V, Tj=150°C, R_G=10Ω, V_{GE}=15V		19		A

Obsolete Product(s) - Obsolete Product(s)
Obsolete Product(s) - Obsolete Product(s)

Table 5. Switching on/off (inductive load)

Symbol	Parameter	Test conditions	Min.	Typ.	Max.	Unit
$t_{d(on)}$ t_r $(di/dt)_{on}$	Turn-on delay time Current rise time Turn-on current slope	V_{CC} = 390V, I_C = 3A R_G= 10Ω, V_{GE}= 15V, Tj= 25°C *(see Figure 17)*		12 5 612		ns ns A/µs
$t_{d(on)}$ t_r $(di/dt)_{on}$	Turn-on delay time Current rise time Turn-on current slope	V_{CC} = 390V, I_C = 3A R_G= 10Ω, V_{GE}= 15V, Tj=125°C *(see Figure 17)*		13 4.3 560		ns ns A/µs
$t_r(V_{off})$ $t_d(_{off})$ t_f	Off voltage rise time Turn-off delay time Current fall time	V_{CC} = 390V, I_C = 3A, R_{GE} = 10Ω, V_{GE} = 15V,T_J=25°C *(see Figure 17)*		40 76 100		ns ns ns
$t_r(V_{off})$ $t_d(_{off})$ t_f	Off voltage rise time Turn-off delay time Current fall time	V_{CC} = 390V, I_C = 3A, R_{GE}=10Ω, V_{GE} =15V Tj=125°C *(see Figure 17)*		60 98 124		ns ns ns

Table 6. Switching energy (inductive load)

Symbol	Parameter	Test conditions	Min.	Typ.	Max.	Unit
E_{on}(1) E_{off}(2) E_{ts}	Turn-on switching losses Turn-off switching losses Total switching losses	V_{CC} = 390V, I_C = 3A R_G= 10Ω, V_{GE}=15V, Tj=25°C *(see Figure 17)*		20 68 88		µJ µJ µJ
E_{on}(1) E_{off}(2) E_{ts}	Turn-on switching losses Turn-off switching losses Total switching losses	V_{CC} = 390V, I_C = 3A R_G= 10Ω, V_{GE}= 15V, Tj= 125°C *(see Figure 17)*		37 93 130		µJ µJ µJ

1. Eon is the tun-on losses when a typical diode is used in the test circuit in *Figure 17*. If the IGBT is offered in a package with a co-pak diode, the co-pack diode is used as external diode. IGBTs & Diode are at the same temperature (25°C and 125°C)
2. Turn-off losses include also the tail of the collector current

Obsolete Product(s) - Obsolete Product(s)

2.1 Electrical characteristics (curves)

Figure 1. Output characteristics

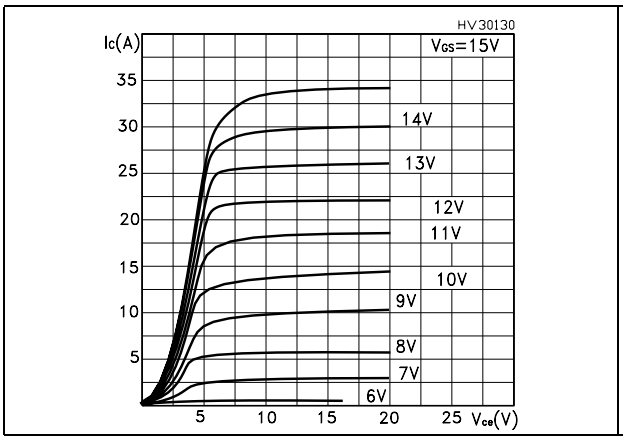

Figure 2. Transfer characteristics

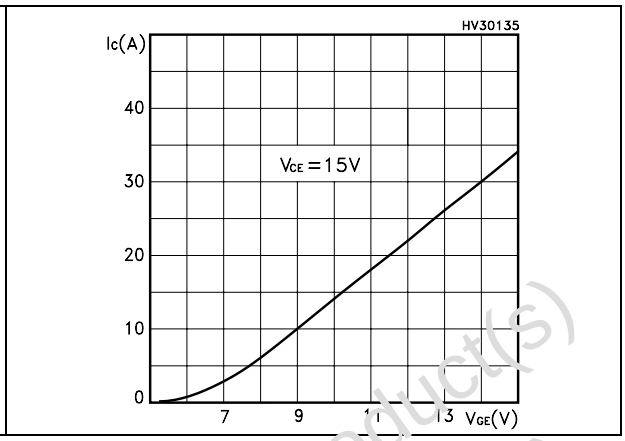

Figure 3. Transconductance

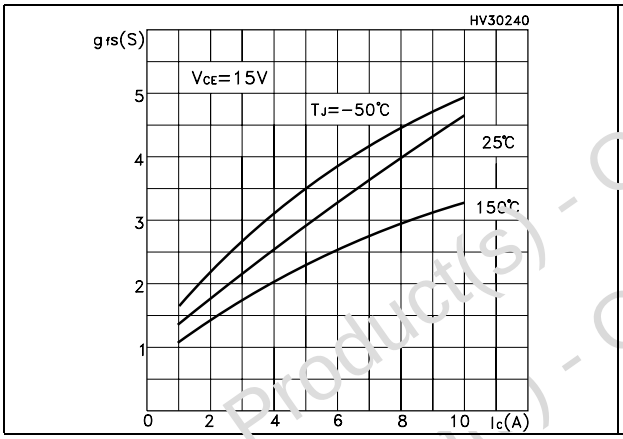

Figure 4. Collector-emitter on voltage vs temperature

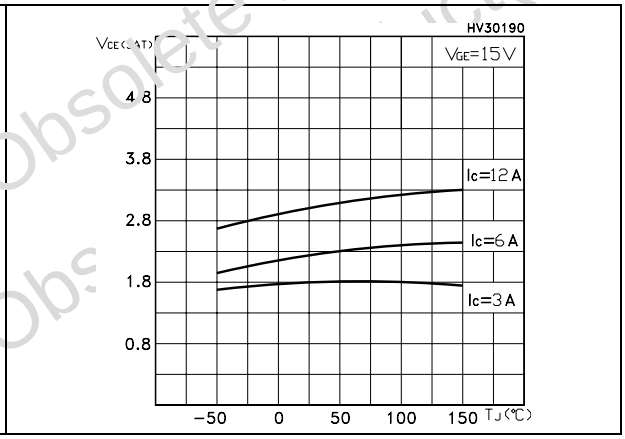

Figure 5. Gate charge vs gate-source voltage

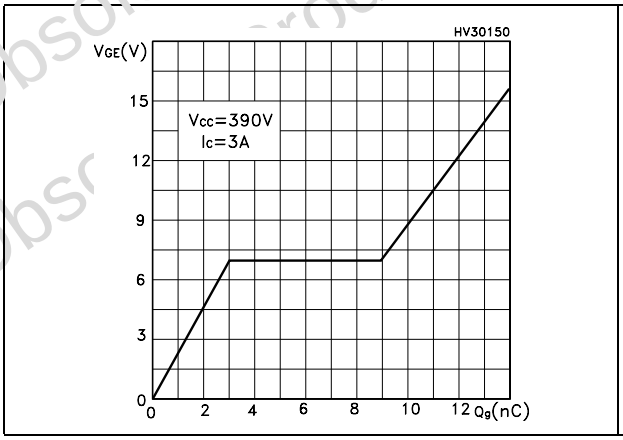

Figure 6. Capacitance variations

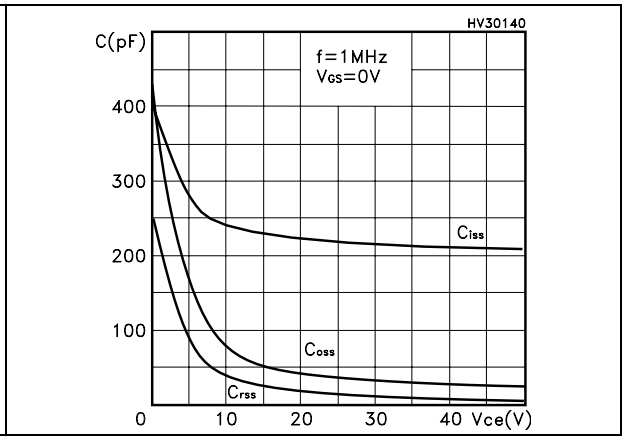

Obsolete Product(s) - Obsolete Product(s)

Figure 7. Normalized gate threshold voltage vs temperature

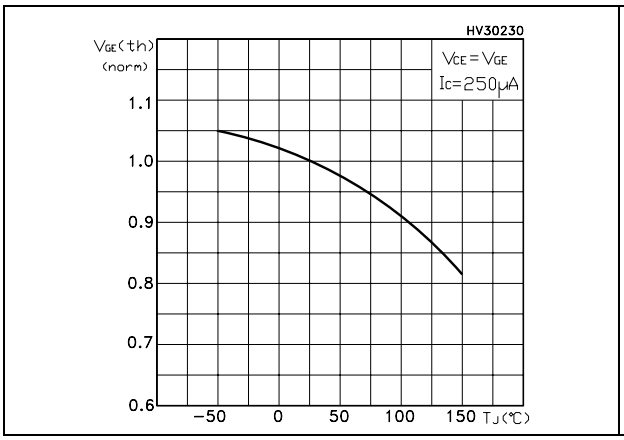

Figure 8. Collector-emitter on voltage vs collector current

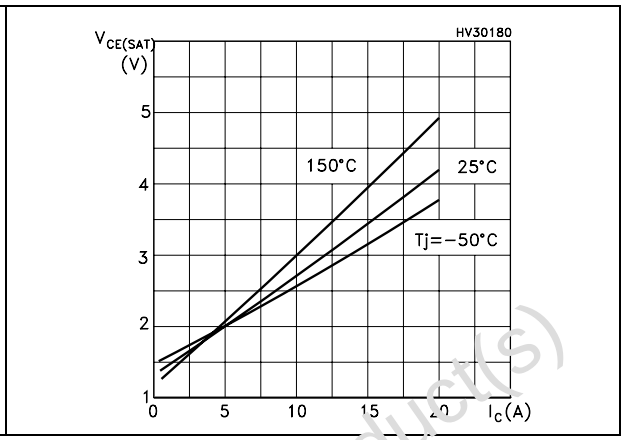

Figure 9. Normalized breakdown voltage vs temperature

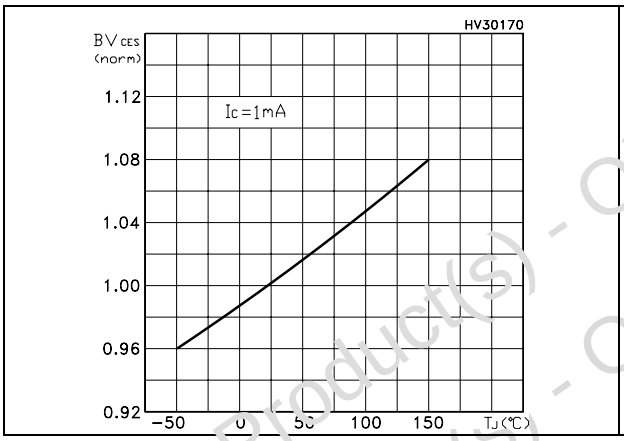

Figure 10. Switching losses vs temperature

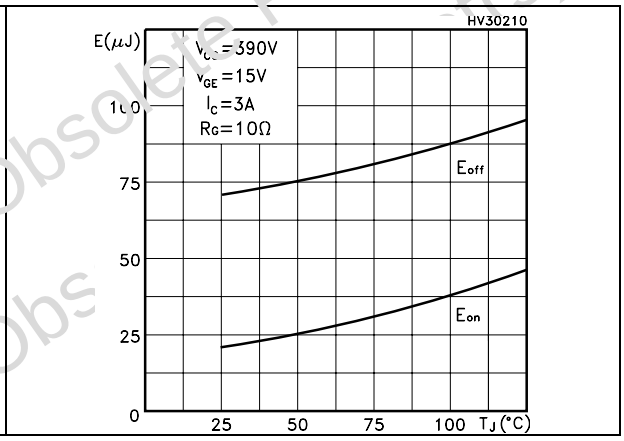

Figure 11. Switching losses vs gate resistance

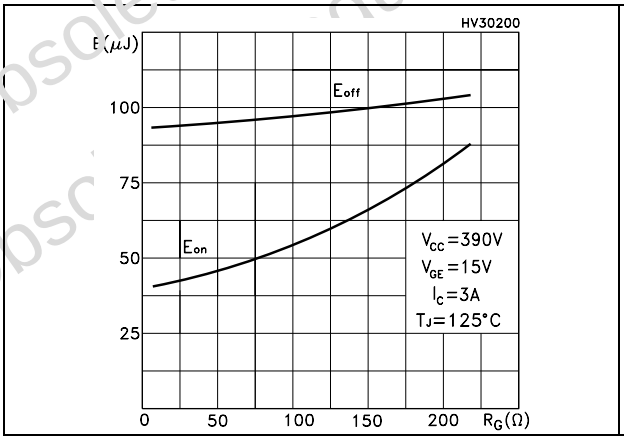

Figure 12. Switching losses vs collector current

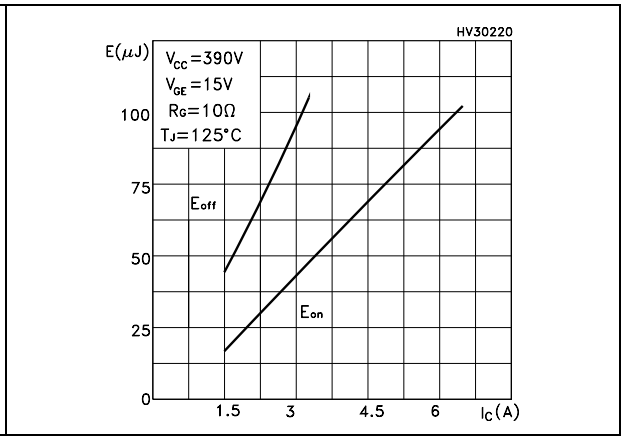

Obsolete Product(s) - Obsolete Product(s)

Figure 13. Thermal impedance

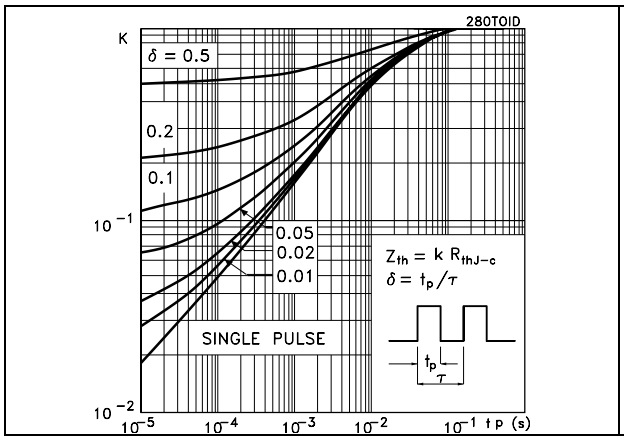

Figure 14. Turn-off SOA

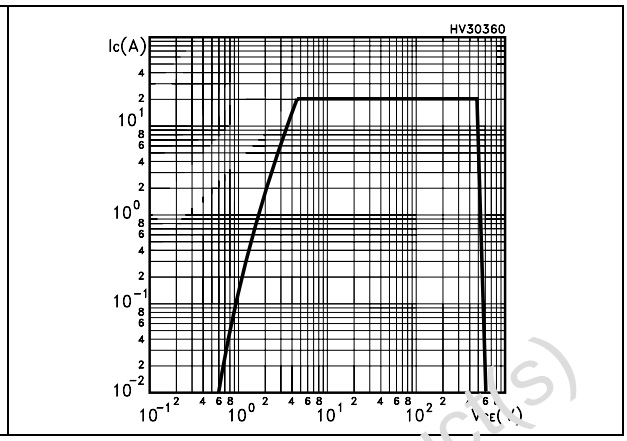

Obsolete Product(s) - Obsolete Product(s)
Obsolete Product(s) - Obsolete Product(s)

3 Test circuit

Figure 15. Test circuit for inductive load switching

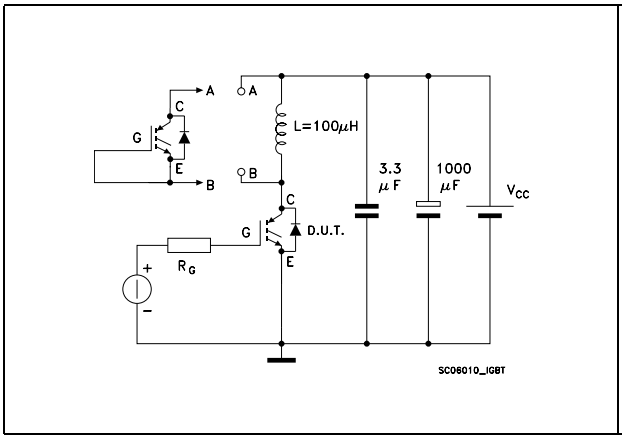

Figure 16. Gate charge test circuit

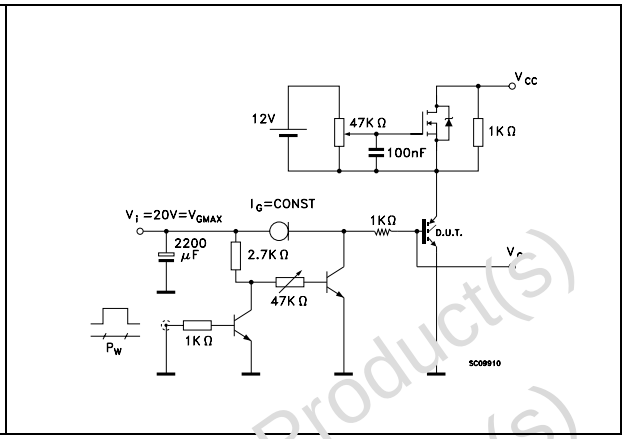

Figure 17. Switching waveform

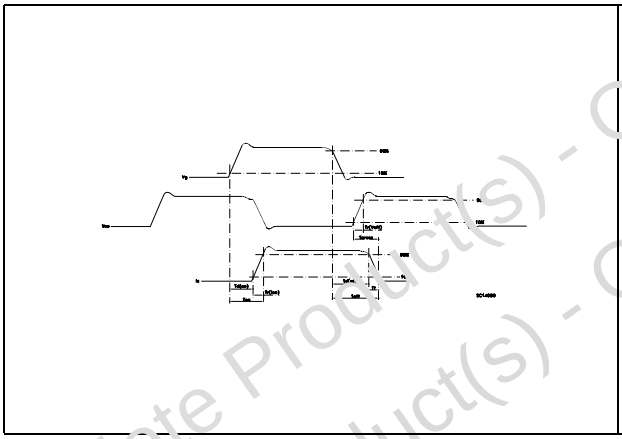

Figure 18. Diode recovery time waveform

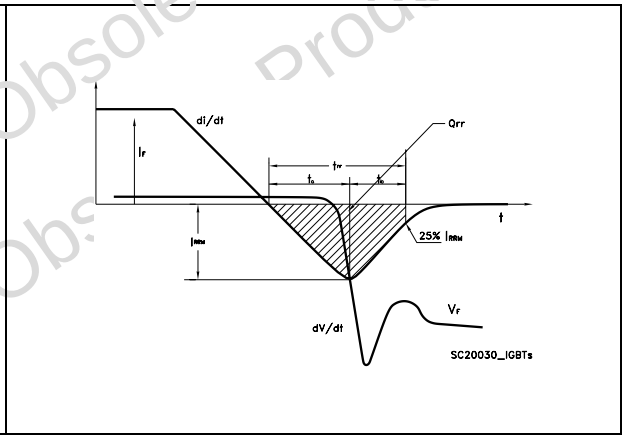

Obsolete Product(s) - Obsolete Product(s)

4 Package mechanical data

In order to meet environmental requirements, ST offers these devices in ECOPACK® packages. These packages have a Lead-free second level interconnect. The category of second level interconnect is marked on the package and on the inner box label, in compliance with JEDEC Standard JESD97. The maximum ratings related to soldering conditions are also marked on the inner box label. ECOPACK is an ST trademark. ECOPACK specifications are available at: www.st.com

Obsolete Product(s) - Obsolete Product(s)
Obsolete Product(s) - Obsolete Product(s)

TO-252 (DPAK) MECHANICAL DATA

DIM.	mm			inch		
	MIN.	TYP.	MAX.	MIN.	TYP.	MAX.
A	2.20		2.40	0.087		0.094
A1	0.90		1.10	0.035		0.043
A2	0.03		0.23	0.001		0.009
B	0.64		0.90	0.025		0.035
B2	5.20		5.40	0.204		0.213
C	0.45		0.60	0.018		0.024
C2	0.48		0.60	0.019		0.024
D	6.00		6.20	0.236		0.244
E	6.40		6.60	0.252		0.260
G	4.40		4.60	0.173		0.181
H	9.35		10.10	0.368		0.398
L2		0.8			0.031	
L4	0.60		1.00	0.024		0.039
V2	0°		8°	0°		0°

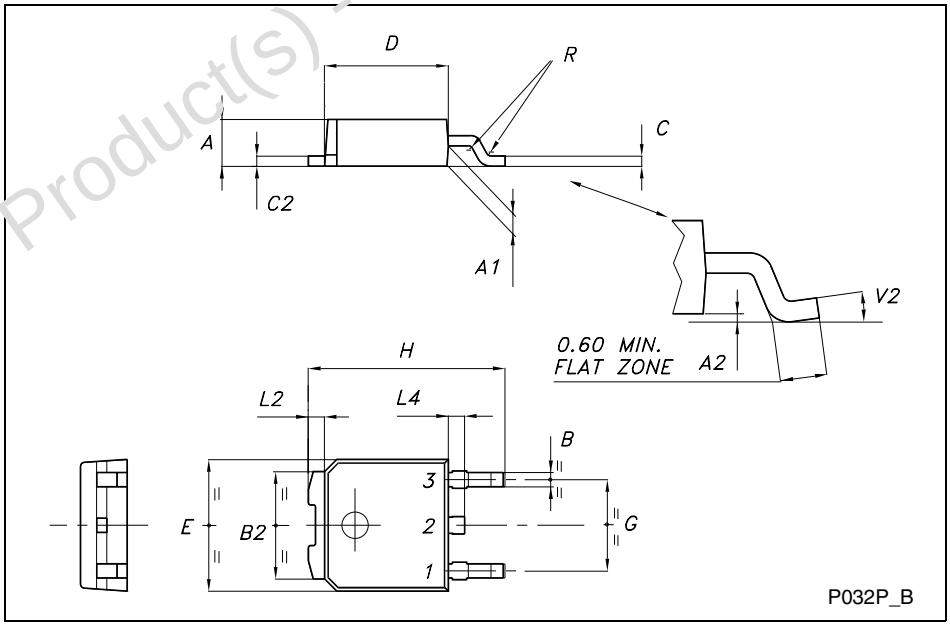

Obsolete Product(s) - Obsolete Product(s)

5 Packaging mechanical data

DPAK FOOTPRINT

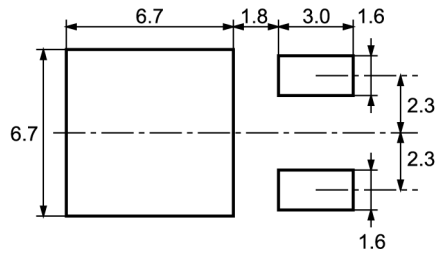

All dimensions are in millimeters

TAPE AND REEL SHIPMENT

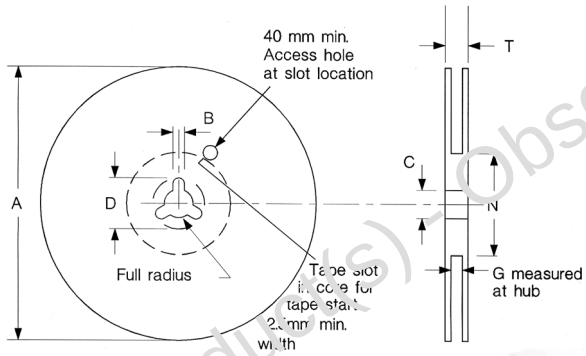

REEL MECHANICAL DATA

DIM.	mm		inch	
	MIN.	MAX.	MIN.	MAX.
A		330		12.992
B	1.5		0.059	
C	12.8	13.2	0.504	0.520
D	20.2		0.795	
G	16.4	18.4	0.645	0.724
N	50		1.968	
T		22.4		0.881

BASE QTY	BULK QTY
2500	2500

TAPE MECHANICAL DATA

DIM.	mm		inch	
	MIN.	MAX.	MIN.	MAX.
A0	6.8	7	0.267	0.275
B0	10.4	10.6	0.409	0.417
B1		12.1		0.476
D	1.5	1.6	0.059	0.063
D1	1.5		0.059	
E	1.65	1.85	0.065	0.073
F	7.4	7.6	0.291	0.299
K0	2.55	2.75	0.100	0.108
P0	3.9	4.1	0.153	0.161
P1	7.9	8.1	0.311	0.319
P2	1.9	2.1	0.075	0.082
R	40		1.574	
W	15.7	16.3	0.618	0.641

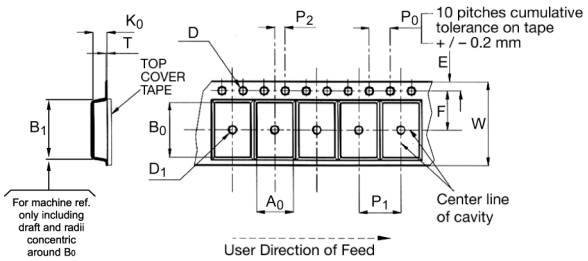

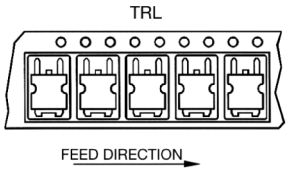

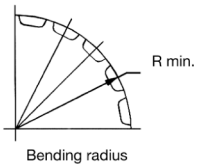

Obsolete Product(s) - Obsolete Product(s)

6 Revision history

Table 7. Revision history

Date	Revision	Changes
14-Jun-2005	1	First Release
07-Mar-2006	2	Complete version
08-Feb-2007	3	The document has been reformatted

Obsolete Product(s) - Obsolete Product(s)
Obsolete Product(s) - Obsolete Product(s)

Please Read Carefully:

Information in this document is provided solely in connection with ST products. STMicroelectronics NV and its subsidiaries ("ST") reserve the right to make changes, corrections, modifications or improvements, to this document, and the products and services described herein at any time, without notice.

All ST products are sold pursuant to ST's terms and conditions of sale.

Purchasers are solely responsible for the choice, selection and use of the ST products and services described herein, and ST assumes no liability whatsoever relating to the choice, selection or use of the ST products and services described herein.

No license, express or implied, by estoppel or otherwise, to any intellectual property rights is granted under this document. If any part of this document refers to any third party products or services it shall not be deemed a license grant by ST for the use of such third party products or services, or any intellectual property contained therein or considered as a warranty covering the use in any manner whatsoever of such third party products or services or any intellectual property contained therein.

UNLESS OTHERWISE SET FORTH IN ST'S TERMS AND CONDITIONS OF SALE ST DISCLAIMS ANY EXPRESS OR IMPLIED WARRANTY WITH RESPECT TO THE USE AND/OR SALE OF ST PRODUCTS INCLUDING WITHOUT LIMITATION IMPLIED WARRANTIES OF MERCHANTABILITY, FITNESS FOR A PARTICULAR PURPOSE (AND THEIR EQUIVALENTS UNDER THE LAWS OF ANY JURISDICTION), OR INFRINGEMENT OF ANY PATENT, COPYRIGHT OR OTHER INTELLECTUAL PROPERTY RIGHT.

UNLESS EXPRESSLY APPROVED IN WRITING BY AN AUTHORIZED ST REPRESENTATIVE, ST PRODUCTS ARE NOT RECOMMENDED, AUTHORIZED OR WARRANTED FOR USE IN MILITARY, AIR CRAFT, SPACE, LIFE SAVING, OR LIFE SUSTAINING APPLICATIONS, NOR IN PRODUCTS OR SYSTEMS WHERE FAILURE OR MALFUNCTION MAY RESULT IN PERSONAL INJURY, DEATH, OR SEVERE PROPERTY OR ENVIRONMENTAL DAMAGE. ST PRODUCTS WHICH ARE NOT SPECIFIED AS "AUTOMOTIVE GRADE" MAY ONLY BE USED IN AUTOMOTIVE APPLICATIONS AT USER'S OWN RISK.

Resale of ST products with provisions different from the statements and/or technical features set forth in this document shall immediately void any warranty granted by ST for the ST product or service described herein and shall not create or extend in any manner whatsoever, any liability of ST.

ST and the ST logo are trademarks or registered trademarks of ST in various countries.

Information in this document supersedes and replaces all information previously supplied.

The ST logo is a registered trademark of STMicroelectronics. All other names are the property of their respective owners.

© 2007 STMicroelectronics - All rights reserved

STMicroelectronics group of companies

Australia - Belgium - Brazil - Canada - China - Czech Republic - Finland - France - Germany - Hong Kong - India - Israel - Italy - Japan - Malaysia - Malta - Morocco - Singapore - Spain - Sweden - Switzerland - United Kingdom - United States of America

www.st.com

Obsolete Product(s) - Obsolete Product(s)