REVISIONS				
ZONE	REV	DESCRIPTION	DATE	APPROVED
	A	ORIGINAL RELEASE	03-01-13	D.S.
	B	GND PLANE REMOVED FROM L2	05-23-13	D.S.

NOTES (UNLESS OTHERWISE SPECIFIED):

1. THIS DRAWING SPECIFIES THE REQUIREMENTS FOR A PRINTED WIRING BOARD IN ACCORDANCE WITH SPECIFICATION IPC-A-600 CLASS 2 (LATEST REVISION).

2. THE PWB MUST BE LEAD FREE ASSEMBLY PROCESS COMPATIBLE AND MUST BE ABLE TO HANDLE A MINIMUM OF 5 CYCLES AT 260 DEGREES CELSIUS FOR 10 SECONDS.

3. BASE MATERIAL - LAMINATE AND PREPREG SHALL MEET IPC-4101B-26, 83 or 98 (FR4)

   Tg - MUST BE GREATER THAN OR EQUAL TO 150 DEGREES CELSIUS.
   Td - MUST BE GREATER THAN OR EQUAL TO 330 DEGREES CELSIUS.

4. COPPER FOIL WEIGHT - SEE STACKUP DETAIL 'A'

5. CHARACTERISTIC IMPEDANCE - NONE

6. MINIMUM CONDUCTIVE WIDTH/SPACING TO BE .005"/.006"

7. PLATING FINISH - BOTH SIDES ENIG (ELECTROLESS NICKEL IMMERSION GOLD):
   .05080-.232 MICRON (2-8 MICROINCH) OF GOLD OVER
   2.540-6.350 MICRON (100-250 MICROINCH) OF NICKEL.

8. ALL THROUGH HOLE VIAS MAY BE PLATED SHUT.
9. SOLDERMASK - WHITE COLOR , BOTH SIDES.

   MODIFICATION OF SOLDERMASK IS NOT ALLOWED WITHOUT WRITTEN PERMISSION FROM FREESCALE.
10. SILKSCREEN - BLACK EPOXY INK, BOTH SIDES. NO SILK ON PADS.

11. ELECTRICAL TEST - 100% IPCD356.

12. PRINTED WIRING BOARD IS TO BE INDIVIDUALLY BAGGED.

13. DRC'S MUST BE RUN ON THE GERBER BEFORE BUILDING BOARDS, UNLESS PRIOR APPROVAL IS GIVEN IN WRITING BY FREESCALE.

14. ADD TEARDROPS TO ALL SIGNAL LAYERS.

15. SOLDER SAMPLES TO BE PROVIDED.

16. BASIC GRID INCREMENT AT 1:1 IS .0001.
17. SUPPLIER MARKINGS - ON SOLDER SIDE ONLY, WHERE SHOWN.

   - MUST BE UL RECOGNIZED AND MUST HAVE AN ID THAT CONFORMS TO UL94V-0

18. THE PWB WILL BE MARKED AS LEAD FREE BY USE OF AN INK STAMP (pb)

19. THE PWB WILL BE MARKED AS LEAD FREE PROCESS COMPATIBLE BY USE OF AN INK STAMP (260°C) ON SECONDARY SIDE SILKSCREENS

20. ALL PLATED AND NON-PLATED THROUGH HOLES ARE TO BE DRILLED AT PRIMARY DRILL STEP. ALL HOLE LOCATION TOLERANCES ARE TO BE +/-.002 IN REFERENCE TO THE PRIMARY DATUM.

21. FINISHED PCB MUST BE PANELIZED FOR ASSEMBLY ACCORDING TO CONTRACT MANUFACTURING REQUIREMENT. ADDITION OF .25" RAILS AND .125" NON-PLATED TOOLING HOLES ARE AT THE DISCRETION OF CONTRACT MANUFACTURER AND FAB HOUSE. PANELIZATION MUST BE APPROVED BY FREESCALE.

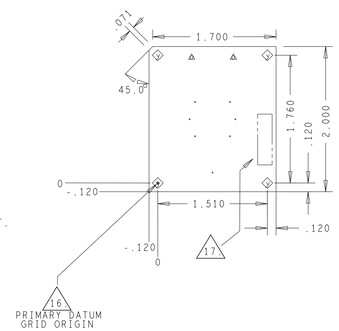

BY LAYER: TOP to BOTTOM				
ALL UNITS ARE IN MILS				
FIGURE	SIZE	TOLERANCE	PLATED	QTY
8 ·	8.0	+0.0/-8.0	PLATED	7
△	53.0	+3.0/-3.0	NON-PLATED	2
◇	125.0	+3.0/-3.0	NON-PLATED	4

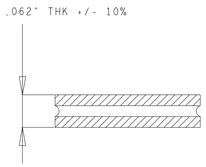

		FINISHED Cu WEIGHT
LAYER 1	COMPONENT SIDE	1 oz.
LAYER 2	SOLDER SIDE	1 oz.

DETAIL A
LAYER STACKUP
SCALE: NONE

___ PUBI (PUBLIC INFORMATION)
X FIUO (FREESCALE INTERNAL USE ONLY)
___ FCP (FREESCALE CONFIDENTIAL PROPRIETARY)

THIS DOCUMENT CONTAINS INFORMATION PROPRIETARY TO FREESCALE AND SHALL NOT BE USED FOR ENGINEERING DESIGN PROCUREMENT OR MANUFACTURE IN WHOLE OR IN PART WITHOUT THE CONSENT OF FREESCALE.

UNLESS OTHERWISE SPECIFIED
DIMENSIONS ARE IN INCHES
TOLERANCES ARE:
DECIMALS .XX ±.01 .XXX ±.005
ANGLES ±0-30'
√ RMS ALL MACHINED SURFACES
BREAK ALL SHARP EDGES AND CORNERS.
REMOVE BURRS.
UNDERLINED DIM. NOT TO SCALE.
THIRD ANGLE ORTHOGRAPHIC PROJECTION IS USED.

PART NO. 170-27877

APPROVALS	DATE
DRAWN MARIO VELASCO	05-23-13
CHECKED R. VILLARREAL	05-23-13
DESIGN ENGINEER RAFAEL DEL REY	05-23-13

FREESCALE SEMICONDUCTOR
6501 WILLIAM CANNON DRIVE WEST AUSTIN, TEXAS 78735 USA

TITLE: PRINTED WIRING BOARD
TWRPI-PROXIMITY

SIZE	CAD FILE NAME	DWG. NO.	REV
D	LAY-27502	FAB-27877	B

SCALE DO NOT SCALE DRAWING SHEET 1 OF 1