Product Brief

MPC565PB/D
Rev. 3, 2/2003

MPC565/MPC566
Product Brief

MOTOROLA intelligence everywhere™ | digital dna™

This document provides an overview of the MPC565/MPC566 microcontrollers, including a block diagram showing the major modular components, sections that list the major features, and differences between the MPC565/MPC566 and the MPC555. The MPC565 and MPC566 devices are members of the Motorola MPC500 RISC Microcontroller family. The parts herein will be referred to only as MPC565 unless specific parts need to be referenced.

Table 1. MPC565/MPC566 Features

Device	Flash	Code Compression
MPC565	1 Mbyte	Code compression not supported
MPC566	1 Mbyte	Code compression supported

1 Introduction

The MPC565 device offers the following features:

- PowerPC™ core with a floating point unit (FPU) and a burst buffer controller (BBC)
- Unified system integration unit (USIU), a flexible memory controller, and improved interrupt controller
- 1 Mbyte of Flash memory (UC3F)
  - Typical endurance of 100,000 write/erase cycles @ 25ºC
  - Typical data retention of 100 years @ 25ºC
- 36 Kbytes of static RAM (two CALRAM modules)
  - 8 Kbytes of normal access or overlay access (sixteen 512-byte regions)
  - 4 Kbytes in CALRAM A, 4 Kbytes in CALRAM B
- Three time processor units (TPU3)
  - TPU3 A and TPU3 B are connected to DPTRAM AB (6 Kbytes)
  - TPU3 C is connected to DPTRAM C (4 Kbytes)
- A 22-timer channel modular I/O system (MIOS14)
  - Same as MIOS1 plus a real-time clock sub-module (MRTCSM), 4 counter sub-modules (MCSM), and 4 PWM sub-modules (MPWMSM)
- Three TouCAN modules (TouCAN_A, TouCAN_B, and TouCAN_C)
- Two enhanced queued analog to digital converters (QADC64E A, QADC64E B) with analog multiplexers (AMUX) for 40 total analog channels. These modules are configured so each module can access all 40 of the analog inputs to the part.

Freescale Semiconductor, Inc.

- Two queued serial multi-channel modules (QSMCM A, QSMCM B), each of which contains a queued serial peripheral interface (QSPI) and two serial controller interfaces (SCI/UART)
- -40°C – 125°C ambient temperature, -40°C – 85°C for suffix C devices, -55°C– 125°C for suffix A devices
- Debug features:
  - A J1850 (DLCMD2) communications module
  - A Nexus debug port (class 3) – IEEE-ISTO 5001-1999
  - JTAG and background debug mode (BDM)
- Packaging and Electrical

1.1 Block Diagram

Figure 1 is a block diagram of the MPC565.

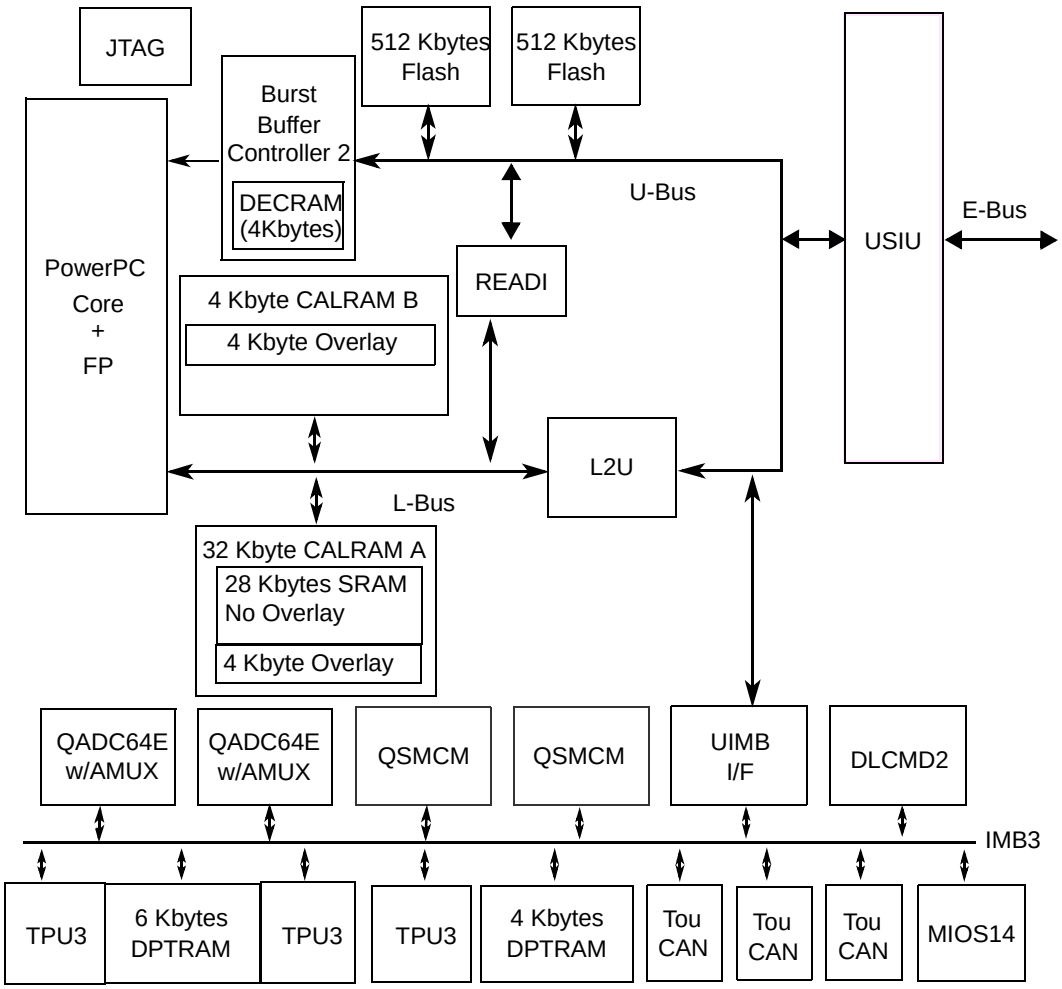

Figure 1. MPC565 Block Diagram

For More Information On This Product,
Go to: www.freescale.com

Freescale Semiconductor, Inc.

1.2 Detailed Feature List

The MPC565 key features are explained in the following sections.

1.2.1 High Performance CPU System

- Fully static design
- Four major power saving modes
  - On, doze, sleep, deep-sleep and power-down

1.2.2 RISC MCU Central Processing Unit (RCPU)

- High-performance core
  - PowerPC single issue integer core
  - Precise exception model
  - Floating point
  - Code compression (MPC566 only)
    - Compression reduces usage of internal or external Flash memory
    - Compression optimized for automotive (non-cached) applications
    - New compression scheme decreases code size to 40% –50% of source

1.2.3 MPC500 System Interface (USIU)

- MPC500 system interface (USIU, BBC, L2U)
- Periodic interrupt timer, bus monitor, clocks, decrementer and time base
- Clock synthesizer, power management, reset controller
- External bus tolerates 5-V inputs, provides 2.6-V outputs
- Enhanced interrupt controller supports a separate interrupt vector for up to eight external and 40 internal interrupts
- IEEE 1149.1 JTAG test access port
- Bus supports multiple master designs
- USIU supports dual-mapping of Flash to move part of internal Flash memory to external bus for development
- External bus, supporting non-wraparound burst for instruction fetches, with up to 8 instructions per memory cycle

1.2.4 Burst Buffer Controller (BBC) Module

- Exception vector table relocation features allow exception table to be relocated to following locations:
  - 0x0000 0000 - 0x0000 1FFF (normal MPC500 exception table location)
  - 0x0001 0000 - 0x0001 1FFF (0 + 64 Kbytes; second page of internal Flash)
  - Second internal Flash module
  - Internal SRAM
  - 0x0FFF_0100 (external memory space; normal MPC500 exception table location)

For More Information On This Product,
Go to: www.freescale.com

Freescale Semiconductor, Inc.

1.2.5 Flexible Memory Protection Unit

- Flexible memory protection units in BBC (IMPU) and L2U (DMPU)
- Default attributes available in one global entry
- Attribute support for speculative accesses

1.2.6 Memory Controller

- Flexible chip selects via memory controller
- 24-bit address and 32-bit data buses
- 4- to 16-Mbyte (data) or 4-Gbyte (instruction) region size support
- Four-beat transfer bursts, two-clock minimum bus transactions
- Use with SRAM, EPROM, Flash and other peripherals
- Byte selects or write enables
- 32-bit address decodes with bit masks
- Four instruction regions
- Four data regions

1.2.7 1 Mbyte of CDR3 Flash EEPROM Memory (UC3F)

- 1 Mbyte Flash
  - Two UC3F modules, 512 Kbytes each
- Page mode read
- Block (64-Kbyte) erasable
- External 4.75- to 5.25-V VPP program and erase power supply
- Typical endurance of 100,000 write/erase cycles @ 25ºC
- Typical data retention of 100 years @ 25ºC

1.2.8 36-Kbyte Static RAM (CALRAM)

- 36-Kbyte static calibration RAM
  - Composed of 4-Kbyte and 32-Kbyte CALRAM modules
- Fast access: one clock
- Keep-alive power
- Soft defect detection (SDD)
- 4 Kbyte calibration (overlay) RAM per module (8 Kbytes total)
- Eight 512-byte overlay regions per module (16 regions total)

1.2.9 General Purpose I/O Support (GPIO)

- General-purpose I/O support
- Address (24) and data (32) pins can be used as GPIO in single-chip mode
- 16 GPIO in MIOS14
- Many peripheral pins can be used as GPIO when not used as primary functions
- 5-V outputs with slew rate control

For More Information On This Product,
Go to: www.freescale.com

Freescale Semiconductor, Inc.

1.2.10 Debug Features

- Extensive system debug support
- On-chip watchpoints and breakpoints
- Program flow tracking
- Background debug mode (BDM)

1.2.10.1 Nexus Debug Port (Class 3)

- Nexus/IEEE – ISTO 5001-1999 debug port (Class 3)
- Nine- or 16-pin interface

1.2.10.2 Message Data Link Controller (DLCMD2) Module

- Two pins muxed with QSMCMB pins. Muxing controlled by QSMCMB PCS3 pin assignment register
- SAE J1850 Class B data communications network interface compatible and ISO compatible for low-speed (<125 Kbps) serial data communications in automotive applications
- 10.4 Kbps variable pulse width (VPW) bit format
- Digital noise filter, collision detection
- Hardware cyclical redundancy check (CRC) generation and checking
- Block mode receive and transmit supported
- 4x receive mode supported (41.6 Kbps)
- Digital loopback mode
- In-frame response (IFR) types 0, 1, 2, and 3 supported
- Dedicated register for symbol timing adjustments
- Inter-module bus 3 (IMB3) slave interface
- Power-saving IMB3 stop mode with automatic wakeup on network activity
- Power-saving IMB3 CLOCKDIS mode
- Debug mode available through IMB3 FREEZE signal or user controllable SOFT_FRZ bit
- Polling and IMB3 interrupt generation with vector lookup available

1.2.11 Integrated I/O System

- True 5-V I/O

1.2.11.1 Time Processor Units (TPU3)

- Three time processing units (TPU3)
  - 16 channels each
- Each TPU3 is a microcoded timer subsystem
- One 6-Kbyte and one 4-Kbyte dual-port TPU RAM (DPTRAM), one (6-Kbyte) shared by two TPU3 modules for TPU microcode and the 4-Kbyte dedicated to the third TPU3 for microcode.

Freescale Semiconductor, Inc.

For More Information On This Product,
Go to: www.freescale.com

1.2.11.2 22-Channel Modular I/O System (MIOS14)

- 22-channel MIOS timer (MIOS14)
- Six modulus counter submodules (MCSM)
  - Four additional MCSM submodules compared to MIOS1
- 10 double action submodules (DASM).
- 12 dedicated PWM submodules (PWMSM)
  - Four additional PWM submodules compared to MIOS1 (shared with MIOS GPIO pins)
- MIOS real-time clock submodule (MRTCSM) provides low power clock/counter
  - Requires external 32-KHz crystal
  - Uses four pins: two for 32-KHz crystal, two for power/ground.

1.2.12 Two Enhanced Queued Analog-to-Digital Converter Modules (QADC64E)

- Two enhanced queued analog to digital converters (QADC64E A, QADC64E B) with AMUXes for 40 total analog channels.
- 10 bit A/D converter with internal sample/hold
  - Typical conversion time is 4 µs (250-Kbyte samples/sec)
  - Two conversion command queues of variable length
- Automated queue modes initiated by:
  - External edge trigger/level gate
  - Software command
  - Periodic/interval timer, assignable to both queue 1 and 2
- 64 result registers in each QADC64E module
  - Output data is right or left justified, signed or unsigned
- Synchronized clock mode allows both QADC64Es to see the same conversion clock. This allows the two modules to look like one large QADC with four queues.
- Conversions alternate reference (ALTREF) pin. This pin can be connected to a different reference voltage

1.2.13 Three CAN 2.0B Controller (TouCAN) Modules

- Three TouCAN modules (TouCAN_A, TouCAN_B, and TouCAN_C)
- 16 message buffers each, programmable I/O modes
- Maskable interrupts
- Programmable loopback for self-test operation
- Independent of the transmission medium (external transceiver is assumed)
- Open network architecture, multimaster concept
- High immunity to EMI
- Short latency time for high-priority messages
- Low power sleep mode, with programmable wake up on bus activity
- TouCAN_C pins shared with MIOS14 GPIO pins

For More Information On This Product,
Go to: www.freescale.com

Freescale Semiconductor, Inc.

1.2.14 Queued Serial Multi-Channel Modules (QSMCM)

- Two queued serial modules with one queued-SPI and two SCI each (QSMCM_A, QSMCM_B)
  - QSMCM_A matches full MPC555 QSMCM functionality
  - QSMCM_B has pins muxed with DLCMD2 module
    - Two pins are muxed with DLCMD2 (J1850) transmit and receive pins (B_PCS3_J1850_TX and B_RXD2_J1850_RX)
    - QSMCM B vs J1850 mux control provided by QPAPCS3 bit in QSMCM pin assignment register (PQSPAR)
- Queued-SPI
  - Provides full-duplex communication port for peripheral expansion or interprocessor communication
  - Up to 32 preprogrammed transfers, reducing overhead
  - Synchronous serial interface with baud rate of up to system clock / 4
  - Four programmable peripheral-select pins support up to 16 devices
  - Special wrap-around mode allows continuous sampling of a serial peripheral for efficient interfacing to serial analog-to-digital (A/D) converters
- SCI
  - UART mode provides NRZ format and half- or full-duplex interface
  - 16 register receive buffer and 16 register transmit buffer on one SCI
  - Advanced error detection, and optional parity generation and detection
  - Word length programmable as 8 or 9 bits
  - Separate transmitter and receiver enable bits, and double buffering of data
  - Wake-up functions allow the CPU to run uninterrupted until either a true idle line is detected, or a new address byte is received

1.2.15 Electrical Specifications and Packaging

- 40 MHz operation (56 MHz operation is optional for the MPC566)
- -40°C – 125°C ambient temperature, -40°C – 85°C for suffix C device, -55°C– 125°C for suffix A devices
- 2.6 V ± 0.1 V external bus
  - External bus is compatible with external memory devices operating from 2.5 V to 3.4 V.
  - Extended voltage range (2.7 – 3.4 V) degrades data drive timing by 1.1 ns on date writes.
- 2.6 ± 0.1 V internal logic
- 5-V I/O (5.0 ± 0.25 V)
- Available in package or bumped die
- Plastic ball grid array (PBGA) packaging
  - 388 ball PBGA
  - 27 mm x 27 mm body size
- 1.0 mm ball pitch

For More Information On This Product,
Go to: www.freescale.com

Freescale Semiconductor, Inc.

1.3 MPC565 Optional Features

The following features of the MPC565 are optional features and may not appear in certain configurations:

- 56-MHz operation (40-MHz is default)
- MPC566 supports code compression

2 Differences between the MPC565 and the MPC555

The MPC565 is an enhanced version of the MPC555. Most functional features of the MPC555 are unchanged on the MPC565. Table 2 shows the high level differences.

Table 2. Differences Between Modules of the MPC555 and the MPC565

Module	MPC555	MPC565
CPU Core	No Change	
BBC	BBC	BBC with improved code compression [1]
L2U	No Change	
SRAM	26-Kbytes	36-Kbyte CALRAM with overlay features
Flash	448-Kbyte CMF	1-Mbyte UC3F (new programming, etc.)
USIU	USIU	USIU with enhanced interrupt controller
JTAG	No Change	
READI	None	New Module
UIMB	No Change	
QADC64	2 QADC64 (16 channels on each QADC for 32 total channels)	2 QADC64E w/AMUXes (40 channels accessible from either QADC64E)
QSMCM	(1) No Change (2)	
DLCMD2 (J1850)	None	1
MIOS	MIOS1	MIOS14: MIOS1 with real-time clock (MRTCSM), 4 more PWMSMs and 4 more MCSMs
TouCAN	(2) No Change (3)	
TPU3	(2) No Change (3)	
DPTRAM	(6-Kbytes) No Change (6-Kbytes, 4-Kbytes)	
Power Supplies		
—	40 MHz with two power supplies: nominal 3.3-V to 5.0-V power supplies	56 MHz with two power supplies: 5.0-V I/O, 2.6-V internal logic

[1] Available on some options.

For More Information On This Product,
Go to: www.freescale.com

Freescale Semiconductor, Inc.

2.1 Additional MPC565 Differences

The following are additional differences between the MPC555 and the MPC565.

- SPI (MISO, MOSI, and SCK) pin drive.
  - MPC565 provides 21-ns rise/fall with 200-pf load using CMOS (20%/70%) levels
- GPIO on MODCK1 pin outputs only 2.6 V
  - MODCK1 pin is in keep-alive power section with no 5-V rail available
  - 5.0-V compatibility modes
    - Input is 5-V friendly
    - 2.6-V output has less slew rate control
    - 2.6-V: VOH = 2.3 V
- Power supplies for external bus pins
  - QVDDL is quiet supply to hold non-switching outputs quiet even when noisy supply (NVDDL) sags
  - QVDDL supplies pre-drive and other pad logic
  - NVDDL only supplies final PMOS driver stage
  - QVDDL and NVDDL shorted on customer board after filtering
- Pull-up and pull-down changes during PORESET and HRESET
  - All 2.6-V/5-V pads (external bus: address/data/control) pull down at reset
  - All 5-V pads pull up at reset
  - Additional control granularity in the PDMCR register
- No pull-ups on QSMCM SCI receive pads
- A_RXD1_QGPI1, A_RXD2_QGPI2, B_RXD1_QGPI1 pins do not have weak pull-up during reset or any other time
- CLKOUT has 3 drive strength options
  - Better matches drive to requirements to reduce EMI
  - 25, 50, 100 pf instead of 45 and 90 pf
- Change reset value of ENGCLK to maximum divide (crystal/128)
  - For a 4-MHz crystal, this is 31.25 KHz
    - ENGCLK is selectable between 2.6 V and 5 V
- A daisy chain between UC3F modules allows either module to provide the reset configuration word (RCW)
- Censorship operation
  - A RCW bit controls whether or not the entire UC3F can be erased while censorship is violated
- BBC SPRs (PPC regs) access in two clocks instead of one clock
- CALRAM internal protection block size is 8 Kbytes
  - Instead of 4 Kbytes on MPC555 LRAM
- CALRAM causes machine check exception instead of data storage interrupt (DSI) exception in certain cases
  - For non-overlay CPU core accesses, a DSI exception is taken
  - For overlay accesses and any non-core access (slave mode), a machine check exception is taken

For More Information On This Product,
Go to: www.freescale.com

Freescale Semiconductor, Inc.

- CALRAM causes DSI exception only if the data relocation (DR) bit in the core machine state register, MSR[DR], is set.
  - L2U on MPC555 already followed this protocol, but the LRAM did not. Now all L-bus peripherals follow this protocol.
  - The MSR[DR] bit is described in the reference manual for more information.
- Four additional PRDS control bits were added to the USIU to allow more granularity of PRDS control on a part
- BBC includes a 4-Kbyte DECRAM that can be used if compression is not used or is not available.

3 SRAM Keep-Alive Power Behavior

The SRAM has three keep-alive power pins (VDDSRAM1, VDDSRAM2, and VDDSRAM3). These pins provide keep-alive power to the SRAM arrays in the CALRAM modules and the DPTRAM modules.

The VDDSRAM1 pin powers the 32-Kbyte CALRAM A during keep-alive while power is off to the MPC565 (except for the keep-alive power supplies). CALRAM A keeps all of its 32 Kbytes powered during power down.

The VDDSRAM2 pin powers the 4-Kbyte CALRAM B module. The VDDSRAM3 pin powers the DPTRAM modules during keep-alive as well as during normal operation. The CALRAM modules only power their arrays from the VDDSRAM pins during keep-alive. During normal operation, they are powered by the normal internal VDD of the part.

The DPTRAM modules (6 Kbytes and 4 Kbytes) and the 4-Kbyte DECRAM in the BBC module power their arrays via the VDDSRAM3 pin during keep-alive and are supplied by VDD during normal operation.

4 MPC565 Memory Map

The internal memory map is organized as a single 4-Mbyte block. This is shown in Figure 3. This block can be moved to one of eight different locations. The internal memory space is divided into the following sections:

- Flash memory (1 Mbyte) — U-bus memory
- Static RAM memory (36 Kbytes CALRAM) — L-bus memory
- Control registers and IMB3 modules (64 Kbytes), partitioned as
  - USIU and flash control registers
  - UIMB interface and IMB3 modules
  - CALRAM and READI control registers (L-bus control register space)

The internal memory block can reside in one of eight possible 4-Mbyte memory spaces. These eight locations are the first eight 4-Mbyte memory blocks starting with address 0x0000 0000, as shown in Figure 2. There is a user programmable register in the USIU to configure the internal memory map to one of the eight possible locations. Programmability of internal memory map location allows multiple chip system.

The IMB3 address space block in Figure 3 shows memory allocation for IMB3 modules. It does not show the actual memory space required for individual modules. All modules are mapped to the low address, numerically, of the memory allocated for that module in the IMB3 address space.

For More Information On This Product,
Go to: www.freescale.com

Freescale Semiconductor, Inc.

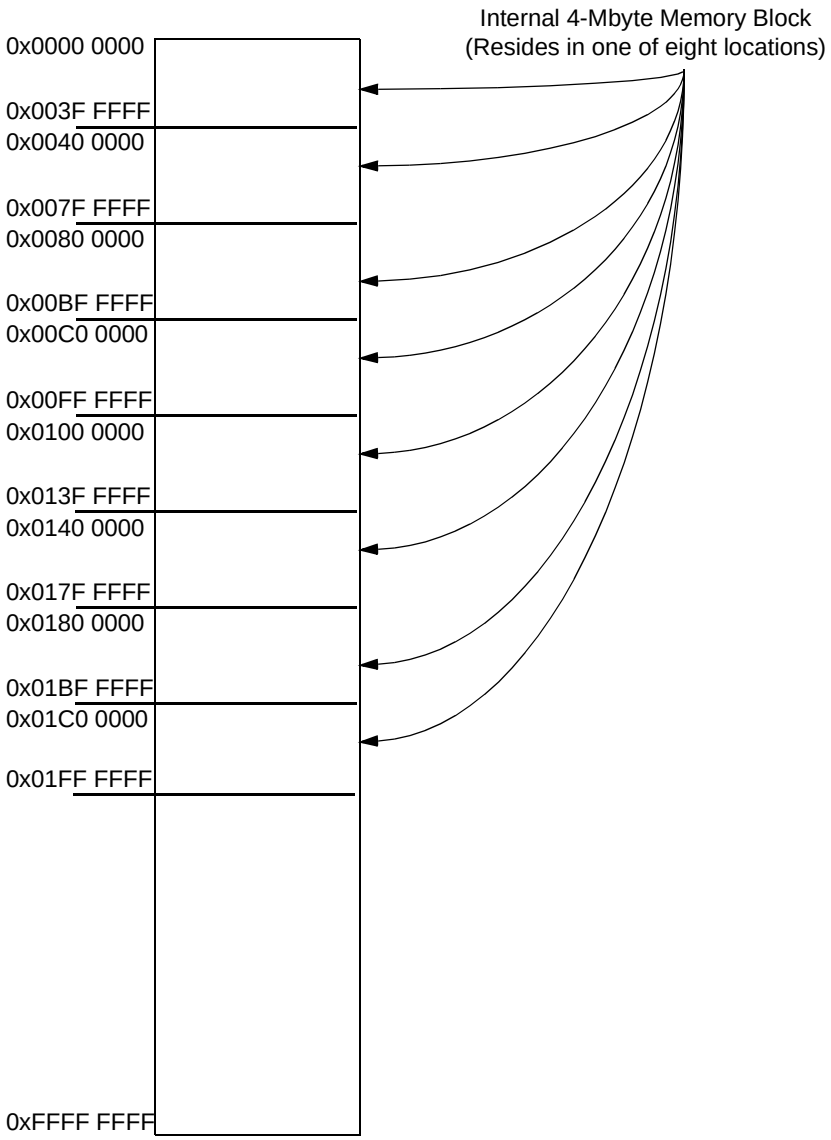

Figure 2. Memory Map

Freescale Semiconductor, Inc.

For More Information On This Product,
Go to: www.freescale.com

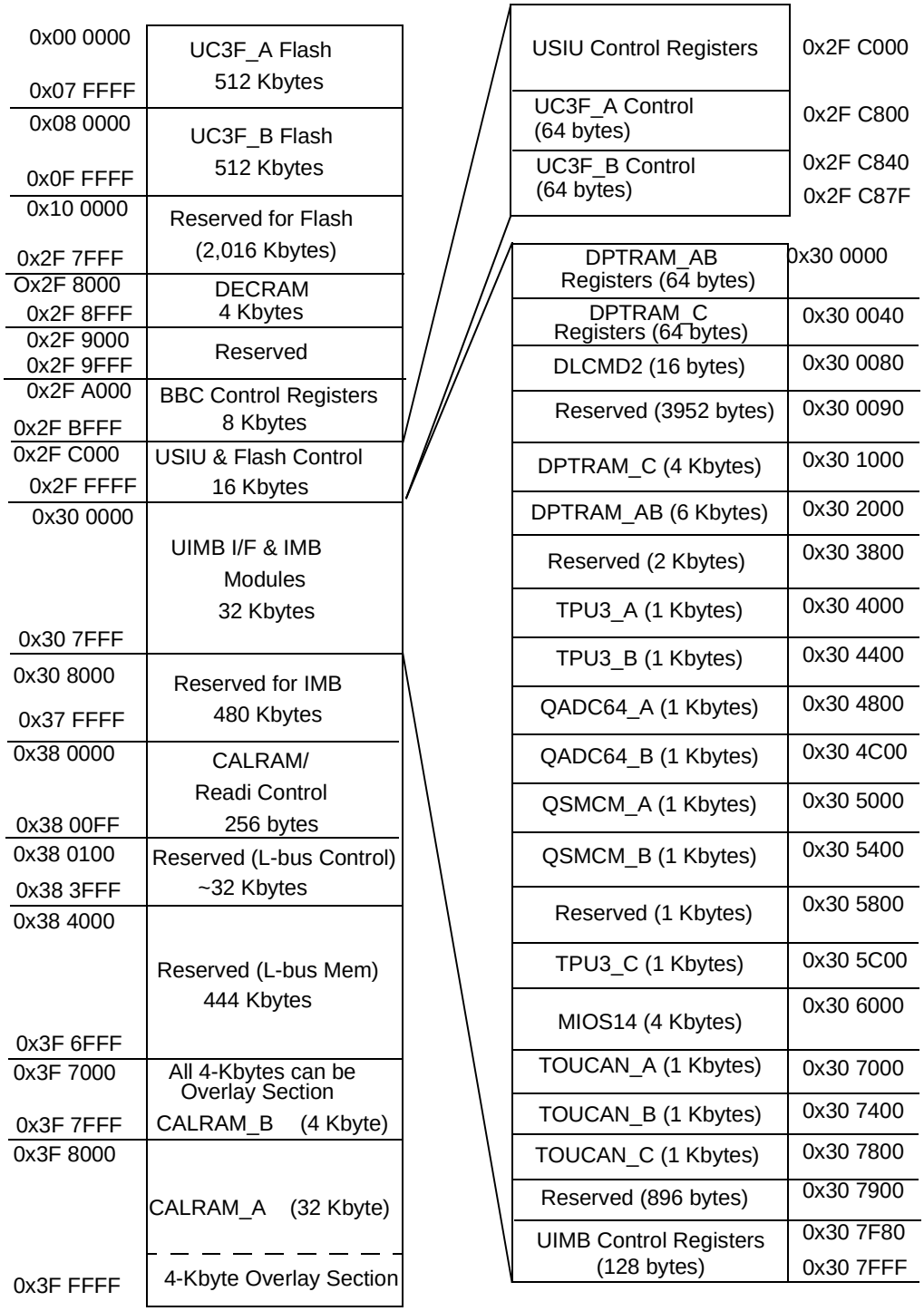

Figure 3. Internal Memory Block

For More Information On This Product,
Go to: www.freescale.com

Freescale Semiconductor, Inc.

5 MPC565 Pinout Diagram

Figure 4 shows the pinout for the MPC565.

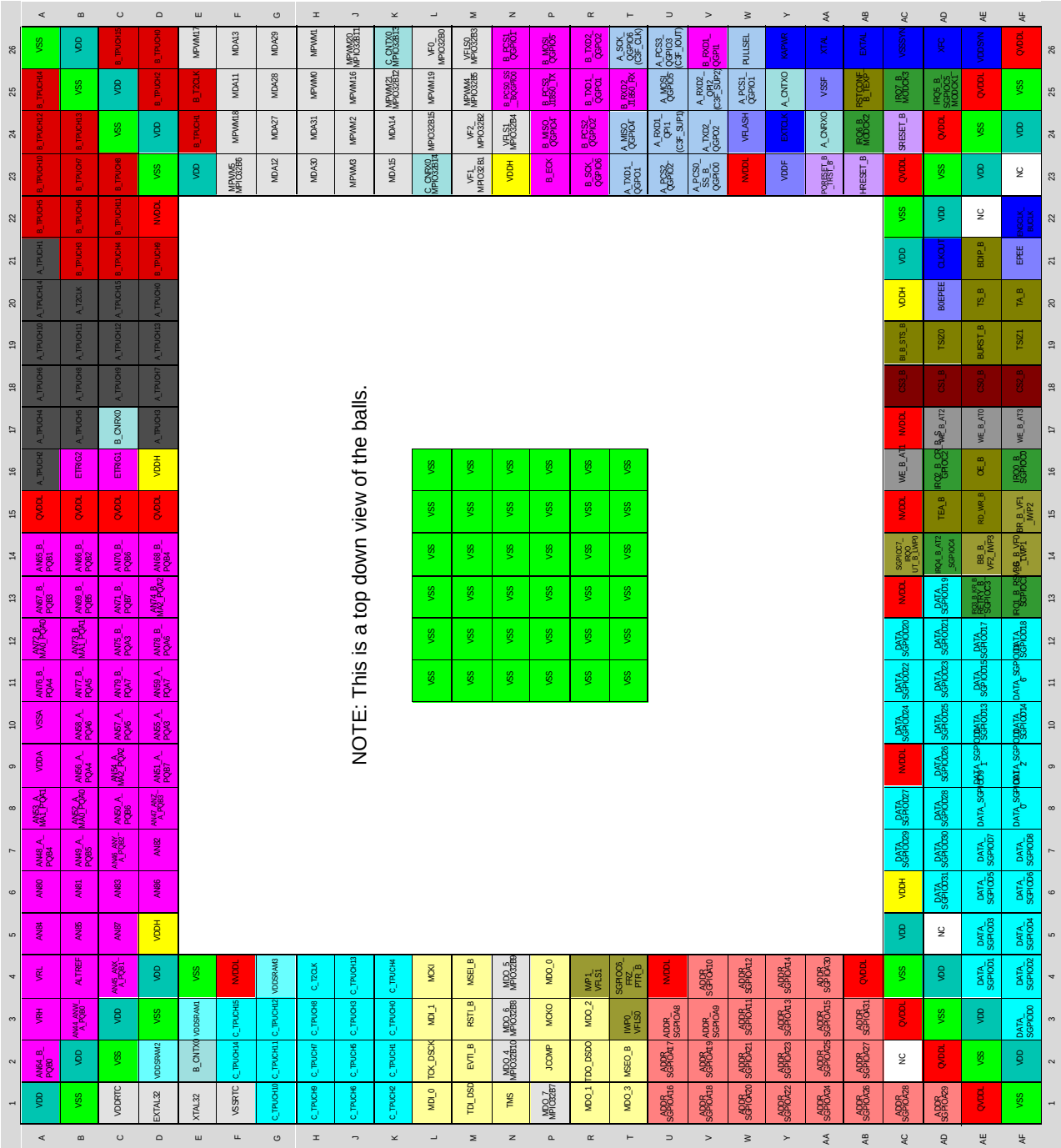

Figure 4. MPC565 Pinout Diagram

For More Information On This Product,
Go to: www.freescale.com

Freescale Semiconductor, Inc.

THIS PAGE INTENTIONALLY LEFT BLANK

Freescale Semiconductor, Inc.

For More Information On This Product,
Go to: www.freescale.com

THIS PAGE INTENTIONALLY LEFT BLANK

Freescale Semiconductor, Inc.

For More Information On This Product,
Go to: www.freescale.com

HOW TO REACH US:

USA/EUROPE/LOCATIONS NOT LISTED:

Motorola Literature Distribution
P.O. Box 5405, Denver, Colorado 80217
1-303-675-2140 or 1-800-441-2447

JAPAN:

Motorola Japan Ltd.
SPS, Technical Information Center
3-20-1, Minami-Azabu Minato-ku
Tokyo 106-8573 Japan
81-3-3440-3569

ASIA/PACIFIC:

Motorola Semiconductors H.K. Ltd.
Silicon Harbour Centre, 2 Dai King Street
Tai Po Industrial Estate, Tai Po, N.T., Hong Kong
852-26668334

TECHNICAL INFORMATION CENTER:

1-800-521-6274

HOME PAGE:

http://www.motorola.com/semiconductors

Information in this document is provided solely to enable system and software implementers to use Motorola products. There are no express or implied copyright licenses granted hereunder to design or fabricate any integrated circuits or integrated circuits based on the information in this document.

Motorola reserves the right to make changes without further notice to any products herein. Motorola makes no warranty, representation or guarantee regarding the suitability of its products for any particular purpose, nor does Motorola assume any liability arising out of the application or use of any product or circuit, and specifically disclaims any and all liability, including without limitation consequential or incidental damages. “Typical” parameters which may be provided in Motorola data sheets and/or specifications can and do vary in different applications and actual performance may vary over time. All operating parameters, including “Typicals” must be validated for each customer application by customer’s technical experts. Motorola does not convey any license under its patent rights nor the rights of others. Motorola products are not designed, intended, or authorized for use as components in systems intended for surgical implant into the body, or other applications intended to support or sustain life, or for any other application in which the failure of the Motorola product could create a situation where personal injury or death may occur. Should Buyer purchase or use Motorola products for any such unintended or unauthorized application, Buyer shall indemnify and hold Motorola and its officers, employees, subsidiaries, affiliates, and distributors harmless against all claims, costs, damages, and expenses, and reasonable attorney fees arising out of, directly or indirectly, any claim of personal injury or death associated with such unintended or unauthorized use, even if such claim alleges that Motorola was negligent regarding the design or manufacture of the part.

MOTOROLA

Motorola and the Stylized M Logo are registered in the U.S. Patent and Trademark Office. digital dna is a trademark of Motorola, Inc. The described product contains a PowerPC processor core. The PowerPC name is a trademark of IBM Corp. and used under license. All other product or service names are the property of their respective owners. Motorola, Inc. is an Equal Opportunity/Affirmative Action Employer.

© Motorola, Inc. 2003

MPC565PB/D

For More Information On This Product,
Go to: www.freescale.com

Freescale Semiconductor, Inc.