FXPS7115D4

Digital absolute pressure sensor, 40 kPa to 115 kPa

Rev. 3 — 5 December 2019 Product data sheet

1 General description

The FXPS7115D4 high-performance, high-precision barometric absolute pressure (BAP) sensor consists of a compact capacitive micro-electro-mechanical systems (MEMS) device coupled with a digital integrated circuit (IC) producing a fully calibrated digital output.

The sensor is based on NXP's high-precision capacitive pressure cell technology. The architecture benefits from redundant pressure transducers as an expanded quality measure. This sensor delivers highly accurate pressure and temperature readings through either a serial peripheral interface (SPI) or an inter-integrated circuit (I^2C) interface. The FXPS7115D4 uses either a 3.3 V or 5.0 V power supply. Furthermore, the sensor employs an on-demand digital self-test for the digital IC and the MEMS transducers.

The sensor operates over a pressure range of 40 kPa to 115 kPa and over a wide temperature range of −40 ºC to 130 ºC.

The sensor comes in an industry-leading 4 mm x 4 mm x 1.98 mm, restriction of hazardous substances (RoHS) compliant, high power quad flat no lead (HQFN) package[1] suitable for small PCB integration. Its AEC-Q100[2] compliance, high accuracy, reliable performance, and high media resistivity make it ideal for use in automotive, industrial, and consumer applications.

2 Features and benefits

- Absolute pressure range: 40 kPa to 115 kPa
- Operating temperature range: –40 °C to 130 °C
- Pressure transducer and digital signal processor (DSP)
  - Digital self-test
- I^2C compatible serial interface
  - Slave mode operation
  - Standard mode, fast mode, and fast-mode plus support
- 32-bit SPI compatible serial interface
  - Sensor data transmission commands
    - 12-bit data for absolute pressure
    - 8-bit data for temperature
    - 2-bit basic status and 2-bit detailed status fields
    - 3, 4, or 8-bit configurable CRC
- Capacitance to voltage converter with anti-aliasing filter
- Sigma delta ADC plus sinc filter
- 800 Hz or 1000 Hz low-pass filter for absolute pressure
- Lead-free, 16-pin HQFN, 4 mm x 4 mm x 1.98 mm package

3 Applications

3.1 Automotive

- Engine management digital BAP
- Small engine control

3.2 Industrial

- Compressed air
- Manufacturing line control
- Gas metering
- Weather stations

3.3 Medical/Consumer

- Blood pressure monitor
- Medicine dispensing systems
- White goods

4 Ordering information

Table 1. Ordering information

Type number	Package		
	Name	Description	Version
FXPS7115DI4 FXPS7115DS4	HQFN16	HQFN16, plastic, thermal enhanced quad flat pack; no leads; 16 terminals; 0.8 mm pitch; 4 mm x 4 mm x 1.98 mm body	SOT1573-1

4.1 Ordering options

Table 2. Ordering options

Device	Range [kPa]	Packing	Interface	Temperature range
FXPS7115DI4T1	40 kPa to 115 kPa	Tape and reel	I^2C	–40 °C to 130 °C
FXPS7115DS4T1	40 kPa to 115 kPa	Tape and reel	SPI	–40 °C to 130 °C

All information provided in this document is subject to legal disclaimers.

© NXP B.V. 2019. All rights reserved.

5 Block diagram

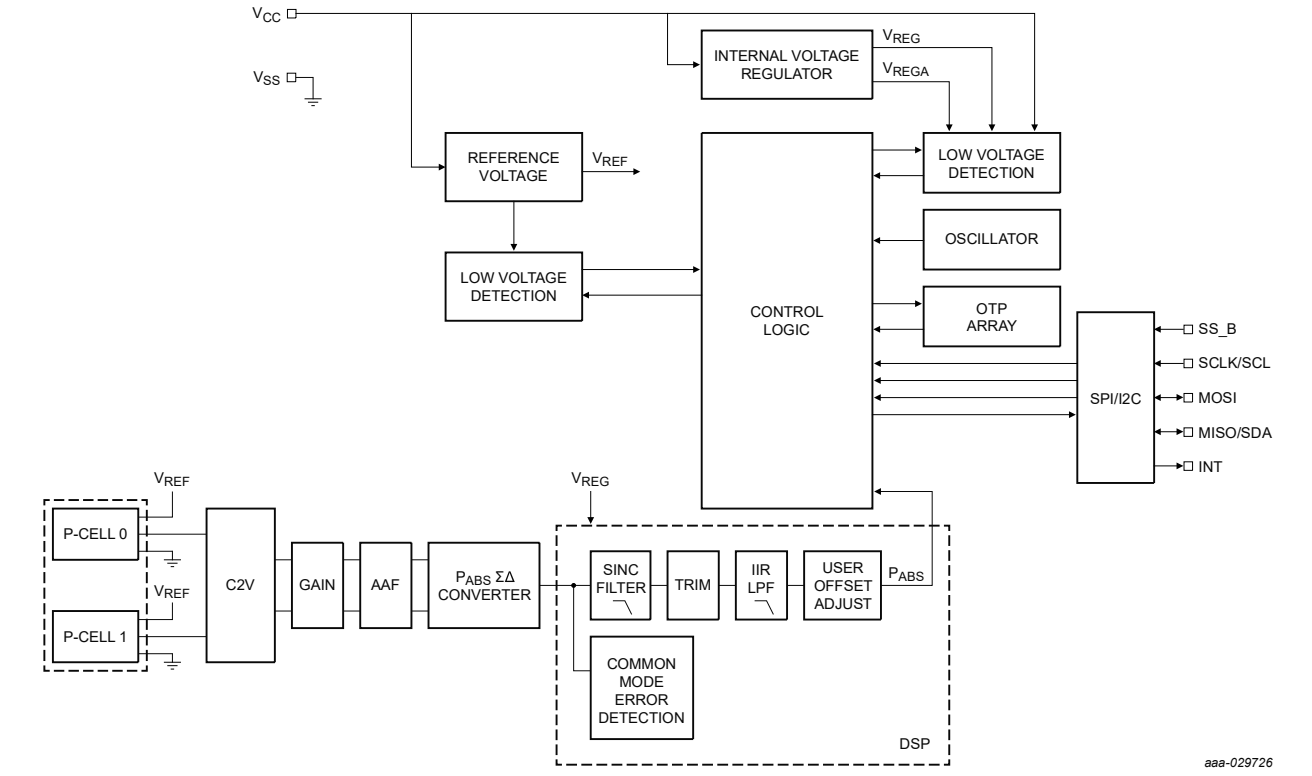

Figure 1. Block diagram of FXPS7115D4

6 Pinning information

6.1 Pinning

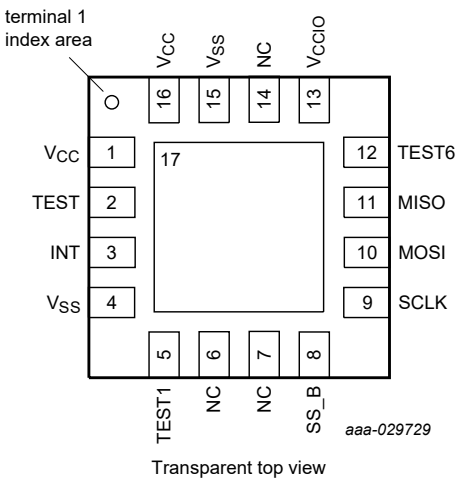

Figure 2. Pin configuration for 16-pin HQFN

All information provided in this document is subject to legal disclaimers.

© NXP B.V. 2019. All rights reserved.

6.2 Pin description

Table 3. Pin description

Pin	Pin name	Description
3	INT	Interrupt output The output can be configured to be active low or active high. If unused, NXP recommends pin 3 be unterminated. Optionally, pin 3 can be tied to V_{SS}.
1, 16	V_{CC}	Power supply
4, 15	V_{SS}	Supply return (ground)
2, 5, 12	TESTx	Test pin NXP recommends pins 2, 5, and 12 be unterminated. Optionally, these pins can be tied to V_{SS}
6, 7, 14	NC	No connect
8	SS_B	Slave / Device select In I^2C mode, input pin 8 must be connected to V_{CC} with an external pull-up resistor, as shown in the application diagram. In SPI mode, input pin 8 provides the slave select for the SPI port. An internal pull-up device is connected to this pin.
9	SCLK/SCL	In I^2C mode, input pin 9 provides the serial clock. This pin must be connected to V_{CC} with an external pull-up resistor, as shown in the application diagram. In SPI mode, input pin 9 provides the serial clock. An internal pull-down device is connected to this pin.
10	MOSI	SPI data in In SPI mode, pin 10 functions as the serial data input to the SPI port. An internal pull-down device is connected to this pin.
11	MISO/SDA	SPI/I^2C data out In I^2C mode, pin 11 functions as the serial data input/output. Pin 11 must be connected to V_{CC} with an external pull-up resistor, as shown in the application diagram. In SPI mode, pin 11 functions as the serial data output.
13	V_{CCIO}	I/O supply Pin 13 must be connected to V_{CC}, the device supply.
17	PAD	Die attach pad Pin 17 is the die attach flag, and must be connected to V_{SS}.

7 Functional description

7.1 Voltage regulators

The device derives its internal supply voltage from the V_{CC} and V_{SS} pins. An external filter capacitor is required for V_{CC}, as shown in Figure 25 and Figure 26.

A reference generator provides a reference voltage for the ΣΔ converter.

All information provided in this document is subject to legal disclaimers.

© NXP B.V. 2019. All rights reserved.

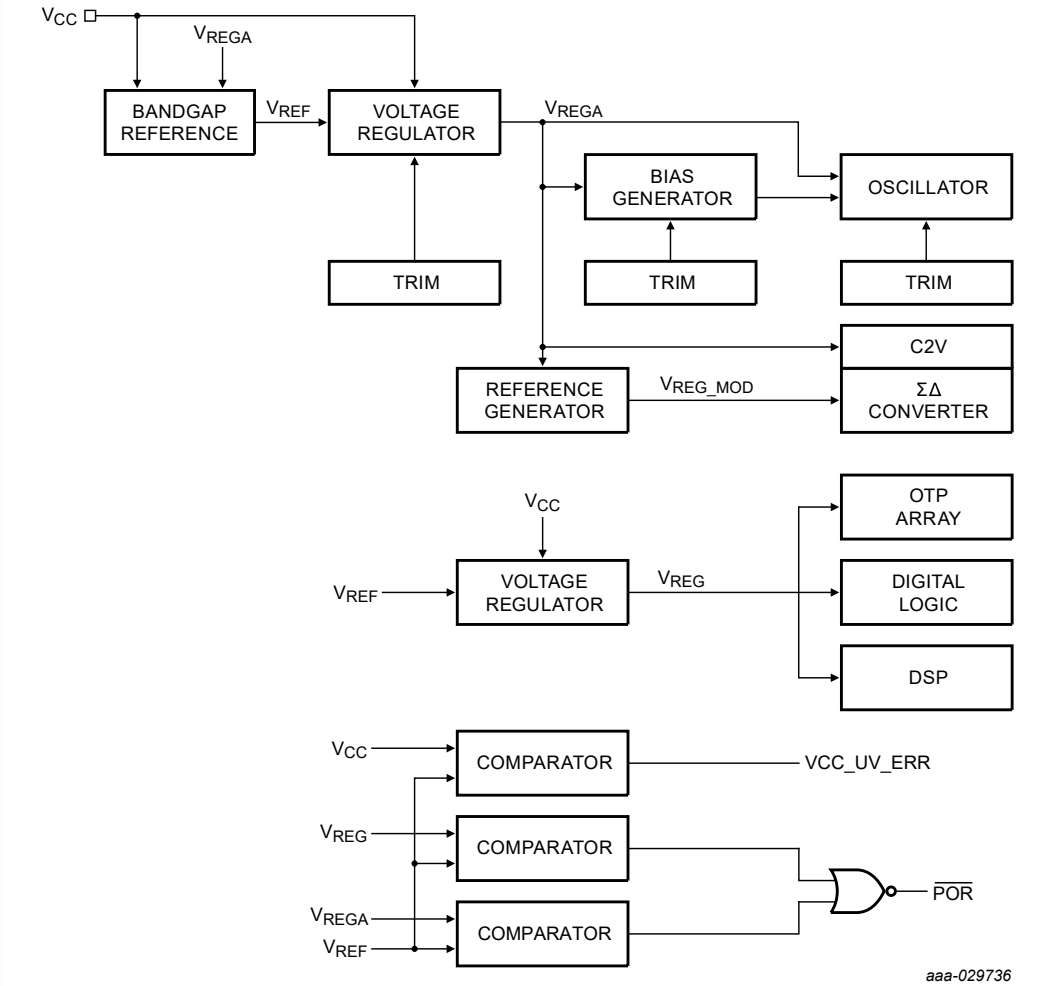

Figure 3. Voltage regulation and monitoring

7.1.1 V_{CC}, V_{REG}, V_{REGA}, undervoltage monitor

A circuit is incorporated to monitor the V_{CC} supply voltage and the internally regulated voltages V_{REG} and V_{REGA}. If any of the voltages fall below the specified undervoltage thresholds in Table 101, SPI and I^2C transactions are terminated. Once the supply returns above the threshold, the device resumes responses.

7.2 Internal oscillator

The device includes a factory trimmed oscillator as specified in Table 102.

7.3 Pressure sensor signal path

7.3.1 Transducer

See Table 101 and Table 102 for transducer parameters.

All information provided in this document is subject to legal disclaimers.

© NXP B.V. 2019. All rights reserved.

7.3.2 Self-test functions

The device includes analog and digital self-test functions to verify the functionality of the transducer and the signal chain. The self-test functions are selected by writing to the ST_CTRL[3:0] bits in the DSP_CFG_U1 register. The ST_CTRL bits select the desired self-test connection.

Once the ENDINIT bit is set, the ST_CTRL bits are forced to '0000'. Future writes to the ST_CTRL bits are disabled until a device reset.

7.3.2.1 P_{ABS} common mode verification

When the P_{ABS} common mode self-test is selected, the ST_ACTIVE bit is set, the ST_ERROR is cleared, and the device begins an internal measurement of the common mode signal of the P-cells and compares the result against a predetermined limit. If the result exceeds the limit, the ST_ERROR bit is set. The P_{ABS} common mode self-test repeats continuously every t_{ST_INIT} when the ST_CTRL bits are set to the specified value. Once the test is disabled, the ST_ERROR bit updates with the final test result within t_{ST_INIT} of disabling the test. The ST_ACTIVE bit remains set until the final test result is reported. Figure 4 is an example of a user-controlled self-test procedure.

All information provided in this document is subject to legal disclaimers.

© NXP B.V. 2019. All rights reserved.

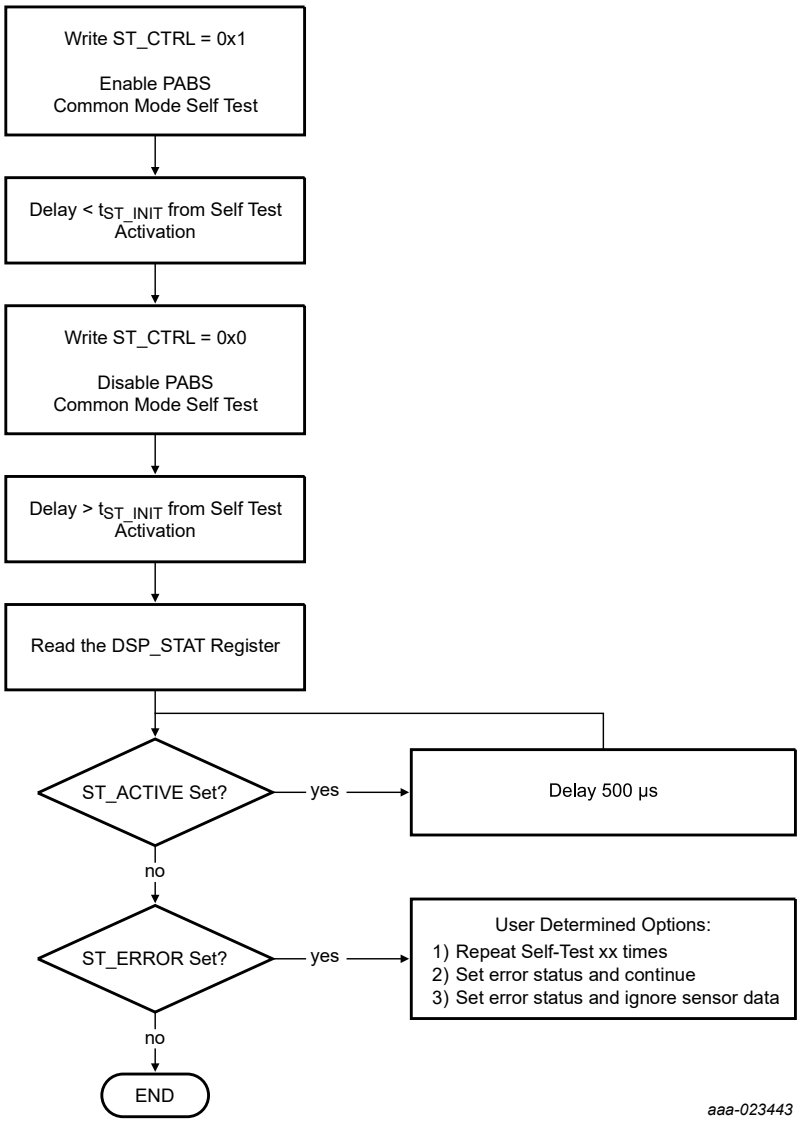

Figure 4. User-controlled P_{ABS} common mode self-test flowchart

7.3.2.2 Startup digital self-test verification

Four unique fixed values can be forced at the output of the sinc filter by writing to the ST_CTRL bits as shown in Table 4. The digital self-test values result in a constant value at the output of the signal chain. After a specified time period, the SNS_DATAx register value can be verified against the specified values in the table below. The values listed below are for the P_{ABS} signal. When any of these self-test functions are selected, the ST_ACTIVE bit is set. These signals can only be selected when the ENDINIT bit is not set.

All information provided in this document is subject to legal disclaimers.

© NXP B.V. 2019. All rights reserved.

Table 4. Self-test control register

ST_CTRL[3]	ST_CTRL[2]	ST_CTRL[1]	ST_CTRL[0]	Function	SNS_DATAx register contents
1	1	0	0	Digital self-test #1	8171h
1	1	0	1	Digital self-test #2	6C95h
1	1	1	0	Digital self-test #3	807Ah
1	1	1	1	Digital self-test #4	78ACh

7.3.2.3 Startup sense data fixed value verification

Four unique fixed values can be forced to the SNS_DATAX_x registers by writing to the ST_CTRL bits as shown in Table 5. When any of these values are selected, the ST_ACTIVE bit is set. These signals can only be selected when the ENDINIT bit is not set.

Table 5. Self-test control bits for sense data fixed value verification

ST_CTRL[3]	ST_CTRL[2]	ST_CTRL[1]	ST_CTRL[0]	Function	SNS_DATAx register contents
0	1	0	0	DSP write to SNS_DATAx_X registers inhibited.	0000h
0	1	0	1	DSP write to SNS_DATAx_X registers inhibited.	AAAAh
0	1	1	0	DSP write to SNS_DATAx_X registers inhibited.	5555h
0	1	1	1	DSP write to SNS_DATAx_X registers inhibited.	FFFFh

7.3.3 ΣΔ converter

A second order sigma delta modulator converts the voltage from the analog front end to a data stream that is input to the DSP. A simplified block diagram is shown in Figure 5.

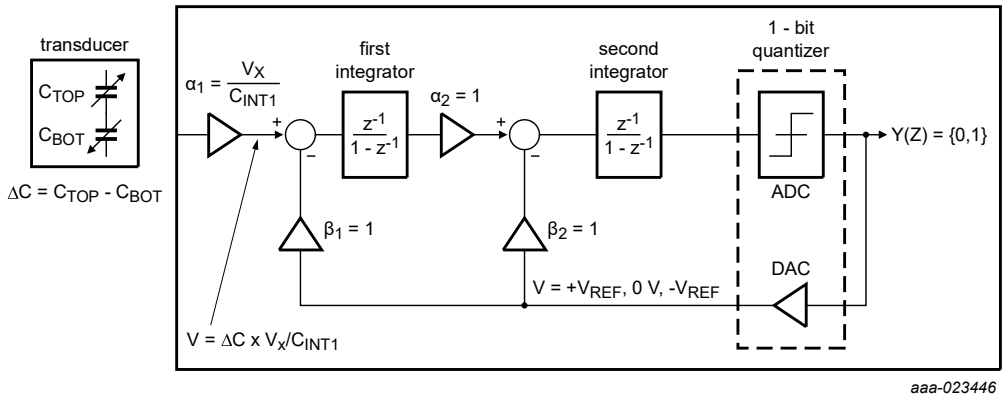

Figure 5. ΣΔ converter block diagram

The sigma delta modulator operates at a frequency of 1 MHz, with the transfer function in Equation 1.

$$H(Z) = \frac{\alpha_1}{Z^2} \quad (1)$$

All information provided in this document is subject to legal disclaimers.

© NXP B.V. 2019. All rights reserved.

7.3.4 Digital signal processor (DSP)

A DSP is used to perform signal filtering and compensation. A diagram illustrating the signal processing flow within the DSP is shown in Figure 6.

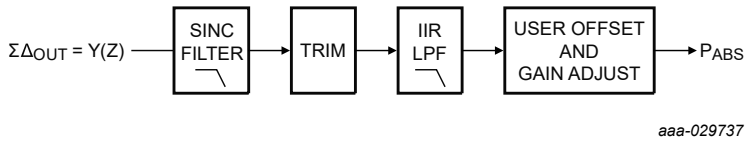

Figure 6. Signal chain diagram

7.3.4.1 Decimation sinc filter

In Equation 2, the output of the ΣΔ modulator is decimated and converted to a parallel value by two third-order sinc filters; the first with a decimation ratio of 24 and the second with a decimation ratio of 4.

$$H(Z) = \left(\frac{1}{24^3}\right) \times \left(\frac{1 - Z^{-24}}{1 - Z^{-1}}\right)^3 \quad H(Z) = \left(\frac{1}{4^3}\right) \times \left(\frac{1 - Z^{-4}}{1 - Z^{-1}}\right)^3 \tag{2}$$

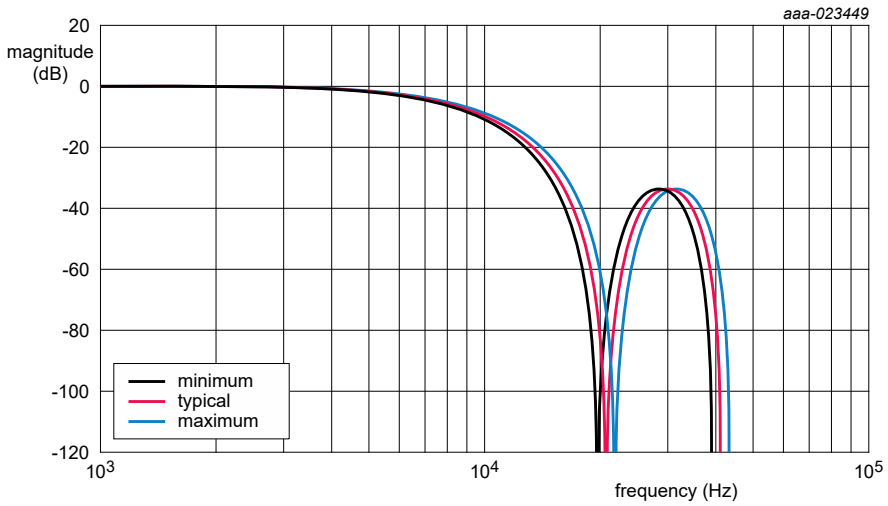

Figure 7. Sinc filter response

7.3.4.2 Signal trim and compensation

The device includes digital trim to compensate for sensor offset, sensitivity, and nonlinearity over temperature.

7.3.4.3 Low-pass filter

Data from the sinc filter is processed by an infinite impulse response (IIR) low-pass filter with the transfer function and coefficients shown in Equation 3.

$$H(Z) = a_0 \times \frac{(n_{11} \times z^0) + (n_{12} \times z^{-1}) + (n_{13} \times z^{-2})}{(d_{11} \times z^0) + (d_{12} \times z^{-1}) + (d_{13} \times z^{-2})} \times \frac{(n_{21} \times z^0) + (n_{22} \times z^{-1}) + (n_{23} \times z^{-2})}{(d_{21} \times z^0) + (d_{22} \times z^{-1}) + (d_{23} \times z^{-2})} \tag{3}$$

All information provided in this document is subject to legal disclaimers.

© NXP B.V. 2019. All rights reserved.

Table 6. IIR low pass filter coefficients

Filter number	Typical –3 dB frequency	Filter order	Filter coefficients (24 bit)				Group delay (µs)	Typical attenuation @ 1000 Hz (dB)
1	800 Hz	4	a_0	0.088642612609670	—	—	418	4.95
			n_{11}	0.029638050039039	d_{11}	1		
			n_{12}	0.087543281056143	d_{12}	–1.422792640957290		
			n_{13}	0.029695285913601	d_{13}	0.511435253566960		
			n_{21}	0.250241278804809	d_{21}	1		
			n_{22}	0.499999767379068	d_{22}	–1.503329908017845		
			n_{23}	0.249758953816089	d_{23}	0.621996524706640		
2	1000 Hz	4	a_0	0.129604264748411	—	—	333	2.99
			n_{11}	0.043719804402508	d_{11}	1		
			n_{12}	0.087543281056143	d_{12}	–1.300502656562698		
			n_{13}	0.043823599710731	d_{13}	0.430106921311110		
			n_{21}	0.250296586927511	d_{21}	1		
			n_{22}	0.499999648540934	d_{22}	–1.379959571988366		
			n_{23}	0.249703764531484	d_{23}	0.555046257157745		

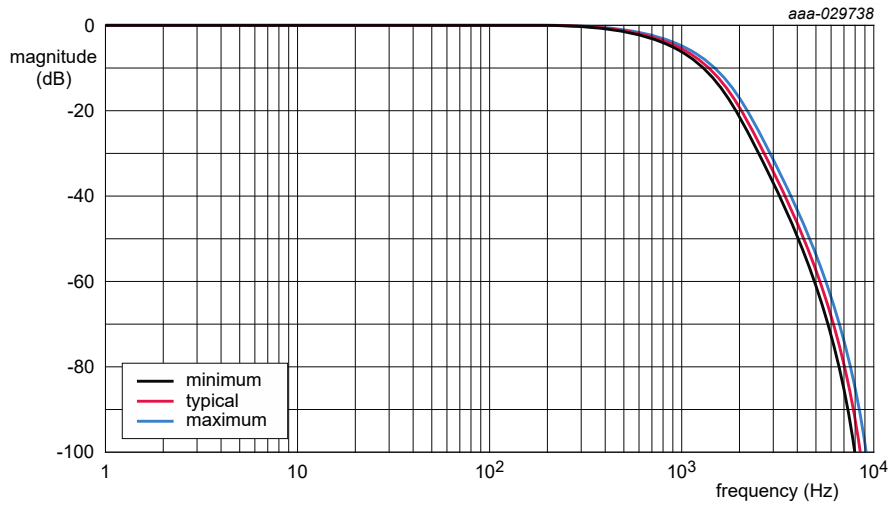

Figure 8. 800 Hz, 4-pole, low-pass filter response

All information provided in this document is subject to legal disclaimers.

© NXP B.V. 2019. All rights reserved.

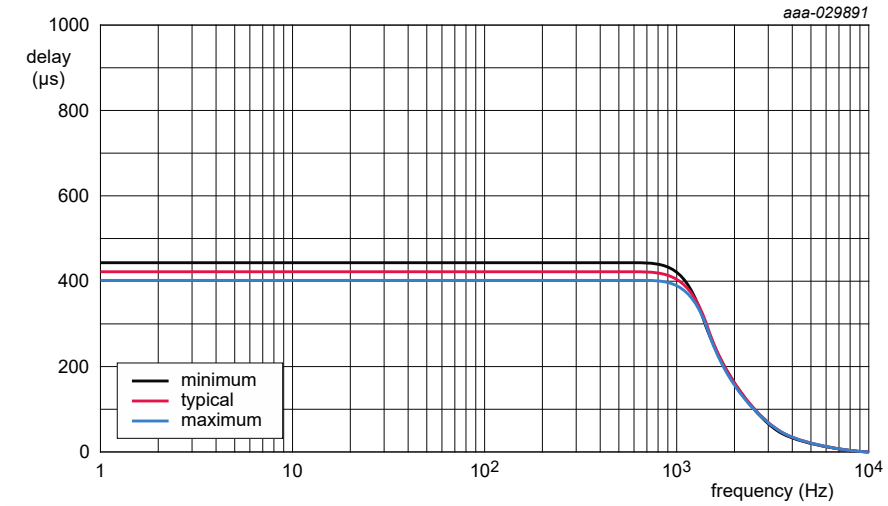

Figure 9. 800 Hz, 4-pole output signal delay

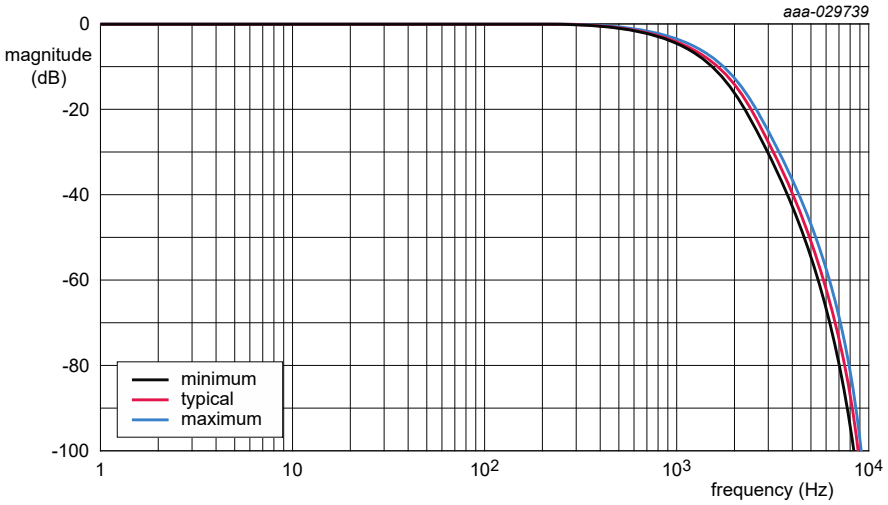

Figure 10. 1000 Hz, 4-pole, low-pass filter response

All information provided in this document is subject to legal disclaimers.

© NXP B.V. 2019. All rights reserved.

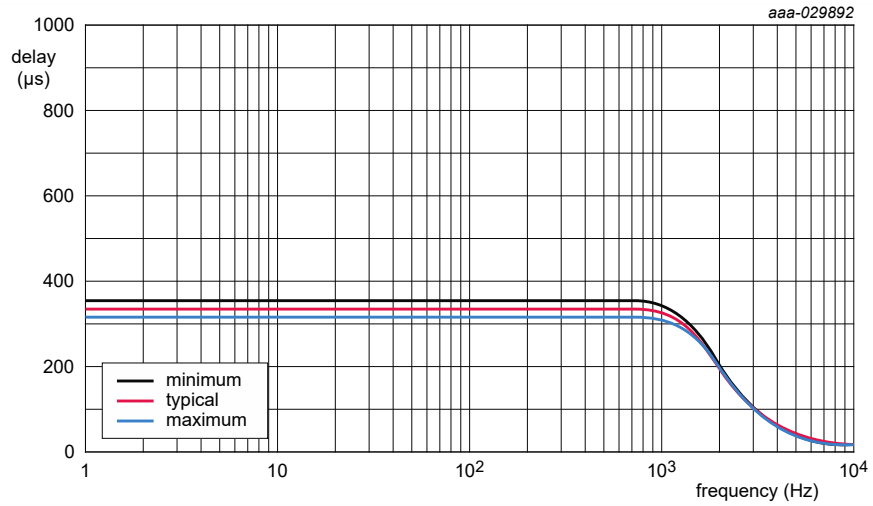

Figure 11. 1000 Hz, 4-pole output signal delay

7.3.4.4 Absolute pressure output data scaling equation

Equation 4 is used to convert absolute pressure readings with the variables as specified in the tables below. Note, the specified values apply only if the P_CAL_ZERO value is set to 0000h.

$$PABS_{kPa} = \frac{PABS_{LSB} - PABSOFF_{LSB}}{PABS_{SENSE}} \quad (4)$$

Where:

$PABS_{kPa}$ = The absolute pressure output in kPa
$PABS_{LSB}$ = The absolute pressure output in LSB
$PABSOFF_{LSB}$ = The internal trimmed absolute pressure output value at 0 kPa in LSB
$PABS_{SENSE}$ = The trimmed absolute pressure sensitivity in LSB/kPa

Range	Data reading	$PABSOff_{LSB}$ (LSB)	$PABS_{SENSE}$ (LSB/kPa)
40 - 115 kPa	12-bit output	–1566.6	34.98
	16-bit output	25538.8	69.96
	Interrupt threshold registers	25538	69.96
	P-zero calibration registers	0	69.96

7.3.5 Temperature sensor

7.3.5.1 Temperature sensor signal chain

The device includes a temperature sensor for signal compensation and user readability. Figure 12 shows a simplified block diagram. Temperature sensor parameters are specified in Table 101 and Table 102.

All information provided in this document is subject to legal disclaimers.

© NXP B.V. 2019. All rights reserved.

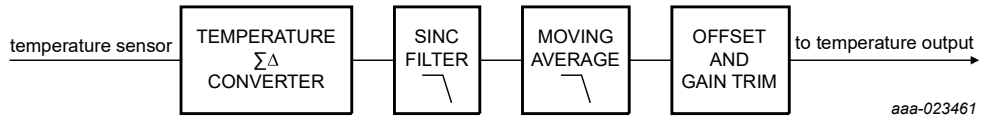

Figure 12. Temperature sensor signal chain block diagram

7.3.5.2 Temperature sensor output scaling equation

Equation 5 is used to convert temperature readings with the variables specified in Table 7.

$$T_{DEGC} = \frac{T_{LSB} - T0_{LSB}}{T_{SENSE}} \quad (5)$$

where:

T_{DEGC} = The temperature output in degrees C
T_{LSB} = The temperature output in LSB
$T0_{LSB}$ = The expected temperature output in LSB at 0 °C
T_{SENSE} = The expected temperature sensitivity in LSB/°C

Table 7. Temperature conversion variables

Data reading	$T0_{LSB}$ (LSB)	T_{SENSE} LSB/C)
8-bit register read	68	1

7.3.6 Common mode error detection signal chain

The device includes a continuous pressure transducer common mode error detection. A simplified block diagram is shown in Figure 13. The common mode error signal is compared against the normal absolute pressure signal. If the comparison falls outside of pre-determined limits, the CM_ERROR bit in the DSP_STAT register is set. Once the error condition is removed, the CM_ERROR bit is cleared as specified in Section 7.7.16 "DSP_STAT - DSP-specific status register (address 60h)".

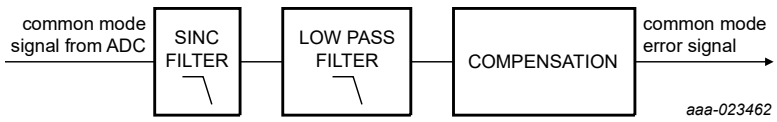

Figure 13. Common mode error detection signal chain block diagram

7.4 Inter-integrated circuit (I^2C) interface

The device includes an interface compliant to the NXP I^2C-bus specification[3]. The device operates in slave mode and includes support for standard mode, fast mode, and fast mode plus, although the maximum practical operating frequency for I^2C in a given system implementation depends on several factors including the pull-up resistor values and the total bus capacitance.

All information provided in this document is subject to legal disclaimers.

© NXP B.V. 2019. All rights reserved.

7.4.1 I²C bit transmissions

The state of SDA when SCL is high determines the bit value being transmitted. SDA must be stable when SCL is high and change when SCL is low as shown in Figure 14. After the START signal has been transmitted by the master, the bus is considered busy. Timing for the start condition is specified in Table 102.

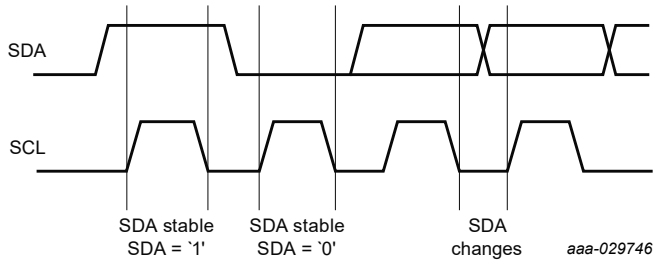

Figure 14. I²C bit transmissions

7.4.2 I²C start condition

A bus operation is always started with a start condition (START) from the master. A START is defined as a high to low transition on SDA while SCL is high as shown in Figure 15. After the START signal has been transmitted by the master, the bus is considered busy. Timing for the start condition is specified in Table 102.

A start condition (START) and a repeat START condition (rSTART) are identical.

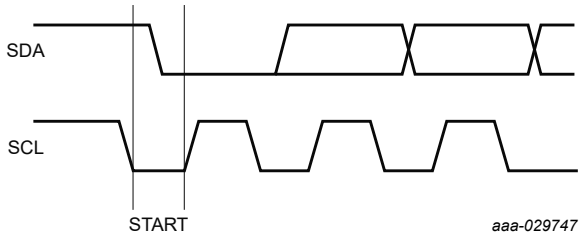

Figure 15. I²C start condition

7.4.3 I²C byte transmission

Data transfers are completed in byte increments. The number of bytes that can be transmitted per transfer is unrestricted. Each byte must be followed by an acknowledge bit (Section 7.4.4 "I2C acknowledge and not acknowledge transmissions") from the receiver. Data is transferred with the most significant bit (MSB) first (see Figure 16). The master generates all clock pulses, including the ninth clock for the acknowledge bit. Timing for the byte transmissions is specified in Section 7.4.4 "I2C acknowledge and not acknowledge transmissions". All functions for this device are completed within the acknowledge clock pulse. Clock stretching is not used.

All information provided in this document is subject to legal disclaimers.

© NXP B.V. 2019. All rights reserved.

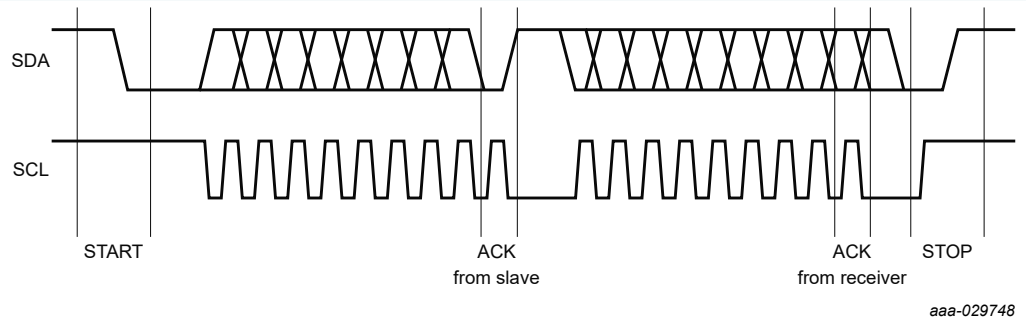

Figure 16. I²C byte transmissions

7.4.4 I²C acknowledge and not acknowledge transmissions

Each byte must be followed by an acknowledge bit (ACK) from the receiver. For an ACK, the transmitter releases SDA during the acknowledge clock pulse and the receiver pulls SDA low during the high portion of the clock pulse. Set up and hold times as specified in Table 102 must also be taken into account.

For a not acknowledge bit (NACK), SDA remains high during the entire acknowledge clock pulse. Five conditions lead to a NACK:

1. No receiver is present on the bus with the transmitted address.
2. The addressed receiver is unable to receive or transmit because it is performing some real-time function and is not ready to start communication with the master.
3. The receiver receives unrecognized data or commands.
4. The receiver cannot receive any more data bytes.
5. The master-receiver signals the end of the transfer to the slave transmitter.

Following a NACK, the master can transmit either a STOP to terminate the transfer, or a repeated START to initiate a new transfer.

An example ACK and NACK are shown in Figure 17.

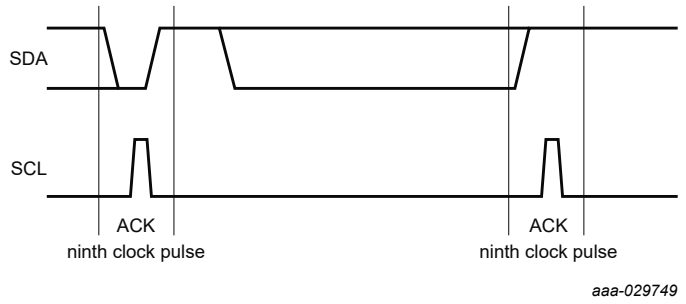

Figure 17. I²C acknowledge and not acknowledge transmission

7.4.5 I²C stop condition

A bus operation is always terminated with a stop condition (STOP) from the master. A STOP is defined as a low to high transition on SDA while SCL is high as shown in Figure 18. After the STOP has been transmitted by the master, the bus is considered free. Timing for the stop condition is specified in Table 102.

All information provided in this document is subject to legal disclaimers.

© NXP B.V. 2019. All rights reserved.

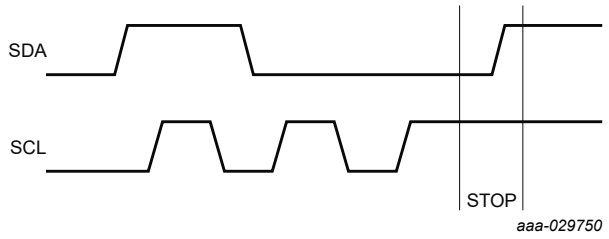

Figure 18. I²C stop condition

7.4.6 I²C register transfers

7.4.6.1 Register write transfers

The device supports I²C register write data transfers. Register write data transfers are constructed as follows:

1. The master transmits a START condition.
2. The master transmits the 7-bit slave address.
3. The master transmits a '0' for the read/write bit to indicate a write operation.
4. The slave transmits an ACK.
5. The master transmits the register address to be written.
6. The slave transmits an ACK.
7. The master transmits the data byte to be written to the register address.
8. The slave transmits an ACK.
9. The master transmits a STOP condition.

The device automatically increments the register address allowing for multiple register writes to be completed in one transaction. In this case, the register write data transfers are constructed as follows:

1. The master transmits a START condition.
2. The master transmits the 7-bit slave address.
3. The master transmits a '0' for the read/write bit to indicate a write operation.
4. The slave transmits an ACK.
5. The master transmits the register address to be written.
6. The slave transmits an ACK.
7. The master transmits the data byte to be written to the register address.
8. The slave transmits an ACK.
9. The master transmits the data byte to be written to the register address +1.
10. The slave transmits an ACK.
11. Repeat steps 9 and 10 until all registers are written.
12. The master transmits a STOP condition.

All information provided in this document is subject to legal disclaimers.

© NXP B.V. 2019. All rights reserved.

7.4.6.2 Register read transfers

The device supports I^{2}C register read data transfers. Register read data transfers are constructed as follows:

1. The master transmits a START condition.
2. The master transmits the 7-bit slave address.
3. The master transmits a '0' for the read/write bit to indicate a write operation.
4. The slave transmits an ACK.
5. The master transmits the register address to be read.
6. The slave transmits an ACK.
7. The master transmits a repeat START condition.
8. The master transmits the 7-bit slave address.
9. The master transmits a '1' for the read/write bit to indicate a read operation.
10. The slave transmits an ACK.
11. The slave transmits the data from the register addressed.
12. The master transmits a NACK.
13. The master transmits a STOP condition.

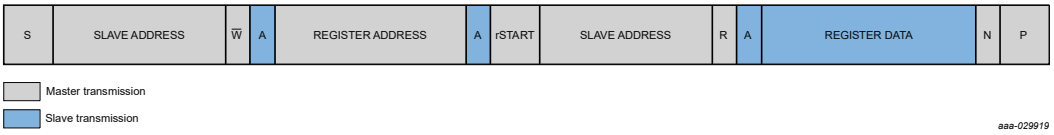

7.4.6.3 Sensor data register read wrap around

The device includes automatic sensor data register read wrap-around features to optimize the number of I^{2}C transactions necessary for continuous reads of sensor data. Depending on the state of the SIDx_EN bits in the SOURCEID_0 and SOURCEID_1 registers, the register address automatically wraps back to the DEVSTAT_COPY register as shown in Table 8.

Table 8. Sensor data register read wrap-around description

SID1_EN	SID0_EN	Address increment and wrap-around effect	Optimized register-read sequence
0	0	Address wraps around from $FF to $00	None
0	1	Address wraps from $63 (SNSDATA0_H) to $61 (DEVSTAT_COPY)	DEVSTAT_COPY, SNSDATA0_L, SNSDATA0_H
1	0	Address wraps from $65 (SNSDATA1_H) to $61 (DEVSTAT_COPY)	DEVSTAT_COPY, SNSDATA0_L, SNSDATA0_H, SNSDATA1_L, SNSDATA1_H
1	1	Address wraps from $69 (SNSDATA0_TIME3) to $61 (DEVSTAT_COPY)	DEVSTAT_COPY, SNSDATA0_L, SNSDATA0_H, SNSDATA1_L, SNSDATA1_H, SNSDATA0_TIME0, SNSDATA0_TIME1, SNSDATA0_TIME2, SNSDATA0_TIME3

All information provided in this document is subject to legal disclaimers.

© NXP B.V. 2019. All rights reserved.

7.4.7 I²C timing diagram

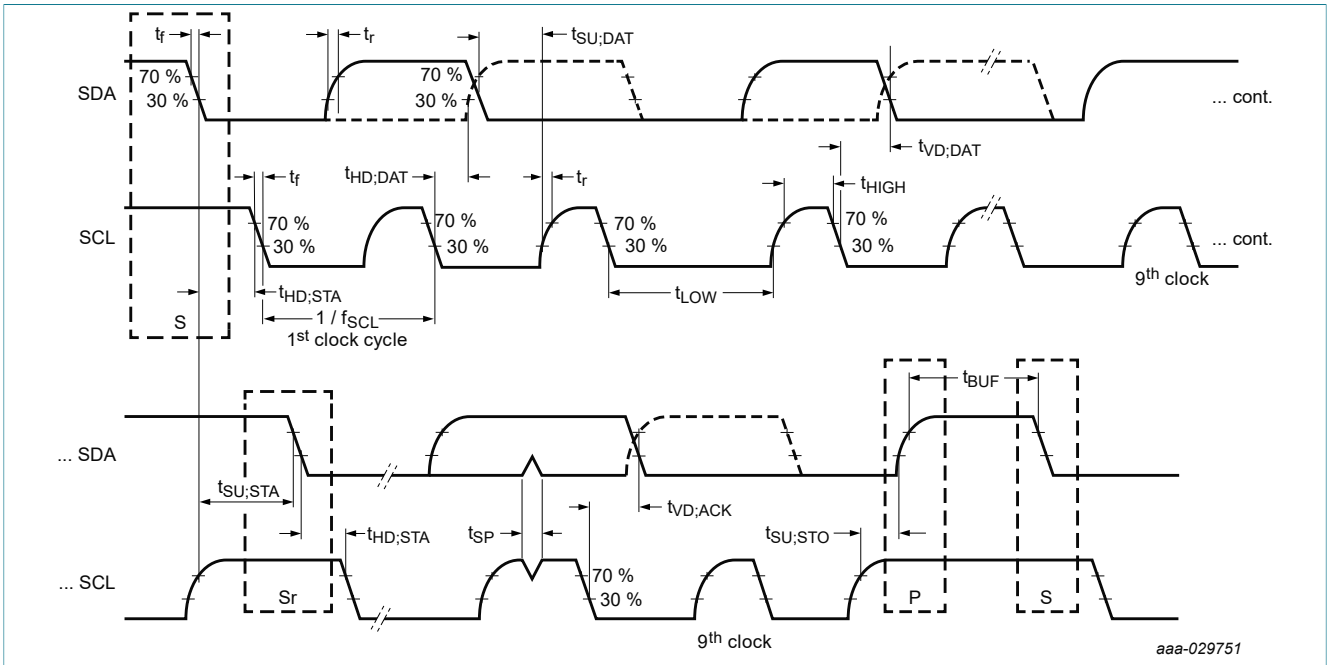

Figure 19. I²C timing diagram

7.5 Standard 32-bit SPI protocol

The device includes a standard SPI protocol requiring 32-bit data packets. The device is a slave device and requires that the base clock value be low (CPOL = 0) with data captured on the rising edge of the clock and data propagated on the falling edge of the clock (CPHA = 0). The most significant bit is transferred first (MSB first). SPI transfers are completed through a sequence of two phases. During the first phase, the command is transmitted from the SPI master to the device. During the second phase, response data is transmitted from the slave device. MOSI and SCLK transitions are ignored when SS_B is not asserted.

All information provided in this document is subject to legal disclaimers.

© NXP B.V. 2019. All rights reserved.

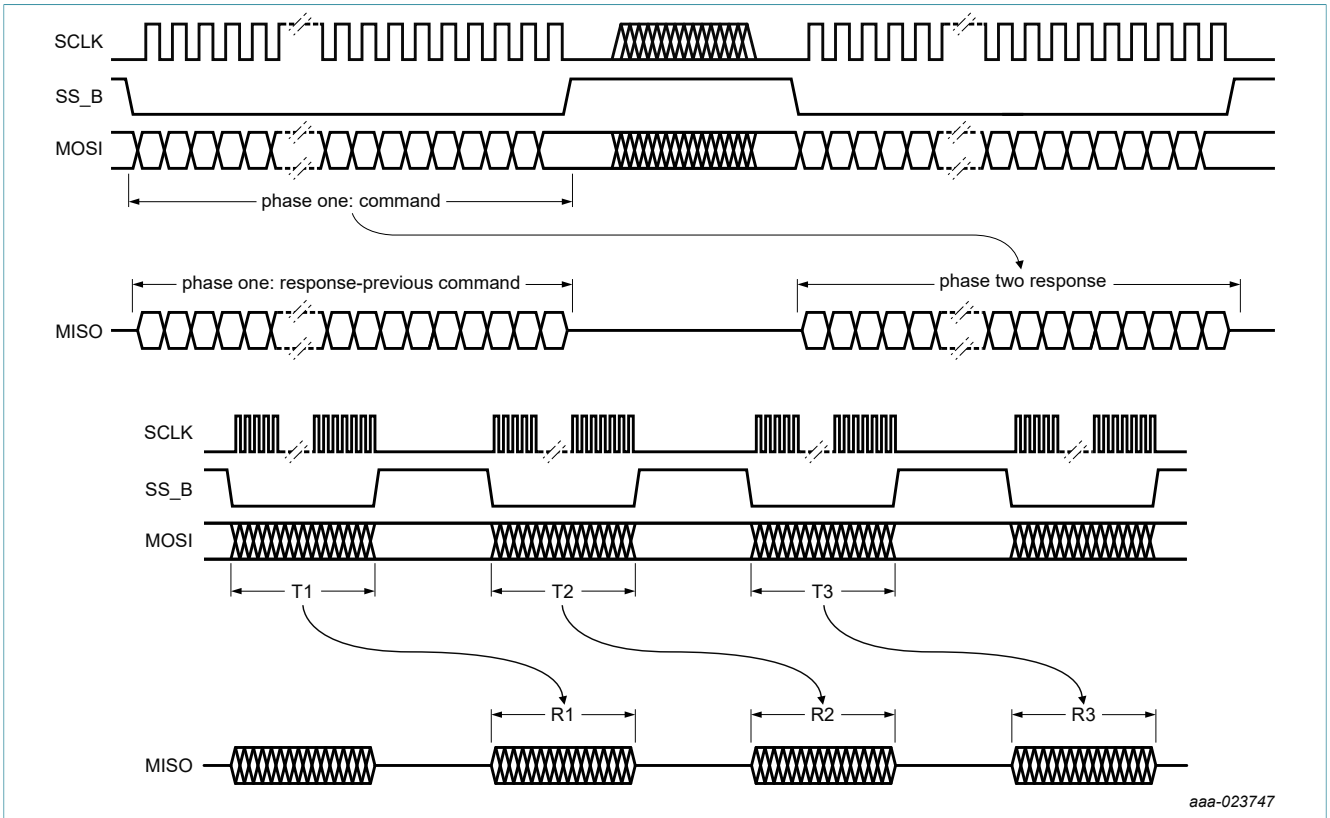

Figure 20. Standard 32 Bit SPI protocol timing diagram

7.5.1 SPI command format

Table 9. SPI command format

MSB: bit 31; LSB: bit 0

31	30	29	28	27	26	25	24	23	22	21	20	19	18	17	16	15	14	13	12	11	10	9	8	7	6	5	4	3	2	1	0
Register access command																															
Command				**Fixed bits: must = 0h**				**Register address**								**Register data**								**8-bit CRC**							
C[3:0]				0	0	0	0	RA[7:1]							RA[0]	RD[7:0]								CRC[7:0]							
Sensor data command																															
Command				**Fixed bits: must = 0 0000h**																				**8-bit CRC**							
C[3:0]				0	0	0	0	0	0	0	0	0	0	0	0	0	0	0	0	0	0	0	0	CRC[7:0]							

All information provided in this document is subject to legal disclaimers.

© NXP B.V. 2019. All rights reserved.

Table 10. SPI command bit allocation

C[3:0]				Command type	Data source SOURCEID[2:0] = C[3:1]	Reference
0	0	0	0	Unused Command (reserved for error response)	Not applicable	Not applicable
0	0	0	1	Sensor Data Request	SOURCEID = 0h	
0	0	1	0	reserved Command	Not applicable	Not applicable
0	0	1	1	Sensor Data Request	SOURCEID = 1h	
0	1	0	0	reserved Command	Not applicable	Not applicable
0	1	0	1	Sensor Data Request	SOURCEID = 2h	
0	1	1	0	reserved Command	Not applicable	Not applicable
0	1	1	1	Sensor Data Request	SOURCEID = 3h	
1	0	0	0	Register Write Request	Not applicable	
1	0	0	1	Sensor Data Request	SOURCEID = 4h	
1	0	1	0	reserved Command	Not applicable	Not applicable
1	0	1	1	Sensor Data Request	SOURCEID = 5h	
1	1	0	0	Register Read Request	Not applicable	
1	1	0	1	Sensor Data Request	SOURCEID = 6h	
1	1	1	0	Reserved Command	Not applicable	Not applicable
1	1	1	1	Sensor Data Request	SOURCEID = 7h	

7.5.2 SPI response format

Table 11. SPI response format

MSB: bit 31; LSB: bit 0

31	30	29	28	27	26	25	24	23	22	21	20	19	18	17	16	15	14	13	12	11	10	9	8	7	6	5	4	3	2	1	0
Response to Register Request																															
Command				**Basic Status**		**Unused Data 0h**		**Register data: contents of RA[7:1] high byte**								**Register data: contents of RA[7:1] low byte**								**8-bit CRC**							
C[0], [3:1]				ST[1:0]		0	0	RD[15:8]								RD[7:0]								CRC[7:0]							
Response to Sensor Data Request																															
Command				**Basic Status**		**Sensor Data**																**Detail Status**		**8-bit CRC**							
C[0], [3:1]				ST[1:0]		SD[11:0]												0	0	0	0	SF[1:0]		CRC[7:0]							
Error Response to Register Request																															
Command				**Basic Status**		**Unused Data = 0000h**																**Detail Status**		**8-bit CRC**							
C[0], [3:1]				1	1	0	0	0	0	0	0	0	0	0	0	0	0	0	0	0	0	SF[1:0]		CRC[7:0]							
Error Response to Sensor Data Request With Sensor Data																															
Command				**Basic Status**		**Sensor Data**																**Detail Status**		**8-bit CRC**							
C[0]	C[3]	C[2]	C[1]	1	1	SD[11:0]												0	0	0	0	SF[1:0]		CRC[7:0]							
Error Response to Sensor Data Request Without Sensor Data																															
Command				**Basic Status**		**x**	**Unused Data = 0000h**															**Detail Status**		**8-bit CRC**							
0	0	0	0	1	1	x	0	0	0	0	0	0	0	0	0	0	0	0	0	0	0	SF[1:0]		CRC[7:0]							

All information provided in this document is subject to legal disclaimers.

© NXP B.V. 2019. All rights reserved.

7.5.3 Command summary

7.5.3.1 Register read command

The device supports a register read command. The register read command uses the upper 7 bits of the addresses defined in Section 7.6 "User-accessible data array" to address 8-bit registers in the register map.

The response to a register read command is shown in Section 7.5.3.1.2 "Register read response message format". The response is transmitted on the next SPI message if and only if all of the following conditions are met:

- No SPI error is detected (see Section 7.5.5.3 "SPI error")
- No MISO error is detected (see Section 7.5.5.4 "SPI data output verification error")

If these conditions are met, the device responds to the register read request as shown in Section 7.5.3.1.2 "Register read response message format". Otherwise, the device responds with the error response as defined in Section 7.5.5.2 "Error responses". The register read response includes the register contents at the rising edge of SS_B for the register read command.

7.5.3.1.1 Register read command message format

Table 12. Register read command message format

MSB: bit 31; LSB: bit 0

31	30	29	28	27	26	25	24	23	22	21	20	19	18	17	16	15	14	13	12	11	10	9	8	7	6	5	4	3	2	1	0
Register access command																															
Command C[3:0]				**Fixed bits: must = 0h**				**Register address**								**Register data**								**8-bit CRC**							
1	1	0	0	0	0	0	0	RA[7:1]							RA[0]	0	0	0	0	0	0	0	0	CRC[7:0]							

Table 13. Register read command message bit field descriptions

Bit field	Definition
C[3:0]	Register read command = '1100'
RA[7:0]	RA[7:1] contains the word address of the register to be read.
CRC[7:0]	Read CRC Section

7.5.3.1.2 Register read response message format

Table 14. Register read response message format

MSB: bit 31; LSB: bit 0

31	30	29	28	27	26	25	24	23	22	21	20	19	18	17	16	15	14	13	12	11	10	9	8	7	6	5	4	3	2	1	0
Register access command																															
Command C[0], [3:1]				**Basic Status**		**Unused Data 0h**		**Register data: contents of RA[7:1] high byte**								**Register data: contents of RA[7:1] low byte**								**8-bit CRC**							
0	1	1	0	ST[1:0]		0	0	RD[15:8]								RD[7:0]								CRC[7:0]							

All information provided in this document is subject to legal disclaimers.

© NXP B.V. 2019. All rights reserved.

Table 15. Register read response message bit field descriptions

Bit field	Definition
C[0], [3:1]	Register Read Command = '0110'
ST[1:0]	Status
RD[15:8]	The contents of the register addressed by RA[7:1] high byte (RA[0] = 1)
RD[7:0]	The contents of the register addressed by RA[7:1] low byte (RA[0] = 0)
CRC[7:0]	8-bit CRC

7.5.3.2 Register write command

The device supports a register write command. The register write command writes the value specified in RD[7:0] to the register addressed by RA[7:0].

The response to a register write command is shown in Section 7.5.3.2.2 "Register write response message format". The register write is executed and a response is transmitted on the next SPI message if and only if all of the following conditions are met:

- No SPI error is detected (see Section 7.5.5.3 "SPI error")
- No MISO error is detected (see Section 7.5.5.4 "SPI data output verification error")
- The ENDINIT bit is cleared
  - This applies to all registers with the exception of the RESET[1:0] bits in the DEVLOCK_WR register
- No invalid register request is detected as described below

If these conditions are met, the register write is executed and the device responds to the register write request as shown in Section 7.5.3.2.2 "Register write response message format". Otherwise, no register is written and the device responds with the error response as defined in Section 7.5.2 "SPI response format". The register is not written until the transfer during which the register write was requested has been completed.

A register write command to a read-only register will not execute, but will result in a valid response.

7.5.3.2.1 Register write command message format

Table 16. Register write command message format

MSB: bit 31; LSB: bit 0

31	30	29	28	27	26	25	24	23	22	21	20	19	18	17	16	15	14	13	12	11	10	9	8	7	6	5	4	3	2	1	0
Register access command																															
Command C[3:0]				**Fixed bits: must = 0h**				**Register address**								**Register data**								**8-bit CRC**							
1	0	0	0	0	0	0	0	RA[7:1]							RA[0]	RD[7:0]								CRC[7:0]							

Table 17. Register write command message bit field descriptions

Bit field	Definition
C[3:0]	Register write command = '1000'
RA[7:0]	RA[7:1] contains the byte address of the register to be written
RD[7:0]	RD[7:0] contains the data byte to be written to address RA[7:0]
CRC[7:0]	8-bit CRC

All information provided in this document is subject to legal disclaimers.

© NXP B.V. 2019. All rights reserved.

7.5.3.2.2 Register write response message format

Table 18. Register write response message format

MSB: bit 31; LSB: bit 0

31	30	29	28	27	26	25	24	23	22	21	20	19	18	17	16	15	14	13	12	11	10	9	8	7	6	5	4	3	2	1	0
Register access command																															
Command C[0], [3:1]				**Basic Status**		**Unused Data 0h**		**Register data: contents of RA[7:1] high byte**								**Register data: contents of RA[7:1] low byte**								**8-bit CRC**							
0	1	0	0	ST[1:0]		0	0	RD[15:8]								RD[7:0]								CRC[7:0]							

Table 19. Register write response message bit field descriptions

Bit field	Definition
C[0], [3:1]	Register Read Command = '0100'
ST[1:0]	Status
RD[15:8]	The contents of the register addressed by RA[7:1] high byte (RA[0] = 1)
RD[7:0]	The contents of the register addressed by RA[7:1] low byte (RA[0] = 0)
CRC[7:0]	8-bit CRC

7.5.3.3 Sensor data request commands

The device supports standard sensor data request commands. The sensor data request command format is described in Section 7.5.3.3.1 "Sensor data request command message format". The response to a sensor data request is shown in Section 7.5.3.3.2 "Sensor data request response message format". The response is transmitted on the next SPI message subject to the error handling conditions specified in Section 7.5.5 "Exception handling". The sensor data included in the response is the sensor data at the falling edge of SS_B for the sensor data request response.

7.5.3.3.1 Sensor data request command message format

Table 20. Sensor data request command message format

MSB: bit 31; LSB: bit 0

31	30	29	28	27	26	25	24	23	22	21	20	19	18	17	16	15	14	13	12	11	10	9	8	7	6	5	4	3	2	1	0
Command				**Fixed bits: must = 0 0000h**																				**8-bit CRC**							
C[3:0]				0	0	0	0	0	0	0	0	0	0	0	0	0	0	0	0	0	0	0	0	CRC[7:0]							

Table 21. Sensor data request command message bit field descriptions

Bit field	Definition
C[0]	Sensor data request command = '1'
C[3:1] = SOURCEID[2:0]	Source identification code for the requested sensor data
CRC[7:0]	8-bit CRC

All information provided in this document is subject to legal disclaimers.

© NXP B.V. 2019. All rights reserved.

7.5.3.3.2 Sensor data request response message format

Table 22. Sensor data request response message format

MSB: bit 31; LSB: bit 0

31	30	29	28	27	26	25	24	23	22	21	20	19	18	17	16	15	14	13	12	11	10	9	8	7	6	5	4	3	2	1	0
Command				**Basic Status**		**Sensor Data**																**Detail Status**		**8-bit CRC**							
C[0], [3:1]				ST[1:0]		SD[11:0]												0	0	0	0	SF[1:0]		CRC[7:0]							

Table 23. Sensor data request response message bit field descriptions

Bit field	Definition
C[0]	Sensor data request command = '1'
C[3:1] = SOURCEID[2:0]	Source identification code for the requested sensor data
ST[1:0]	Basic Status
SD[11:0]	Sensor data
SF[1:0]	Detailed status
CRC[7:0]	8-bit CRC

7.5.3.4 Reserved commands

The device responds to reserved commands on the next SPI message subject to the error handling conditions specified in Section 7.5.5 "Exception handling".

7.5.3.4.1 Reserved command message format

Table 24. Reserved command message format

MSB: bit 31; LSB: bit 0

31	30	29	28	27	26	25	24	23	22	21	20	19	18	17	16	15	14	13	12	11	10	9	8	7	6	5	4	3	2	1	0
Command				x	x	x	x	x	x	x	x	x	x	x	x	x	x	x	x	x	x	x	x	**8-bit CRC**							
0	0	0	0	x	x	x	x	x	x	x	x	x	x	x	x	x	x	x	x	x	x	x	x	CRC[7:0]							
0	0	1	0	x	x	x	x	x	x	x	x	x	x	x	x	x	x	x	x	x	x	x	x	CRC[7:0]							
0	1	0	0	x	x	x	x	x	x	x	x	x	x	x	x	x	x	x	x	x	x	x	x	CRC[7:0]							
0	1	1	0	x	x	x	x	x	x	x	x	x	x	x	x	x	x	x	x	x	x	x	x	CRC[7:0]							
1	0	1	0	x	x	x	x	x	x	x	x	x	x	x	x	x	x	x	x	x	x	x	x	CRC[7:0]							
1	1	1	0	x	x	x	x	x	x	x	x	x	x	x	x	x	x	x	x	x	x	x	x	CRC[7:0]							

Table 25. Reserved command message bit field descriptions

Bit field	Definition
C[3:0]	Reserved command
CRC[7:0]	8-bit CRC

7.5.3.4.2 Reserved command response message format

Table 26. Reserved command response message format

MSB: bit 15; LSB: bit 0

31	30	29	28	27	26	25	24	23	22	21	20	19	18	17	16	15	14	13	12	11	10	9	8	7	6	5	4	3	2	1	0
Command Echo				**Data**																				**8-bit CRC**							
x	x	x	x	x	x	x	x	x	x	x	x	x	x	x	x	x	x	x	x	x	x	x	x	CRC[7:0]							

All information provided in this document is subject to legal disclaimers.

© NXP B.V. 2019. All rights reserved.

Table 27. Reserved command response message bit field descriptions

Bit field	Definition
Command echo	Reserved command echo. Undefined
Data	Response data. Undefined
CRC[7:0]	8-bit CRC

7.5.4 Error checking

7.5.4.1 Default 8-bit CRC

7.5.4.1.1 Command error checking

The device calculates an 8-bit CRC on the entire 32 bits of each command. Message data is entered into the CRC calculator MSB first, consistent with the transmission order of the message. If the calculated CRC does not match the transmitted CRC, the command is ignored and the device responds with the SPI error response.

The CRC decoding procedure is as follows:

1. A seed value is preset into the LSB of the shift register.
2. Using a serial CRC calculation method, the receiver rotates the received message and CRC into the LSB of the shift register in the order received (MSB first).
3. When the calculation on the last bit of the CRC is rotated into the shift register, the shift register contains the CRC check result.
4. If the shift register contains all zeros, the CRC is correct.
5. If the shift register contains a value other than zero, the CRC is incorrect.

The CRC polynomial and seed are shown in Table 28.

Table 28. SPI Command Message CRC

SPICRCSEED[3:0]	Default Polynomial	Default non-direct Seed
0000	$x^8 + x^5 + x^3 + x^2 + x + 1$	1111 1111
non-zero	$x^8 + x^5 + x^3 + x^2 + x + 1$	1111 SPICRCSEED[3:0]

7.5.4.1.2 Response error checking

The device calculates a CRC on the entire 32 bits of each response. Message data is entered into the CRC calculator MSB first, consistent with the transmission order of the message.

The CRC encoding procedure is as follows:

1. A seed value is preset into the LSB of the shift register.
2. Using a serial CRC calculation method, the transmitter rotates the transmitted message and CRC into the LSB of the shift register (MSB first).
3. Following the transmitted message, the transmitter feeds 8 zeros into the shift register, to match the length of the CRC.
4. When the last zero is fed into the input adder, the shift register contains the CRC.
5. The CRC is transmitted.

The CRC polynomial and seed are shown in Table 29.

All information provided in this document is subject to legal disclaimers.

© NXP B.V. 2019. All rights reserved.

Table 29. SPI Response Message CRC

SPICRCSEED[3:0]	Default Polynomial	Default non-direct Seed
0000	$x^8 + x^5 + x^3 + x^2 + x + 1$	1111 1111
nonzero	$x^8 + x^5 + x^3 + x^2 + x + 1$	1111 SPICRCSEED[3:0]

7.5.5 Exception handling

7.5.5.1 Basic status field

All responses include a status field (ST[1:0]) that includes the general status of the device and transmitted data as described below. The contents of the status field is a representation of the device status at the rising edge of SS_B for the previous SPI command.

Table 30. Basic status field for responses to register commands

ST[1:0]		Status	Description	SF[1:0]		Priority
0	0	Device in Initialization	Device in initialization (ENDINIT not set)	0	0	3
0	1	Normal Mode	Normal mode(ENDINIT set)	0	0	4
1	0	Self-test	Self-test(ST_CTRL[3:0] not equal to '0000')	0	0	2
1	1	Internal Error Present	Detailed Status Field	Detailed Status Field		1

7.5.5.2 Error responses

Table 31. Error responses bit field descriptions

SF[1:0]		Status Sources	DEVSTAT State
0	0	Oscillator training error (OSCTRAIN_ERR) Offset error (PABS_HIGH or PABS_LOW or CM_ERROR) Temperature error	Bit set in DEVSTAT3 Bit set in DSP_STAT Bit set in DEVSTAT2
0	1	User OTP memory error (UF2 or UF1) User R/W memory error (UF2) NXP OTP Memory error	U_OTP_ERR set in DEVSTAT2 U_RW_ERR set in DEVSTAT2 F_OTP_ERR set in DEVSTAT2
1	0	Test Mode active Supply error Reset error	TESTMODE bit set in DEVSTAT bit set in DEVSTAT1 DEVRES set
1	1	MISO error SPI error	Bit set in DEVSTAT3 N/A

7.5.5.3 SPI error

The following external SPI conditions result in a SPI error:

- SCLK is high when SS_B is asserted
- The number of SCLK rising edges detected while SS_B is asserted is not equal to 16
- SCLK is high when SS_B is deasserted
- CRC error is detected (MOSI)
- A register write command to any register other than the DEVLOCK_WR register is received while ENDINIT is set

If a SPI error is detected, the device responds with the error response as described in Section 7.5.5.2 "Error responses" with the detailed status field set to “SPI Error” as defined in Section 7.5.5.1 "Basic status field".

All information provided in this document is subject to legal disclaimers.

© NXP B.V. 2019. All rights reserved.

7.5.5.4 SPI data output verification error

The device includes a function to verify the integrity of the data output to the MISO pin. The function compares the data transmitted on the MISO pin to the data intended to be transmitted. If any one bit does not match, a SPI MISO mismatch fault is detected and the MISO_ERR flag in the DEVSTAT2 register is set.

If a valid sensor data request message is received during the SPI transfer with the MISO mismatch failure, the request is ignored and the device responds with the error response as described in Section 7.5.5.2 "Error responses" with the detailed status field set to “SPI Error” as defined in Section 7.5.5.1 "Basic status field" during the subsequent SPI message.

If a valid register write request message is received during the SPI transfer with the MISO mismatch failure, the register write is completed as requested, but the device responds with the error response as described in Section 7.5.5.2 "Error responses" with the detailed status field set to “SPI Error” as defined in Section 7.5.5.1 "Basic status field" during the subsequent SPI message.

If a valid register read request message is received during the SPI transfer with the MISO mismatch failure, the register read is ignored and the device responds with the error response as described in Section 7.5.5.2 "Error responses" with the detailed status field set to “SPI Error” as defined in Section 7.5.5.1 "Basic status field", during the subsequent SPI message.

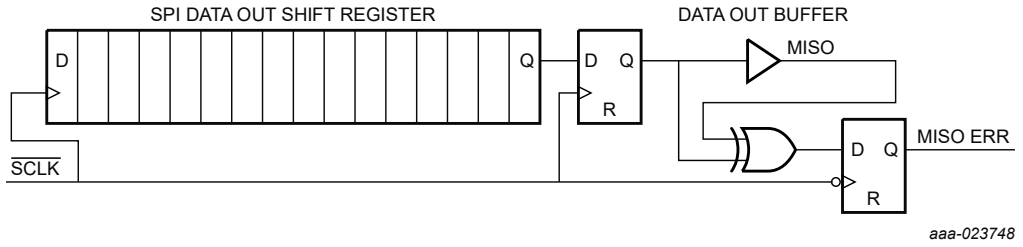

Figure 21. SPI data output verification

7.5.6 SPI timing diagram

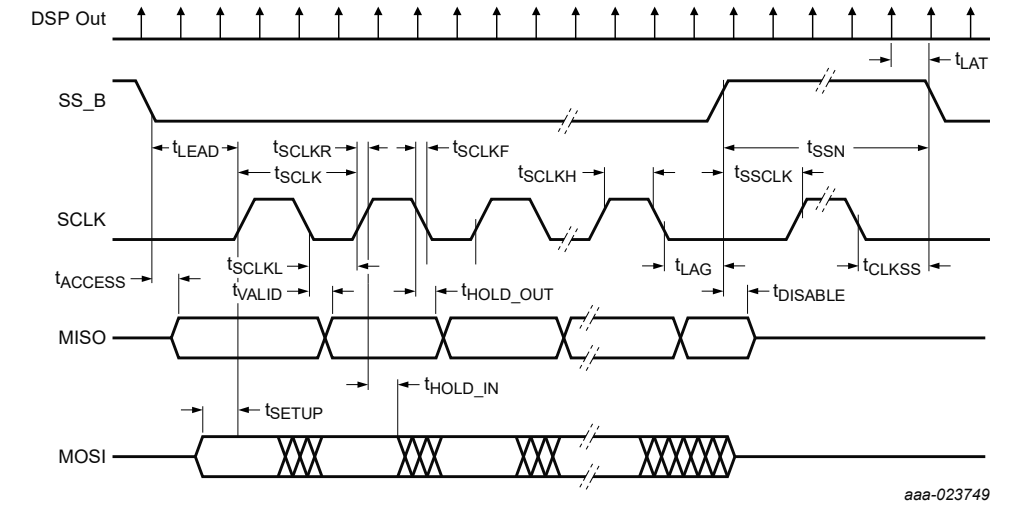

Figure 22. SPI timing diagram

All information provided in this document is subject to legal disclaimers.

© NXP B.V. 2019. All rights reserved.

7.6 User-accessible data array

A user-accessible data array allows each device to be customized. The array consists of a one time programmable (OTP) factory-programmable block, an OTP user-programmable block, and read-only registers for data and device status. The OTP blocks incorporate independent data verification.

Table 32. User-accessible data — sensor specific information

Address	Register	Type[1]	Bit							
			7	6	5	4	3	2	1	0
General device information										
$00	COUNT	R	COUNT[7:0]							
$01	DEVSTAT	R	DSP_ERR	reserved	COMM_ERR	MEMTEMP_ ERR	SUPPLY_ ERR	TESTMODE	DEVRES	DEVINIT
$02	DEVSTAT1	R	VCCUV_ ERR	reserved	VCCOV_ ERR	reserved	INTREGA_ ERR	INTREG_ ERR	INTREGF_ ERR	CONT_ERR
$03	DEVSTAT2	R	F_OTP_ERR	U_OTP_ ERR	U_RW_ERR	U_W_ ACTIVE	reserved	TEMP0_ ERR	reserved	reserved
$04	DEVSTAT3	R	MISO_ERR	OSCTRAIN_ ERR	reserved	reserved	reserved	reserved	reserved	reserved
$05	reserved	R	reserved							
$06 to $0D	reserved	R	reserved							
$0E	TEMPERATURE	R	TEMP[7:0]							
$0F	reserved	R	reserved							
Communication information										
$10	DEVLOCK_WR	R/W	ENDINIT	reserved	reserved	reserved	SUP_ ERR_DIS	reserved	RESET[1:0]	
$11 to $13	reserved	R/W	reserved							
$14	UF_REGION_W	R/W	REGION_LOAD[3:0]				0	0	0	0
$15	UF_REGION_R	R	REGION_ACTIVE[3:0]				0	0	0	0
$16	COMMTYPE	UF2	reserved	reserved	reserved	reserved	reserved	COMMTYPE[2:0]		
$17 to $19	reserved	UF2	reserved							
$1A	SOURCEID_0	UF2	SID0_EN	reserved			SOURCEID_0[3:0]			
$1B	SOURCEID_1	UF2	SID1_EN	reserved			SOURCEID_1[3:0]			
$1C to $21	reserved	UF2	reserved							
$22	TIMING_CFG	UF2	reserved			OSCTRAIN_ SEL	CK_CAL_ RST	reserved	reserved	CK_CAL_EN
$23 to $3C	reserved	UF2	reserved							
$3D	SPI_CFG	UF2	reserved	DATASIZE	SPI_CRC_LEN[1:0]		SPICRCSEED[3:0]			
$3E	WHO_AM_I	UF2	WHO_AM_I[7:0]							
$3F	I2C_ADDRESS	UF2	I2C_ADDRESS[7:0]							
Sensor specific information										
$40	DSP_CFG_U1	UF2	LPF[3:0]				reserved	reserved	USER_RANGE[1:0]	
$41	DSP_CFG_U2	UF2	reserved							
$42	DSP_CFG_U3	UF2	reserved							
$43	DSP_CFG_U4	UF2	reserved	reserved	reserved	reserved	A_OUT	INT_OUT	reserved	reserved
$44	DSP_CFG_U5	UF2	ST_CTRL[3:0]				reserved	reserved	reserved	reserved

All information provided in this document is subject to legal disclaimers.

© NXP B.V. 2019. All rights reserved.

Address	Register	Type[1]	Bit							
			7	6	5	4	3	2	1	0
$45	INT_CFG	UF2	reserved		INT_PS[1:0]		INT_ POLARITY	reserved		
$46	P_INT_HI_L	UF2	P_INT_HI_L[7:0]							
$47	P_INT_HI_H	UF2	P_INT_HI_H[15:8]							
$48	P_INT_LO_L	UF2	P_INT_LO_L[7:0]							
$49	P_INT_LO_H	UF2	P_INT_LO_H[15:8]							
$4A	reserved	UF2	reserved							
$4B	reserved	UF2	reserved							
$4C	P_CAL_ZERO_L	UF2	P_CAL_ZERO_L[7:0]							
$4D	P_CAL_ZERO_H	UF2	P_CAL_ZERO_H[15:8]							
$4E	reserved	UF2	reserved							
$4F to $5E	reserved	UF2	reserved							
$5F	CRC_UF2	F	LOCK_UF2	0	0	0	CRC_UF2[3:0]			
$60	DSP_STAT	R	reserved	PABS_HIGH	PABS_LOW	reserved	ST_ INCMPLT	ST_ACTIVE	CM_ERROR	ST_ERROR
$61	DEVSTAT_ COPY	R	DSP_ERR	reserved	COMM_ERR	MEMTEMP_ ERR	SUPPLY_ ERR	TESTMODE	DEVRES	DEVINT
$62	SNSDATA0_L	R	SNSDATA0_L[7:0]							
$63	SNSDATA0_H	R	SNSDATA0_H[15:8]							
$64	SNSDATA1_L	R	SNSDATA1_L[7:0]							
$65	SNSDATA1_H	R	SNSDATA1_H[15:8]							
$66	SNSDATA0_ TIME0	R	SNSDATA0_TIME[7:0]							
$67	SNSDATA0_ TIME1	R	SNSDATA0_TIME[15:8]							
$68	SNSDATA0_ TIME2	R	SNSDATA0_TIME[23:16]							
$69	SNSDATA0_ TIME3	R	SNSDATA0_TIME[31:24]							
$6A	SNSDATA0_ TIME4	R	SNSDATA0_TIME[39:32]							
$6B	SNSDATA0_ TIME5	R	SNSDATA0_TIME[47:40]							
$6C	P_MAX_L	R	P_MAX[7:0]							
$6D	P_MAX_H	R	P_MAX[15:8]							
$6E	P_MIN_L	R	P_MIN[7:0]							
$6F	P_MIN_H	R	P_MIN[15:8]							
$70 to $77	reserved	R	reserved							
$78	FRT0	R	FRT[7:0]							
$79	FRT1	R	FRT[15:8]							
$7A	FRT2	R	FRT[23:16]							
$7B	FRT3	R	FRT[31:24]							
$7C	FRT4	R	FRT[39:32]							
$7D	FRT5	R	FRT[47:40]							
$7E to $9F	reserved	R	reserved							

All information provided in this document is subject to legal disclaimers.

© NXP B.V. 2019. All rights reserved.

Address	Register	Type[1]	Bit							
			7	6	5	4	3	2	1	0
Sensor Specific Information - User Readable Registers with OTP										
$A0	DSP_CFG_F	F	DEV_RANGE[3:0]				reserved	reserved	reserved	reserved
$A1 to $AE	reserved	F	reserved							
$AF	CRC_F_A	F	LOCK_F_A	REGA_BLOCKID[2:0]			CRC_F_A[3:0]			
$B0 to $BE	reserved	F	reserved							
$BF	CRC_F_B	F	LOCK_F_B	REGB_BLOCKID[2:0]			CRC_F_B[3:0]			
Traceability Information										
$C0	ICTYPEID	F	ICTYPEID[7:0]							
$C1	ICREVID	F	ICREVID[7:0]							
$C2	ICMFGID	F	ICMFGID[7:0]							
$C3	reserved	F	reserved							
$C4	PN0	F	PN0[7:0]							
$C5	PN1	F	PN1[7:0]							
$C6	SN0	F	SN[7:0]							
$C7	SN1	F	SN[15:8]							
$C8	SN2	F	SN[23:16]							
$C9	SN3	F	SN[31:24]							
$CA	SN4	F	SN[39:32]							
$CB	ASICWFR#	F	ASICWFR#[7:0]							
$CC	ASICWFR_X	F	ASICWFR_X[7:0]							
$CD	ASICWFR_Y	F	ASICWFR_Y[7:0]							
$CE	reserved	F	reserved							
$CF	CRC_F_C	F	LOCK_F_C	REGC_BLOCKID[2:0]			CRC_F_C[3:0]			
$D0	ASICWLOT_L	F	ASICWLOT_L[7:0]							
$D1	ASICWLOT_H	F	ASICWLOT_H[7:0]							
$D2	reserved	—	reserved							
$D3	reserved	—	reserved							
$D4	reserved	—	reserved							
$D5	reserved	—	reserved							
$D6 to $DE	reserved	F	reserved							
$DF	CRC_F_D	F	LOCK_F_D	REGD_BLOCKID[2:0]			CRC_F_D[3:0]			
$E0	USERDATA_0	UF2	USERDATA_0[7:0]							
$E1	USERDATA_1	UF2	USERDATA_1[7:0]							
$E2	USERDATA_2	UF2	USERDATA_2[7:0]							
$E3	USERDATA_3	UF2	USERDATA_3[7:0]							
$E4	USERDATA_4	UF2	USERDATA_4[7:0]							
$E5	USERDATA_5	UF2	USERDATA_5[7:0]							
$E6	USERDATA_6	UF2	USERDATA_6[7:0]							
$E7	USERDATA_7	UF2	USERDATA_7[7:0]							
$E8	USERDATA_8	UF2	USERDATA_8[7:0]							
$E9	USERDATA_9	UF2	USERDATA_9[7:0]							
$EA	USERDATA_A	UF2	USERDATA_A[7:0]							
$EB	USERDATA_B	UF2	USERDATA_B[7:0]							

All information provided in this document is subject to legal disclaimers.

© NXP B.V. 2019. All rights reserved.

Address	Register	Type[1]	Bit							
			7	6	5	4	3	2	1	0
$EC	USERDATA_C	UF2	USERDATA_C[7:0]							
$ED	USERDATA_D	UF2	USERDATA_D[7:0]							
$EE	USERDATA_E	UF2	USERDATA_E[7:0]							
$EF	CRC_UF0	F	LOCK_UF0	REGE_BLOCKID[2:0]			CRC_UF0[3:0]			
$F0	USERDATA_10	UF1	USERDATA_10[7:0]							
$F1	USERDATA_11	UF1	USERDATA_11[7:0]							
$F2	USERDATA_12	UF1	USERDATA_12[7:0]							
$F3	USERDATA_13	UF1	USERDATA_13[7:0]							
$F4	USERDATA_14	UF1	USERDATA_14[7:0]							
$F5	USERDATA_15	UF1	USERDATA_15[7:0]							
$F6	USERDATA_16	UF1	USERDATA_16[7:0]							
$F7	USERDATA_17	UF1	USERDATA_17[7:0]							
$F8	USERDATA_18	UF1	USERDATA_18[7:0]							
$F9	USERDATA_19	UF1	USERDATA_19[7:0]							
$FA	USERDATA_1A	UF1	USERDATA_1A[7:0]							
$FB	USERDATA_1B	UF1	USERDATA_1B[7:0]							
$FC	USERDATA_1C	UF1	USERDATA_1C[7:0]							
$FD	USERDATA_1D	UF1	USERDATA_1D[7:0]							
$FE	USERDATA_1E	UF1	USERDATA_1E[7:0]							
$FF	CRC_UF1	F	LOCK_UF1	REGF_BLOCKID[2:0]			CRC_UF1[3:0]			

[1] Memory type codes
R — Readable register with no OTP
F — User readable register with OTP
UF2 — One time user programmable OTP location region 2

7.7 Register information

7.7.1 COUNT - rolling counter register (address 00h)

The count register is a read-only register that provides the current value of a free-running 8-bit counter derived from the primary oscillator. A 10-bit prescaler divides the primary oscillator frequency by 1000. Thus, the value in the register increases by one count every 100 µs and the counter rolls over every 25.6 ms.

Table 33. COUNT - rolling counter register (address 00h) bit allocation

Bit	7	6	5	4	3	2	1	0
Symbol	COUNT[7:0]							
Reset	0	0	0	0	0	0	0	0
Access	R	R	R	R	R	R	R	R

7.7.2 Device status registers

The device status registers are read-only registers that contain device status information. These registers are readable in SPI or I^2C mode.

All information provided in this document is subject to legal disclaimers.

© NXP B.V. 2019. All rights reserved.

7.7.2.1 DEVSTAT - device status register (address 01h)

Table 34. DEVSTAT - device status register (address 01h) bit allocation

Bit	7	6	5	4	3	2	1	0
Symbol	DSP_ERR	reserved	COMM_ ERR	MEMTEMP_ ERR	SUPPLY_ ERR	TEST MODE	DEVRES	DEVINIT
Reset	1	reserved	0	0	x	0	1	1
Access	R	R	R	R	R	R	R	R

Table 35. DEVSTAT - device status register (address 01h) bit description

Bit	Symbol	Description
7	DSP_ERR	The DSP error flag is set if a DSP-specific error is present in the pressure signal DSP: *DSP_ERR = DSP_STAT[PABS_HIGH] | DSP_STAT[PABS_LOW] | DSP_STAT[ST_ INCMPLT] | DSP_STAT[CM_ERROR] | DSP_STAT[ST_ERROR]*
5	COMM_ERR	The communication error flag is set if any bit in DEVSTAT3 is set: *COMM_ERR = MISO_ERR*
4	MEMTEMP_ERR	The memory error flag is set if any bit in DEVSTAT2 is set: *MEMTEMP_ERR = F_OTP_ERR | U_OTP_ERR | U_RW_ERR | U_W_ACTIVE | TEMP0_ERR*
3	SUPPLY_ERR	The supply error flag is set if any bit in DEVSTAT1 is set: *SUPPLY_ERR = VCCUV_ERR | VCCOV_ER | INTREG_ERR | INTREGA_ERR | INTREGF_ERR*
2	TESTMODE	The test mode bit is set if the device is in test mode. The TESTMODE bit can be cleared by a test mode operation or by a power cycle. **0 —** Test mode is not active **1 —** Test mode is active
1	DEVRES	The device reset bit is set following a device reset. This error is cleared by a read of the DEVSTAT register through any communication interface or on a data transmission that includes the error in the status field. **0 —** Normal operation **1 —** Device reset occurred
0	DEVINIT	The device initialization bit is set following a device reset. The bit is cleared once sensor data is valid for read through one of the device communication interfaces ($t_{POR_DataValid}$). **0 —** Normal operation **1 —** Device initialization in process

7.7.2.2 DEVSTAT1 - device status register (address 02h)

Table 36. DEVSTAT1 - device status register (address 02h) bit allocation

Bit	7	6	5	4	3	2	1	0
Symbol	VCCUV_ ERR	reserved	VCCOV_ ERR	reserved	INTREGA_ ERR	INTREG_ ERR	INTREGF_ ERR	CONT_ERR
Reset	x	x	x	x	x	x	x	0
Access	R	R	R	R	R	R	R	R

All information provided in this document is subject to legal disclaimers.

© NXP B.V. 2019. All rights reserved.

Table 37. DEVSTAT1 - device status register (address 02h) bit description

Bit	Symbol	Description
7	VCCUV_ERR	The V_{CC} undervoltage error bit is set if the V_{CC} voltage falls below the voltage specified in Table 101. See Section 7.1 for details on the V_{CC} undervoltage monitor. This bit is cleared once sensor data is valid for read through one of the device communication interfaces ($t_{POR_DataValid}$). **0** — No error detected **1** — V_{CC} voltage low
5	VCCOV_ERR	The V_{CC} overvoltage error bit is set if the V_{CC} voltage rises above the voltage specified in Table 101. See Section 7.1 for details on the V_{CC} overvoltage monitor. A common timer is used for all error bits in the DEVSTAT1 register. If any supply error is present, the timer is reset to t_{UVOV_RCV}. This bit is cleared once sensor data is valid for read through one of the device communication interfaces ($t_{POR_DataValid}$). **0** — No error detected **1** — V_{CC} voltage high
3	INTREGA_ERR	The internal analog regulator voltage out-of-range error bit is set if the internal analog regulator voltage falls outside of expected limits. This bit is cleared once sensor data is valid for read through one of the device communication interfaces ($t_{POR_DataValid}$). **0** — No error detected **1** — Internal analog regulator voltage out of range
2	INTREG_ERR	The internal digital regulator voltage out-of-range error bit is set if the internal digital regulator voltage falls outside of expected limits. This bit is cleared once sensor data is valid for read through one of the device communication interfaces ($t_{POR_DataValid}$). **0** — No error detected **1** — Internal digital regulator voltage out of range
1	INTREGF_ERR	The internal OTP regulator voltage out-of-range error bit is set if the internal OTP regulator voltage falls outside of expected limits. This bit is cleared once sensor data is valid for read through one of the device communication interfaces ($t_{POR_DataValid}$). **0** — No error detected **1** — Internal OTP regulator voltage out of range
0	CONT_ERR	The continuity monitor passes a low current through a connection around the perimeter of the device and monitors the continuity of the connection. The error bit is set if a discontinuity is detected in the connection. A common timer is used for all error bits in the DEVSTAT1 register. If any supply error is present, the timer is reset to $t_{UVOV_RCV.}$ This bit is cleared based on the state of the SUP_ERR_DIS bit in the DEVLOCK_WR register as shown in Section 7.7.4. **0** — No error detected **1** — Error detected in the continuity of the edge seal monitor circuit

7.7.2.3 DEVSTAT2 - device status register (address 03h)

Table 38. DEVSTAT2 - device status register (address 03h) bit allocation

Bit	7	6	5	4	3	2	1	0
Symbol	F_OTP_ ERR	U_OTP_ ERR	U_RW_ERR	U_W_ ACTIVE	reserved	TEMP0_ ERR	reserved	reserved
Reset	0	0	0	0	reserved	0	reserved	reserved
Access	R	R	R	R	R	R	R	R

All information provided in this document is subject to legal disclaimers.

© NXP B.V. 2019. All rights reserved.

Table 39. DEVSTAT2 - device status register (address 03h) bit description

Bit	Symbol	Description
7	F_OTP_ERR	The NXP factory OTP array error bit is set if a fault is detected in the factory OTP array. This error is cleared by a read of the DEVSTAT2 register through any communication interface or on a data transmission that includes the error in the status field. **0 —** No error detected **1 —** Error detected in the NXP factory OTP array
6	U_OTP_ERR	The user OTP array error bit is set if a fault is detected in the user OTP array. This error is cleared by a read of the DEVSTAT2 register through any communication interface or on a data transmission that includes the error in the status field. **0 —** No error detected **1 —** Error detected in the user OTP array
5	U_RW_ERR	When ENDINIT is set, an error detection is enabled for all user writable registers. The error detection code is continuously calculated on the user writable registers and verified against a previously calculated error detection code. If a mismatch is detected in the error detection, the U_RW_ERR bit is set. This error is cleared by a read of the DEVSTAT2 register through any communication interface or on a data transmission that includes the error in the status field. **0 —** No error detected **1 —** Error detected in the user read/write array
4	U_W_ACTIVE	The user OTP write in process status bit is set if a user initiated write to OTP is currently in process. The U_W_ACTIVE bit is automatically cleared once the write to OTP is complete. **0 —** No OTP write in process **1 —** OTP write in process
2	TEMP0_ERR	The temperature error bit is set if an overtemperature or undertemperature condition exists. This error is cleared by a read of the DEVSTAT2 register through any communication interface or on a data transmission that includes the error in the status field. **0 —** No error detected **1 —** Overtemperature or undertemperature error condition detected

7.7.2.4 DEVSTAT3 - device status register (address 04h)

Table 40. DEVSTAT3 - device status register (address 04h) bit allocation

Bit	7	6	5	4	3	2	1	0
Symbol	MISO_ERR	OSCTRAIN_ERR	reserved	reserved	reserved	reserved	reserved	reserved
Reset	0	0	reserved	reserved	reserved	reserved	reserved	reserved
Access	R	R	R	R	R	R	R	R

All information provided in this document is subject to legal disclaimers.

© NXP B.V. 2019. All rights reserved.

Table 41. DEVSTAT3 - device status register (address 04h) bit description

Bit	Symbol	Description
7	MISO_ERR	In SPI mode, the MISO data mismatch flag is set when a MISO Data mismatch fault occurs. The MISO_ERROR bit is cleared by a read of the DEVSTAT3 register through any communication interface, or by a status transmission including the error status through the SPI. **0 —** No error detected **1 —** MISO data mismatch
6	OSCTRAIN_ERR	The oscillator training error bit is set if an error detected in either the oscillator training settings, or the master communication timing. Once the error condition is corrected, the OSCTRAIN_ERR bit is cleared after a read of the OSCTRAIN_ERR bit through any communication interface, or by a status transmission including the error status through any communication interface. **0 —** No error detected **1 —** Oscillator training error

7.7.3 TEMPERATURE - temperature register (address 0Eh)

The temperature register is a read-only register that provides a temperature value for the IC. The temperature value is specified in the temperature sensor signal chain section of Table 101.

Note: *The device is only guaranteed to operate within the temperature limits specified in* Section 10 "Static characteristics ".

Table 42. TEMPERATURE - temperature register (address 0Eh) bit allocation

Bit	7	6	5	4	3	2	1	0
Symbol	TEMP[7:0]							
Reset	0	0	0	0	0	0	0	0
Access	R	R	R	R	R	R	R	R

7.7.4 DEVLOCK_WR - lock register writes register (address 10h)

The lock register writes register is a read/write register that contains the ENDINIT bit and reset control bits.

Table 43. DEVLOCK_WR - lock register writes register (address 10h) bit allocation

Bit	7	6	5	4	3	2	1	0
Symbol	ENDINIT	reserved	reserved	reserved	SUP_ERR_DIS	reserved	RESET[1:0]	
Factory default	0	0	0	0	0	0	0	0
Access	R/W	R/W	R/W	R/W	R/W	R/W	R/W	R/W

All information provided in this document is subject to legal disclaimers.

© NXP B.V. 2019. All rights reserved.

Table 44. DEVLOCK_WR - lock register writes register (address 10h) bit description

Bit	Symbol	Description
7	ENDINIT	The ENDINIT bit is a control bit used to indicate that the user has completed all device and system level initialization tests. Once the ENDINIT bit is set, writes to all writable register bits are inhibited except for the DEVLOCK_WR register. Once set, the ENDINIT bit can only be cleared by a device reset. When ENDINIT is set, the following occurs: • An error detection is enabled for all user writable registers. The error detection code is continuously calculated on the user writable registers and verified against a previously calculated error detection code. • Self-test is disabled and inhibited. • Register writes are inhibited with the exception of the RESET[1:0] bits in the DEVLOCK_WR register.
3	SUP_ERR_DIS	The supply error disable bit allows the user to disable reporting of the supply errors in the SPI status fields.
1 to 0	RESET[1:0]	To reset the device, three consecutive register write operations must be performed in the order shown in Table 45, or the device will not reset. The response to a register write returns the new register value, including the values written to the RESET[1:0] bits. After the third register write command, the device initiates a reset and thus does not transmit an acknowledge. The response to a register read returns '00' for RESET[1:0] and terminates the reset sequence. The reset control bits are not included in the read/write array error detection.

Table 45. Device reset command sequence

Register write to DEVLOCK_WR	RESET[0]	RESET[1]	Effect
Register write 1	0	0	No effect
Register write 2	1	1	No effect
Register write 3	0	1	Device RESET

7.7.5 UF_REGION_W, UF_REGION_R - UF region selection registers (address 14h, 15h)

The UF region load register is a user read/write register that contains the control bits for the UF0 and UF1 regions to be accessed. This register is included in the user read/write array error detection. The UF region active register is a read-only register that contains the status bits for the UF0 and UF1 regions to be accessed. This register is included in the user read/write array error detection.

The UF_REGION_W register is readable and writable in SPI mode or I^2C mode. The UF_REGION_R register is readable in SPI mode or I^2C mode.

Table 46. UF_REGION_W - UF region selection register (address 14h) bit allocation

Bit	7	6	5	4	3	2	1	0
Symbol	REGION_LOAD[3:0]				0	0	0	0
Factory default	1	1	1	0	0	0	0	0
Access	R/W	R/W	R/W	R/W	R/W	R/W	R/W	R/W

All information provided in this document is subject to legal disclaimers.

© NXP B.V. 2019. All rights reserved.

Table 47. UF_REGION_R - UF region selection register (address 15h) bit allocation

Bit	7	6	5	4	3	2	1	0
Symbol	REGION_ACTIVE[3:0]				0	0	0	0
Factory default	1	1	1	0	0	0	0	0
Access	R	R	R	R	R	R	R	R

The user OTP regions UF0, UF1, and F share a block of 16 registers. Prior to reading the registers via any communication interface, the user must ensure that the desired OTP registers are loaded into the readable registers. Below is the necessary procedure to ensure proper reading of the UF0, UF1, and F registers.

1. Write the desired address range to be read to the REGION_LOAD[3:0] bits in the UF_REGION_W register using one of the communication interfaces available via the COMMTYPE register.

Table 48. REGION_LOAD Bit Definitions

REGION_LOAD[3:0]				OTP register addresses loaded into the readable registers
0	0	0	0	not applicable
0	0	0	1	not applicable
0010 through 1001				reserved
1	0	1	0	Address Range $A0 through $AF
1	0	1	1	Address Range $B0 through $BF
1	1	0	0	Address Range $C0 through $CF
1	1	0	1	Address Range $D0 through $DF
1	1	1	0	Address Range $E0 through $EF
1	1	1	1	Address Range $F0 through $FF

2. Add a delay (Refer to appropriate Application Note for specific communication protocol for delay values)
3. Optional: Execute a register read of the UF_REGION_R register and confirm the REGION_ACTIVE[3:0] bits match the values written to the REGION_LOAD[3:0] bits in the UF_REGION_W register.

Table 49. REGION_ACTIVE Bit Definitions

REGION_ACTIVE[3:0]				OTP register addresses loaded into the readable registers
0	0	0	0	Load of OTP registers is in process
0	0	0	1	The contents of the shared registers has been over-written by the user
0010 through 1001				not applicable
1	0	1	0	Address Range $A0 through $AF
1	0	1	1	Address Range $B0 through $BF
1	1	0	0	Address Range $C0 through $CF
1	1	0	1	Address Range $D0 through $DF
1	1	1	0	Address Range $E0 through $EF
1	1	1	1	Address Range $F0 through $FF

4. Execute a Register Read of the desired registers from the UF0, UF1 or F register section. Complete all desired Register Reads of the selected UF Region.

All information provided in this document is subject to legal disclaimers.

© NXP B.V. 2019. All rights reserved.

5. Repeat steps 1 through 4 for the next desired UF region to read.

Notes:

- *The user must take care to ensure that the desired registers are addressed. For example, if the REGION_LOAD bits are set to Ah and the user executes a read of address $C2, the contents of registers $A2 will be transmitted. No error detection is included other than a read of the REGION_ACTIVE bits.*
- *For COMMTYPE options with multiple protocol options (COMMTYPE = '000' or '001'), no error detection is included other than a read of the REGION_ACTIVE bits. The user must take care to ensure that the REGION_LOAD bits are not inadvertently changed by an alternative protocol while executing register reads.*
- *In SPI and I^2C modes, once the ENDINIT bit is set, writes to registers other than the RESET[1:0] bits are inhibited. For this reason, reads of the UF0, UF1, and F registers will only be possible for the region selected by the REGION_ACTIVE bits at the time ENDINIT is set.*

7.7.6 COMMTYPE - communication type register (address 16h)

When writing to this register, care must be taken to prevent from inadvertently disabling the desired communication mode. Communication mode register value changes, that disable a protocol, including writes to OTP, will not take effect until a device reset occurs to prevent disabling a necessary communication method.

Table 50. COMMTYPE - communication type register (address 16h) bit allocation

Bit	7	6	5	4	3	2	1	0
Symbol	reserved	reserved	reserved	reserved	reserved	COMMTYPE[2:0]		
Access	R/W	R/W	R/W	R/W	R/W	R/W	R/W	R/W
Reset	0	0	0	0	0	0	0	0

Table 51. COMMTYPE - communication type register (address 16h) bit description

Bit	Symbol	Description	
2 to 0	COMMTYPE[2:0}	Communication protocol selection	
		000	32-bit SPI (no internal self-test, debug mode)
		001	32-bit SPI (with startup internal self-test)
		010	32-bit SPI (no internal self-test, debug mode)
		011	reserved
		100	32-bit SPI (no internal self-test, debug mode)
		101	reserved
		110	I^2C (pin 3 acts as an Interrupt)
		111	I^2C (pin 3 acts as an interrupt)

7.7.7 SOURCEID_x - source identification registers (address 1Ah, 1Bh)

The source identification registers are user programmed read/write registers that contain the source identification information used in SPI Mode. These registers are included in the read/write array error detection. These registers are readable and writable in SPI mode or I^2C mode.

All information provided in this document is subject to legal disclaimers.

© NXP B.V. 2019. All rights reserved.

Table 52. SOURCEID_0 - source identification register (address 1Ah) bit allocation

Bit	7	6	5	4	3	2	1	0
Symbol	SID0_EN	reserved	reserved	reserved	SOURCEID_0[3:0]			
Factory default	0	0	0	0	0	0	0	0
Access	R/W	R/W	R/W	R/W	R/W	R/W	R/W	R/W

Table 53. SOURCEID_1 - source identification register (address 1Bh) bit allocation

Bit	7	6	5	4	3	2	1	0
Symbol	SID1_EN	reserved	reserved	reserved	SOURCEID_1[3:0]			
Factory default	0	0	0	0	0	0	0	0
Access	R/W	R/W	R/W	R/W	R/W	R/W	R/W	R/W

7.7.8 TIMING_CFG - communication timing register (address 22h)

The communication timing configuration register is a user programmed read/write register that contains user-specific configuration information for protocol timing. This register is included in the read/write array error detection. This register is readable and writable in SPI mode or I^2C mode.

Table 54. TIMING_CFG - communication timing register (address 22h) bit allocation

Bit	7	6	5	4	3	2	1	0
Symbol	reserved			OSCTRAIN_ SEL	CK_CAL_ RST	reserved	reserved	CK_CAL_EN
Factory default	0	0	0	0	0	0	0	0
Access	R/W	R/W	R/W	R/W	R/W	R/W	R/W	R/W

7.7.9 SPI Configuration Control Register (SPI_CFG, Address 3Dh)

In SPI mode, the SPI configuration control register is a user programmed read/write register that contains the SPI protocol configuration information. This register is included in the read/write array error detection. This register is readable and writable in SPI mode or I^2C mode

Table 55. SPI_CFG Register (address 3Dh) bit allocation

Bit	7	6	5	4	3	2	1	0
Symbol	reserved	DATASIZE	SPI_CRC_LEN[1:0]		SPICRCSEED[3:0]			
Factory default	0	0	0	0	0	0	0	0
Access	R/W	R/W	R/W	R/W	R/W	R/W	R/W	R/W

7.7.9.1 SPI Data Field Size (DATASIZE)

The SPI data field size bit controls the size of the SPI data field as shown in Table 56.

Table 56. DATASIZE Bit Definition

DATASIZE	SPI Data Field Size
0	12-Bits
1	16-Bits

All information provided in this document is subject to legal disclaimers.

© NXP B.V. 2019. All rights reserved.

7.7.9.2 SPI CRC Length and Seed Bits

The SPI_CRC_LEN[1:0] bits select the CRC length for SPI Mode as shown in the table below. The SPI CRC seed bits contain the seed used for the SPI Mode. The default SPI CRC is an 8-bit. When the SPI_CRC_LEN[1:0] bits are set to a non-zero value using a Register Write command, the SPI CRC changes as defined in the table. The new polynomial value is enabled for both MISO and MOSI on the next SPI Mode command. The default seed (SPICRCSEED[3:0] = 0h) is FFh for an 8-bit CRC. When the value is changed to a non-zero value using a Register Write command, the SPI CRC seed changes to the value programmed as shown in the table. The new seed value is enabled for both MISO and MOSI on the next SPI Mode command.

Table 57. SPI CRC Definition

SPI_CRC_LEN[1:0]		SPICRCSEED	CRC Polynomial	CRC Seed
0	0	0	$x^8 + x^5 + x^3 + x^2 + x + 1$	1111, 1111
0	0	non-zero	$x^8 + x^5 + x^3 + x^2 + x + 1$	0000, SPICRCSEED[3:0]
0	1	0	$x^4 + 1$	1010
0	1	non-zero	$x^4 + 1$	SPICRCSEED[3:0]
1	0	0	$x^3 + x + 1$	111
1	0	non-zero	$x^3 + x + 1$	SPICRCSEED[2:0]
1	1	0	$x^3 + x + 1$	111
1	1	non-zero	$x^3 + x + 1$	SPICRCSEED[2:0]

7.7.10 WHO_AM_I - who am I register (address 3Eh)

The WHO_AM_I register is a user programmed read/write register that contains the unique product identifier. This register is included in the read/write array error detection.

Table 58. WHO_AM_I - device identification register (address 3Eh) bit allocation

Bit	7	6	5	4	3	2	1	0
Symbol	WHO_AM_I[7:0]							
Factory default (stored value)	0	0	0	0	0	0	0	0
Factory default (read value)	0	1	1	0	0	1	0	0
Access	R/W	R/W	R/W	R/W	R/W	R/W	R/W	R/W

The default register value is 00h. If the register value is 00h, a value of C4h is transmitted in response to a read command. For all other register values, the actual register value is transmitted in response to a read command.

Table 59. WHO_AM_I register values

WHO_AM_I register value (hex)	Response to a register read command
00h	C4h
01h to FFh	Actual register value

7.7.11 I2C_ADDRESS - I^2C slave address register (address 3Fh)

The I^2C slave address register is a user programmed read/write register that contains the unique I^2C slave address. The register is readable in all modes. This register is included in the read/write array error detection.

All information provided in this document is subject to legal disclaimers.

© NXP B.V. 2019. All rights reserved.

Table 60. I2C_ADDRESS - I²C slave address register (address 3Fh) bit allocation

Bit	7	6	5	4	3	2	1	0
Symbol	I2C_ADDRESS[7:0]							
Factory Default (stored value)	0	0	0	0	0	0	0	0
Factory Default (read value)	0	1	1	0	0	0	0	0
Access	R/W	R/W	R/W	R/W	R/W	R/W	R/W	R/W

The default register value is 00h. If the register value is 00h, the I²C slave address is 60h and a value of 60h is transmitted in response to a read command. If the register is written to a value other than 00h, the I²C slave address is the lower seven bits of the actual register value and the actual register value is transmitted in response to a read command.

7.7.12 DSP Configuration Registers (DSP_CFG_Ux)

The DSP Configuration registers (DSP_CFG_Ux) are a series of registers that affect the DSP data path.

There are 5 DSP Configuration registers, however, only DSP_CFG_U1, DSP_CFG_U4 and DSP_CFG_U5 are used when the device is in SPI or I²C mode. The DSP_CFG_U2 and DSP_CFG_U3 registers are for factory use only and are used for internal tests.

7.7.12.1 Self-test control bits

The self-test control bits select one of the various analog and digital self-test features of the device as shown in the table below. The self-test control bits are not included in the read/write array error detection.

Table 61. Self-Test Control Bits (ST_CTRL[3:0])

ST_ CTRL[3]	ST_ CTRL[2]	ST_ CTRL[1]	ST_ CTRL[0]	Function	SNS_DATAx_X Contents (16-bit data)
0	0	0	0	Normal Pressure Signal	16-bit Absolute Pressure Data
0	0	0	1	P-Cell Common Mode Verification	16-bit Absolute Pressure Data
0	0	1	0	reserved	reserved
0	0	1	1	reserved	reserved
0	1	0	0	DSP write to SNS_DATAx_X registers inhibited.	0000h
0	1	0	1	DSP write to SNS_DATAx_X registers inhibited.	AAAAh
0	1	1	0	DSP write to SNS_DATAx_X registers inhibited.	5555h
0	1	1	1	DSP write to SNS_DATAx_X registers inhibited.	FFFFh
1	0	0	0	reserved	reserved
1	0	0	1	reserved	reserved
1	0	1	0	reserved	reserved
1	0	1	1	reserved	reserved
1	1	0	0	Digital Self-Test 0	Digital Self-Test Output
1	1	0	1	Digital Self-Test 1	Digital Self-Test Output
1	1	1	0	Digital Self-Test 2	Digital Self-Test Output
1	1	1	1	Digital Self-Test 3	Digital Self-Test Output

All information provided in this document is subject to legal disclaimers.

© NXP B.V. 2019. All rights reserved.

7.7.12.2 DSP_CFG_U1 - DSP user configuration #1 register (address 40h)

The DSP user configuration register #1 is a user programmable read/write register that contains DSP-specific configuration information. This register is included in the read/write array error detection.

Changes to this register reset the DSP data path. The contents of the SNSDATA_x registers are not guaranteed until the DSP has completed initialization as specified in Table 102. Reads of the SNSDATA_x registers and sensor data requests should be prevented during this time.

Table 62. DSP_CFG_U1 - DSP user configuration #1 register (address 40h) bit allocation

Bit	7	6	5	4	3	2	1	0
Symbol	LPF[3:0]				reserved	reserved	USER_RANGE[1]	USER_RANGE[0]
Factory default	0	0	0	0	0	0	0	0
Access	R/W	R/W	R/W	R/W	R/W	R/W	R/W	R/W

Table 63. Low-pass filter selection bits (LPF[3:0])

LPF[3]	LPF[2]	LPF[1]	LPF[0]	Low Pass Filter Type
0	0	0	0	370 Hz, 2-Pole
0	0	0	1	400 Hz, 3 Pole
0	0	1	0	800 Hz, 4-Pole
0	1	0	0	1000 Hz, 4-Pole
0	1	0	1	reserved
0	1	1	0	reserved
0	1	1	1	reserved
1	0	0	0	reserved
1	x	x	x	reserved

Table 64. User range selection bits (USER_RANGE[1:0])

USER_RANGE[1]	USER_RANGE[0]	Absolute Pressure Range	Notes
0	0	reserved	For Internal use Only
0	1	reserved	For Internal use Only
1	0	reserved	For Internal use Only
1	1	reserved	For Internal use Only

7.7.12.3 DSP_CFG_U4 - DSP user configuration #4 register (address 43h)

The DSP user configuration register #4 is a user programmable read/write register that contains DSP-specific configuration information. This register is included in the read/write array error detection.

Table 65. DSP_CFG_U4 - DSP user configuration #4 register (address 43h) bit allocation

Bit	7	6	5	4	3	2	1	0
Symbol	reserved	reserved	reserved	reserved	reserved	INT_OUT	reserved	reserved
Reset	0	0	0	0	0	0	0	0
Access	R/W	R/W	R/W	R/W	R/W	R/W	R/W	R/W

All information provided in this document is subject to legal disclaimers.

© NXP B.V. 2019. All rights reserved.

Table 66. DSP_CFG_U4 - DSP user configuration #4 register (address 43h) bit description

Bit	Symbol	Description
7 to 4	reserved	These bits are reserved.
2	INT_OUT	The interrupt pin configuration bit selects the mode of operation for the interrupt pin. **0 —** Open drain, active high with pull-down current **1 —** Open drain, active low with pullup current
1 to 0	reserved	These bits are reserved.

7.7.12.4 DSP_CFG_U5 - DSP user configuration #5 register (address 44h)

The DSP user configuration register #5 is a read/write register that contains DSP-specific configuration information. This register is included in the read/write array error detection.

Table 67. DSP_CFG_U5 - DSP user configuration #5 register (address 44h) bit allocation

Bit	7	6	5	4	3	2	1	0
Symbol	ST_CTRL[3:0]				reserved			
Factory default	0	0	0	0	0	0	0	0
Access	R/W	R/W	R/W	R/W	R/W	R/W	R/W	R/W

Table 68. DSP_CFG_U5 - DSP user configuration #5 register (address 44h) bit description

Bit	Symbol	Description
7 to 4	ST_CTRL[3:0]	The self-test control bits select one of the various analog and digital self-test features of the device as shown in Table 69. The self-test control bits are not included in the read/write array error detection.
3 to 0	reserved	These bits are reserved.

Table 69. Self-test control bits

ST_CTRL[3]	ST_CTRL[2]	ST_CTRL[1]	ST_CTRL[0]	Function	SNS_DATAx_X contents 16-bit data
0	0	0	0	Normal pressure signal	reserved
0	0	0	1	P-cell common mode verification	reserved
0	0	1	0	reserved	reserved
0	0	1	1	reserved	reserved
0	1	0	0	DSP write to SNS_DATAx_X registers inhibited.	0000h
0	1	0	1	DSP write to SNS_DATAx_X registers inhibited.	AAAAh
0	1	1	0	DSP write to SNS_DATAx_X registers inhibited.	5555h
0	1	1	1	DSP write to SNS_DATAx_X registers inhibited.	FFFFh
1	0	0	0	reserved	reserved
1	0	0	1	reserved	reserved
1	0	1	0	reserved	reserved
1	0	1	1	reserved	reserved
1	1	0	0	Digital self-test 0	8171h
1	1	0	1	Digital self-test 1	6C95h
1	1	1	0	Digital self-test 2	807Ah
1	1	1	1	Digital self-test 3	78ACh

All information provided in this document is subject to legal disclaimers.

© NXP B.V. 2019. All rights reserved.

7.7.13 INT_CFG - interrupt configuration register (address 45h)

The interrupt configuration register contains configuration information for the interrupt output. This register can be written during initialization but is locked once the ENDINIT bit is set (see Section 7.7.4 "DEVLOCK_WR - lock register writes register (address 10h)"). The register is included in the read/write array error detection.

Table 70. INT_CFG - interrupt configuration register (address 45h) bit allocation

Bit	7	6	5	4	3	2	1	0
Symbol	reserved		INT_PS[1:0]		INT_POLARITY	reserved		
Reset	0	0	0	0	0	0	0	0
Access	R/W	R/W	R/W	R/W	R/W	R/W	R/W	R/W

Table 71. INT_CFG - interrupt configuration register (address 45h) bit description

Bit	Symbol	Description
5 to 4	INT_PS[1:0]	The INT_PS[1:0] bits set the programmable pulse stretch time for the interrupt output. Pulse stretch times are derived from the internal oscillator, so the tolerance on this oscillator applies. **00 —** 0 ms **01 —**16.000 ms to 16.512 ms **10 —** 64.000 ms to 64.512 ms **11 —** 256.000 ms to 256.512 ms If the pulse stretch function is programmed to '00', the interrupt pin is asserted if and only if the interrupt condition exists after the most recent evaluated sample. The interrupt pin is deasserted if and only if an interrupt condition does not exist after the most recent evaluated sample. If the pulse stretch function is programmed to a non-zero value, the interrupt pin is controlled only by the value of the pulse stretch timer value. If the pulse stretch timer value is non-zero, the interrupt pin is asserted. If the pulse stretch timer is zero, the interrupt pin is deasserted. The pulse stretch counter continuously decrements until it reaches zero. The pulse stretch counter is reset to the programmed pulse stretch value if and only if an interrupt condition exists after the most recent evaluated sample.
3	INT_POLARITY	The interrupt polarity bit controls whether the interrupt is activated for values within or outside of the window selected by the high and low threshold registers. With this bit and the programmable thresholds, a window comparator can be programmed for activation either within or outside of a window. **0 —** Interrupt activated, if the value is outside the window **1 —** Interrupt activated, if the value is inside the window

7.7.14 P_INT_HI, P_INT_LO - interrupt window comparator threshold registers (address 46h to 49h)

The interrupt threshold registers contain the high and low window comparator thresholds for pressure to be used to activate and deactivate the interrupt output. These registers can be written during initialization but are locked once the ENDINIT bit is set (see Section 7.7.4 "DEVLOCK_WR - lock register writes register (address 10h)"). The register is included in the read/write array error detection.

Table 72. P_INT_HI, P_INT_LO - interrupt window comparator threshold registers (address 46h to 49h) bit allocation

Location		Bit								
Address	**Register**	**8**	**7**	**6**	**5**	**4**	**3**	**2**	**1**	**0**
46h	PIN_INT_HI_L	PIN_INT_HI[7:0]								
47h	PIN_INT_HI_H	PIN_INT_HI[15:8]								
48h	PIN_INT_LO_L	PIN_INT_LO[7:0]								
49h	PIN_INT_LO_H	PIN_INT_LO[15:8]								
Reset		0	0	0	0	0	0	0	0	0
Access		R/W	R/W	R/W	R/W	R/W	R/W	R/W	R/W	R/W

All information provided in this document is subject to legal disclaimers.

© NXP B.V. 2019. All rights reserved.

The pressure threshold registers hold independent unsigned 16-bit values for a high and a low threshold. The window comparator threshold alignment is shown in Section 7.3.4.4 "Absolute pressure output data scaling equation".

If either the high or low threshold is programmed to 0000h, comparisons are disabled for that threshold only. The interrupt comparison still functions for the opposite threshold. If both the high and low thresholds are programmed to 0000h, the interrupt output is disabled.

7.7.15 P_CAL_ZERO - pressure calibration registers (address 4Ch, 4Dh)

The pressure calibration registers contain user programmable values to adjust the offset of the absolute pressure.

These registers can be written during initialization but are locked once the ENDINIT bit is set (see Section 7.7.4 "DEVLOCK_WR - lock register writes register (address 10h)"). These registers are included in the read/write array error detection. Changes to these registers reset the DSP data path. The contents of the SNSDATA_x registers are not guaranteed until the DSP has completed initialization, as specified in Table 102. Reads of the SNSDATA_x registers and sensor data requests should be prevented during this time.

Table 73. P_CAL_ZERO - pressure calibration registers (address 4Ch, 4Dh) bit allocation

Location		Bit							
Address	**Register**	**7**	**6**	**5**	**4**	**3**	**2**	**1**	**0**
4Ch	P_CAL_ZERO_L	P_CAL_ZERO[7:0]							
4Dh	P_CAL_ZERO_H	P_CAL_ZERO[15:8]							
Reset		0	0	0	0	0	0	0	0
Access		R/W	R/W	R/W	R/W	R/W	R/W	R/W	R/W

The P_CAL_ZERO register value is a signed 16-bit value that is directly added to the internally calibrated pressure signal value as shown in Equation 6. The equation applies to the values in the 16-bit SNSDATA registers.

$$PABS_{kPa} = \left[\frac{PABS_{LSB} - PABSOFF_{LSB} + UserOffset}{PABS_{SENSE} \times UserGain}\right] \quad (6)$$

Where:

$PABS_{kPa}$ = The absolute pressure output in kPa
$PABS_{LSB}$ = The internal trimmed absolute pressure output in LSB
$PABSOFF_{LSB}$ = The internal trimmed absolute pressure output value at 0 kPa in LSB
$PABS_{SENSE}$ = The trimmed absolute pressure sensitivity in LSB/kPa
UserOffset = The 16-bit signed value programmed into the P_CAL_ZERO register

Note: *The pressure calibration registers enable range and resolution options beyond the specified values of the device. The user must take care to ensure that the value stored in this register does not result in a compressed output range or a railed output.*

All information provided in this document is subject to legal disclaimers.

© NXP B.V. 2019. All rights reserved.

7.7.16 DSP_STAT - DSP-specific status register (address 60h)

The DSP status register is a read-only register that contains sensor data-specific status information.

Table 74. DSP_STAT - DSP-specific status register (address 60h) bit allocation

Bit	7	6	5	4	3	2	1	0
Symbol	reserved	PABS_HIGH	PABS_LOW	reserved	ST_INCMPLT	ST_ACTIVE	CM_ERROR	ST_ERROR
Factory default	0	0	0	0	1	0	0	0
Access	R	R	R	R	R	R	R	R

Table 75. DSP_STAT - DSP-specific status register (address 60h) bit description

Bit	Symbol	Description
6	PABS_HIGH	The absolute pressure out-of-range high status bit is set if the absolute pressure exceeds the absolute pressure out-of-range high limit. The PABS_HIGH bit is cleared on a read of the DSP_STAT register through any communication interface or on a data transmission that includes the error in the status field.
5	PABS_LOW	The absolute pressure out-of-range low status bit is set if the absolute pressure exceeds the absolute pressure out-of-range low limit. The PABS_LOW bit is cleared on a read of the DSP_STAT register through any communication interface or on a data transmission that includes the error in the status field.
3	ST_INCMPLT	The self-test incomplete bit is set after a device reset and is only cleared when one of the analog or digital self-test modes is enabled in the ST_CTRL register (`ST_CTRL[3] = '1' | ST_CTRL[2] = '1' | | ST_CTRL[1] = '1' | | ST_CTRL[0] = '1'`). **0 —** An analog or digital self-test has been activated since the last reset. **1 —** No analog or digital self-test has been activated since the last reset.
2	ST_ACTIVE	The self-test active bit is set if any self-test mode is currently active. The self-test active bit is cleared when no self-test mode is active. `ST_ACTIVE= ST_CTRL[3] | ST_CTRL[2] | ST_CTRL[1] | ST_CTRL[0]`
1	CM_ERROR	The absolute pressure common mode error status bit is set if the common mode value of the analog front end exceeds predetermined limits. The CM_ERROR bit is cleared on a read of the DSP_STAT register through any communication interface or on a data transmission that includes the error in the status field.
0	ST_ERROR	The self-test error flag is set if an internal self-test fails as described in Section 7.3.2. This bit can only be cleared by a device reset.

7.7.17 DEVSTAT_COPY - device status copy register (address 61h)

The device status copy register is a read-only register that contains a copy of the device status information contained in the DEVSTAT register. See Section 7.7.2.1 "DEVSTAT - device status register (address 01h)" for details regarding the DEVSTAT register contents. A read of the DEVSTAT_COPY register has the same effect as a read of the DEVSTAT register.

Table 76. DEVSTAT_COPY - device status copy register (address 61h) bit allocation

Bit	7	6	5	4	3	2	1	0
Symbol	DSP_ERR	reserved	COMM_ERR	MEMTEMP_ERR	SUPPLY_ERR	TESTMODE	DEVRES	DEVINIT
Reset	0	0	0	0	0	0	0	0
Access	R	R	R	R	R	R	R	R

7.7.18 SNSDATA0_L, SNSDATA0_H - sensor data #0 registers (address 62h, 63h)

The sensor data #0 registers are read-only registers that contain the 16-bit sensor data. See Section 7.3.4.4 "Absolute pressure output data scaling equation" for details regarding the 16-bit sensor data.

The SNSDATA0_H register value is latched on a read of the SNSDATA0_L register value until the SNSDATA0_H register is read. To avoid data mismatch, the user is

All information provided in this document is subject to legal disclaimers.

© NXP B.V. 2019. All rights reserved.

required to always read the registers in sequence, SNSDATA0_L register first, followed by the SNSDATA0_H register.

Table 77. SNSDATA0_L, SNSDATA0_H - sensor data #0 registers (addresses 62h, 63h) bit allocation

Location		Bit							
Address	**Symbol**	**7**	**6**	**5**	**4**	**3**	**2**	**1**	**0**
62h	SNSDATA0_L	SNSDATA0_L[7:0]							
63h	SNSDATA0_H	SNSDATA0_H[15:8]							
Factory default		0	0	0	0	0	0	0	0
Access		R	R	R	R	R	R	R	R

7.7.19 SNSDATA1_L, SNSDATA1_H - sensor data #1 registers (address 64h, 65h)

The sensor data #1 registers are read-only registers that contain the 16-bit sensor data. See Section 7.3.4.4 "Absolute pressure output data scaling equation" for details regarding the 16-bit sensor data.

The SNSDATA1_H register value is latched on a read of the SNSDATA1_L register value until the SNSDATA1_H register is read. To avoid data mismatch, the user is required to always read the registers in sequence, SNSDATA1_L register first, followed by the SNSDATA1_H register.

Table 78. SNSDATA1_L, SNSDATA1_H - sensor data #1 registers (address 64h, 65h) bit allocation

Location		Bit							
Address	**Symbol**	**7**	**6**	**5**	**4**	**3**	**2**	**1**	**0**
64h	SNSDATA1_L	SNSDATA1_L[7:0]							
65h	SNSDATA1_H	SNSDATA1_H[15:8]							
Factory default		0	0	0	0	0	0	0	0
Access		R	R	R	R	R	R	R	R

7.7.20 SNSDATA0_TIMEx - time stamp registers (address 66h to 6Bh)

The sensor data 0 time stamp registers are read-only registers that contain a 48-bit time stamp.

The value of the 48-bit free running timer register is copied to the sensor data 0 time stamp registers each time sensor data 0 data is latched for transmission. The time stamp is updated at the start of the sensor data 0 register value transmission for a register read of the SNSDATA0_L register.

The time stamp register is organized to allow for optimized reading of the time stamp in I^2C automatic sensor data register read wrap-around mode as documented in Table 8.

The sensor data 0 time stamp registers are read-only registers that contain a 48-bit time stamp.

The value of the 48-bit free running timer register is copied to the sensor data 0 time stamp registers each time sensor data 0 data is latched for transmission via SPI.

All information provided in this document is subject to legal disclaimers.

© NXP B.V. 2019. All rights reserved.

Table 79. SNSDATA0_TIMEx - time stamp register (address 66h to 6Bh) bit allocation

Location		Bit							
Address	**Symbol**	**7**	**6**	**5**	**4**	**3**	**2**	**1**	**0**
66h	SNSDATA0_TIME0	SNSDATA0_TIME[7:0]							
67h	SNSDATA0_TIME1	SNSDATA0_TIME[15:8]							
68h	SNSDATA0_TIME2	SNSDATA0_TIME[23:16]							
69h	SNSDATA0_TIME3	SNSDATA0_TIME[31:24]							
6Ah	SNSDATA0_TIME4	SNSDATA0_TIME[39:32]							
6Bh	SNSDATA0_TIME5	SNSDATA0_TIME[47:40]							
Factory default		0	0	0	0	0	0	0	0
Access		R	R	R	R	R	R	R	R

7.7.21 P_MAX, P_MIN - maximum and minimum absolute pressure value registers (address 6Ch to 6Fh)

The minimum and maximum absolute pressure value registers are read-only registers that contain a sample-by-sample continuously updated minimum and maximum 16-bit absolute pressure value. The value is reset to 0000h on a write to a DSP_CFG_U1 register that changes the value of the `LPF[2:0] or ST_CTRL[3:0]`.

These registers are readable in SPI mode or I^2C mode. In I^2C mode the P_xxx_H register value is latched on a read of the P_xxx_L register value until the P_xxx_H register is read. To avoid data mismatch, the user is required to always read the registers in sequence, P_xxx_L register first, followed by the P_xxx_H register.

Table 80. P_Max and P_Min registers (address 6Ch to 6Fh) bit allocation

Location		Bit							
Address	**Symbol**	**7**	**6**	**5**	**4**	**3**	**2**	**1**	**0**
6Ch	P_MAX_L	P_MAX[7:0]							
6Dh	P_MAX_H	P_MAX[15:8]							
6Eh	P_MIN_L	P_MIN[7:0]							
6Fh	P_MIN_H	P_MIN[15:8]							
Factory default		0	0	0	0	0	0	0	0
Access		R	R	R	R	R	R	R	R

7.7.22 FRT - free running timer registers (addresses 78h to 7Dh)

The free running timer registers are read-only registers that contain a 48-bit free running timer. The free running timer is clocked by the main oscillator frequency and increments every 100 ns.

Table 81. FRT - free running timer registers (addresses 78h to 7Dh) bit allocation

Location		Bit							
Address	**Symbol**	**7**	**6**	**5**	**4**	**3**	**2**	**1**	**0**
78h	FRT0	FRT[7:0]							
79h	FRT1	FRT[15:8]							
7Ah	FRT2	FRT[23:16]							
7Bh	FRT3	FRT[31:24]							
7Ch	FRT4	FRT[39:32]							
7Dh	FRT5	FRT[47:40]							
Access		R	R	R	R	R	R	R	R

All information provided in this document is subject to legal disclaimers.

© NXP B.V. 2019. All rights reserved.

7.7.23 DSP_CFG_F Register

The DSP configuration register is a factory programmable OTP register that contains DSP-specific configuration information. This register is included in the factory programmed OTP array error detection. This register is readable in SPI mode or I^2C mode when ENDINIT is not set.

Table 82. Range Indication Bits (RANGE[3:0])

RANGE[3]	RANGE[2]	RANGE[1]	RANGE[0]	Absolute Pressure Range (kPa)
0	0	0	0	Rated Pressure Range
0	0	0	1	reserved
0	0	1	0	reserved
0	0	1	1	reserved
0	1	0	0	reserved
0	1	0	1	reserved
0	1	1	0	reserved
0	1	1	1	reserved
1	0	0	0	reserved
1	0	0	1	reserved
1	0	1	0	reserved
1	0	1	1	reserved
1	1	0	0	reserved
1	1	0	1	reserved
1	1	1	0	reserved
1	1	1	1	reserved

7.7.24 IC type register (Address C0h)

The IC type register is a factory programmable OTP register that contains the IC type as defined below. This register is included in the factory programmed OTP array error detection. This register is readable in SPI mode or I^2C mode when ENDINIT is not set.

Table 83. IC TYPE REGISTER (ICTYPEID address C0h) bit allocation

Bit	7	6	5	4	3	2	1	0
Symbol	ICTYPEID[7:0]							
Reset	0	0	0	0	0	0	1	0
Access	R	R	R	R	R	R	R	R

7.7.25 IC manufacturer revision register (Address C1h)

The IC manufacturer revision register is a factory programmable OTP register that contains the IC revision. The upper nibble contains the main IC revision. The lower nibble contains the sub IC revision. This register is included in the factory programmed OTP array error detection. This register is readable in SPI mode or I^2C mode when ENDINIT is not set.

Table 84. IC MANUFACTURER REVISION REGISTER (ICREVID address C1h) bit allocation

Bit	7	6	5	4	3	2	1	0
Symbol	ICREVID[7:0]							
Reset	N/A	N/A	N/A	N/A	N/A	N/A	N/A	N/A
Access	R	R	R	R	R	R	R	R

All information provided in this document is subject to legal disclaimers.

© NXP B.V. 2019. All rights reserved.

7.7.26 IC manufacturer identification register (address C2h)

The IC manufacturer identification register is a factory programmable OTP register that identifies NXP as the IC manufacturer. This register is included in the factory programmed OTP array error detection. This register is readable in SPI mode or I^2C mode when ENDINIT is not set.

Table 85. IC MANUFACTURER IDENTIFICATION REGISTER (ICMFGID address C2h) bit allocation

Bit	7	6	5	4	3	2	1	0
Symbol	ICMFGID[7:0]							
Reset	0	0	0	0	0	0	1	0
Access	R	R	R	R	R	R	R	R

7.7.27 Part number register (address C4h, C5h)

The part number registers are factory programmed OTP registers that include the numeric portion of the device part number. These registers are included in the factory programmed OTP array error detection. These registers are readable in SPI mode or I^2C mode when ENDINIT is not set.

Table 86. PN0 Register (address C4h) bit allocation

Bit	7	6	5	4	3	2	1	0
Symbol	PN0[7:0]							
Reset	N/A	N/A	N/A	N/A	N/A	N/A	N/A	N/A
Access	R	R	R	R	R	R	R	R

Table 87. PN1 Register (address C5h) bit allocation

Bit	7	6	5	4	3	2	1	0
Symbol	PN1[7:0]							
Reset	N/A	N/A	N/A	N/A	N/A	N/A	N/A	N/A
Access	R	R	R	R	R	R	R	R

7.7.28 Device serial number registers

The serial number registers are factory programmed OTP registers that include the unique serial number of the device. Serial numbers begin at 1 for all produced devices in each lot and are sequentially assigned. Lot numbers begin at 1 and are sequentially assigned. No lot will contain more devices than can be uniquely identified by the 14-bit serial number. Depending on lot size and quantities, all possible lot numbers and serial numbers might not be assigned. These registers are included in the factory programmed OTP array error detection. These registers are readable in SPI mode or I^2C mode when ENDINIT is not set.

Table 88. SN0 Register (address C6h) bit allocation

Bit	7	6	5	4	3	2	1	0
Symbol	SN[7:0]							
Reset	N/A	N/A	N/A	N/A	N/A	N/A	N/A	N/A
Access	R	R	R	R	R	R	R	R

All information provided in this document is subject to legal disclaimers.

© NXP B.V. 2019. All rights reserved.

Table 89. SN1 Register (address C7h) bit allocation

Bit	7	6	5	4	3	2	1	0
Symbol	SN[7:0]							
Reset	N/A	N/A	N/A	N/A	N/A	N/A	N/A	N/A
Access	R	R	R	R	R	R	R	R

Table 90. SN2 Register (address C8h) bit allocation

Bit	7	6	5	4	3	2	1	0
Symbol	SN[7:0]							
Reset	N/A	N/A	N/A	N/A	N/A	N/A	N/A	N/A
Access	R	R	R	R	R	R	R	R

Table 91. SN3 Register (address C9h) bit allocation

Bit	7	6	5	4	3	2	1	0
Symbol	SN[7:0]							
Reset	N/A	N/A	N/A	N/A	N/A	N/A	N/A	N/A
Access	R	R	R	R	R	R	R	R

Table 92. SN4 Register (address CAh) bit allocation

Bit	7	6	5	4	3	2	1	0
Symbol	SN[7:0]							
Reset	N/A	N/A	N/A	N/A	N/A	N/A	N/A	N/A
Access	R	R	R	R	R	R	R	R

7.7.29 ASIC wafer ID registers

The ASIC wafer ID registers are factory programmed OTP registers that include the wafer number, wafer X and Y coordinates and the wafer lot number for the device ASIC. These registers are included in the factory programmed OTP array error detection. These registers are readable in SPI mode or I^2C mode when ENDINIT is not set.

Table 93. ASICWFR# Register (address CBh) bit allocation

Bit	7	6	5	4	3	2	1	0
Symbol	ASICWFR#[7:0]							
Reset	N/A	N/A	N/A	N/A	N/A	N/A	N/A	N/A
Access	R	R	R	R	R	R	R	R

Table 94. ASICWFR_X Register (address CCh) bit allocation

Bit	7	6	5	4	3	2	1	0
Symbol	ASICWFR_X[7:0]							
Reset	N/A	N/A	N/A	N/A	N/A	N/A	N/A	N/A
Access	R	R	R	R	R	R	R	R

All information provided in this document is subject to legal disclaimers.

© NXP B.V. 2019. All rights reserved.

Table 95. ASICWFR_Y Register (address CDh) bit allocation

Bit	7	6	5	4	3	2	1	0
Symbol	ASICWFR_Y[7:0]							
Reset	N/A	N/A	N/A	N/A	N/A	N/A	N/A	N/A
Access	R	R	R	R	R	R	R	R

Table 96. ASICWLOT_L Register (address D0h) bit allocation

Bit	7	6	5	4	3	2	1	0
Symbol	ASICWLOT_L[7:0]							
Reset	N/A	N/A	N/A	N/A	N/A	N/A	N/A	N/A
Access	R	R	R	R	R	R	R	R

Table 97. ASICWLOT_H Register (address D1h) bit allocation

Bit	7	6	5	4	3	2	1	0
Symbol	ASICWLOT_H[7:0]							
Reset	N/A	N/A	N/A	N/A	N/A	N/A	N/A	N/A
Access	R	R	R	R	R	R	R	R

7.7.30 USERDATA_0 to USERDATA_E - user data registers

User data registers are user programmable OTP registers that contain user-specific information. These registers are included in the user programmed OTP array error detection. These registers are readable and writable in SPI mode or I^2C mode when ENDINIT is not set.

7.7.31 USERDATA_10 to USERDATA_1E - user data registers

User data registers are user programmable OTP registers that contain user-specific information. These registers are included in the user programmed OTP array error detection. These registers are readable and writable in SPI mode or I^2C mode when ENDINIT is not set.

7.7.32 Lock and CRC Registers

The lock and CRC Registers are automatically programmed OTP registers that include the lock bit, the block identifier, and the block OTP array CRC use for error detection. These registers are automatically programmed when the corresponding data array is programmed to OTP using the Write OTP Enable register.

All information provided in this document is subject to legal disclaimers.

© NXP B.V. 2019. All rights reserved.

Table 98. Lock and CRC Register bit definitions

Location		Bit							
Address	Register	7	6	5	4	3	2	1	0
$5F	CRC_UF2	LOCK_UF2	0	0	0	CRC_UF2[3:0]			
Factory Default		0	0	0	0	0	0	0	0
$AF	CRC_F_A	LOCK_F_A	REGA_BLOCKID[2:0]			CRC_F_A[3:0]			
Factory Default		1	0	0	1	varies			
$BF	CRC_F_B	LOCK_F_B	REGB_BLOCKID[2:0]			CRC_F_B[3:0]			
Factory Default		1	0	1	0	varies			
$CF	CRC_F_C	LOCK_F_C	REGC_BLOCKID[2:0]			CRC_F_C[3:0]			
Factory Default		1	0	1	1	varies			
$DF	CRC_F_D	LOCK_F_D	REGD_BLOCKID[2:0]			CRC_F_D[3:0]			
Factory Default		1	1	0	1	varies			
$EF	CRC_F_E	LOCK_F_E	REGE_BLOCKID[2:0]			CRC_F_E[3:0]			
Factory Default		0	0	0	0	0	0	0	0
$FF	CRC_F_F	LOCK_F_F	REGF_BLOCKID[2:0]			CRC_F_F[3:0]			
Factory Default		0	0	0	0	0	0	0	0

7.7.33 Reserved registers

A register read command to a reserved register or a register with reserved bits results in a valid response. The data for reserved bits may be '0' or '1'.

A register write command to a reserved register or a register with reserved bits executes and results in a valid response. The data for the reserved bits may be '0' or '1'. A write to the reserved bits must always be '0' for normal device operation and performance.

7.7.34 Invalid register addresses

A register read command to a register address outside of the addresses listed in Section 7.6 "User-accessible data array" results in a valid response. The data for the registers will be '00h'.

A register write command to a register address outside of the addresses listed in Section 7.6 "User-accessible data array" will not execute, but results in a valid response. The data for the registers will be '00h'.

A register write command to a read-only register will not execute, but results in a valid response. The data for the registers is the current content of the registers.

7.8 Read/write register array CRC verification

The writable registers (all registers with the exception of the DEVLOCK_WR register) are verified by a continuous 4-bit CRC that is calculated on the entire array once ENDINIT is set. The CRC verification uses a generator polynomial of $g(x) = X^4 + X^3 + 1$, with a seed value = '0000'.

All information provided in this document is subject to legal disclaimers.

© NXP B.V. 2019. All rights reserved.

8 Maximum ratings

Absolute maximum ratings are the limits the device can be exposed to without permanently damaging it. Absolute maximum ratings are stress ratings only; functional operation at these ratings is not guaranteed. Exposure to absolute maximum ratings conditions for extended periods might affect device reliability.

This device contains circuitry to protect against damage due to high static voltage or electrical fields. NXP advises that normal precautions be taken to avoid application of any voltages higher than maximum-rated voltages to this high-impedance circuit.

Table 99. Maximum ratings

Symbol	Parameter	Conditions		Min	Max	Unit
VCC_{MAX}	Supply Voltage	V_{CC}, V_{CCIO}	[1]	—	+6.0	V
h_{DROP}	Drop shock	To concrete, tile or steel surface, 10 drops, any orientation	[2]	—	1.2	m
T_{stg}	Temperature range	Storage	[2]	–40	+130	°C
T_J		Junction	[2] [3]	–40	+150	°C
P_{MAX}	Maximum absolute pressure	Continuous (tested at 10 s)	[1]	—	150	kPa
P_{BURST}		Burst (tested at 100 ms)	[1]	—	345	kPa
P_{MIN}	Minimum absolute pressure	Continuous	[1]	—	40	kPa
f_{SEAL}	Pressure sealing force	Applied to top face of package	[1]	—	10	N
θ_{JA}	Thermal resistance		[4]	—	120	°C/W
ESD and latch-up protection characteristics						
V_{ESD}	Electrostatic discharge (per AEC-Q100, Rev H)	Human body model (HBM)	[2]	–2000	2000	V
V_{ESD}		Charge device model (CDM)	[2] [5]	–500	500	V

[1] Parameter verified by parametric and functional validation.
[2] Parameter verified by qualification testing (Per AEC-Q100 Rev H or per NXP specification).
[3] Functionality verified by modeling, simulation and/or design verification.
[4] Thermal resistance provided with device mounted to a two-layer, 1.6 mm FR-4 PCB as documented in AN1902 with one signal layer and one ground layer.
[5] CDM tested at ±750 V for corner pins and ±500 V for all other pins.

Caution

This device is sensitive to mechanical shock. Improper handling can cause permanent damage to the part.

Caution

This is an ESD sensitive device. Improper handling can cause permanent damage to the part.

All information provided in this document is subject to legal disclaimers.

© NXP B.V. 2019. All rights reserved.

9 Operating range

Table 100. Electrical characteristics — supply and I/O

$V_{CC_min} \leq (V_{CC} - V_{SS}) \leq V_{CC_max}$, $T_L \leq T_A \leq T_H$, $\Delta T \leq 25$ °C/min, unless otherwise specified.

Symbol	Parameter	Conditions		Min	Max	Units
V_{CC}	Supply voltage	Measured at V_{CC}	[1]	3.10	5.25	V
T_A	Operating temperature range	V_{CC} = 5.0 V, unless otherwise stated. Production tested operating temperature range	[1]	T_L –40	T_H +130	°C
T_A		Guaranteed operating temperature range	[1]	–40	+130	°C
$V_{CC_RAMP_SPI}$	Supply power on ramp rate		[2]	0.00001	10	V/µs

[1] Parameter tested 100 % at final test.
[2] Parameter verified by parametric and functional validation.

10 Static characteristics

Table 101. Static characteristics

$V_{CC_min} \leq (V_{CC} - V_{SS}) \leq V_{CC_max}$, $T_L \leq T_A \leq T_H$, $\Delta T \leq 25$ °C/min, unless otherwise specified.

Symbol	Parameter	Condition		Min	Typ	Max	Units
Supply and I/O							
I_{IH}	Input current high	At V_{IH}; SCLK/SCL	[1]	10	20	70	µA
I_{IL}	Input current low	At V_{IL}; SS_B	[1]	–70	–20	–10	µA
I_{MISO_Lkg}	MISO output leakage		[1]	–5	—	5	µA
I_q	Quiescent supply current	V_{CC} = 5.0 V	[1]	—	—	8.0	mA
$V_{CC_UV_F}$	Low-voltage detection threshold	V_{CC} falling	[1]	2.64	2.74	2.84	V
V_{I_HYST}	Input voltage hysteresis	SCLK/SCL, SS_B, MOSI	[2]	0.125	—	0.500	V
V_{IH}	Input high voltage (at V_{CC} = 3.3 V	SCLK/SCL, SS_B, MOSI	[1]	2.0	—	—	V
V_{IL}	Input low voltage	SCLK/SCL, SS_B, MOSI	[1]	—	—	1.0	V
V_{INT_OH}	Output high voltage	I_{Load} = –100 µA	[3]	V_{CC} – 0.35	—	V_{CC}	V
V_{INT_OL}	Output low voltage	I_{Load} = 100 µA	[3]	—	—	0.1	V
V_{OH}	Output high voltage	MISO/SDA, I_{Load} = –1 mA	[1]	V_{CC} – 0.2	—	—	V
Temperature sensor signal chain							
T_{RANGE}	Temperature measurement range		[3]	–50	—	+160	°C
T_{25}	Temperature output	At 25 °C	[3]	83	93	103	LSB
T_{RANGE}	Range of output (8-bit)	Unsigned temperature	[3]	0	—	255	LSB
T_{SENSE}	Temperature output sensitivity (8-bit)		[4]	—	1.00	—	LSB/°C
T_{ACC}	Temperature output accuracy (8-bit)		[4]	–10	—	+10	°C
T_{RMS}	Temperature output noise RMS (8-bit)	Standard deviation of 50 readings, f_{Samp} = 8 kHz	[4]	—	—	+2	LSB
Absolute pressure sensor signal chain							
P_{ABS}	Absolute pressure range		[2]	40	—	115	kPa
P_{SENS}	Absolute pressure output sensitivity	P_CAL_ZERO = 0h Temperature = –40 °C and 130 °C, V_{CC} = 5.0 V. 12-bit at 0 Hz, tested at P_{ABS} = 100 kPa ± 10 % and 110 kPa ± 10 %	[5]	—	46.64	—	LSB/kPa

All information provided in this document is subject to legal disclaimers.

© NXP B.V. 2019. All rights reserved.

Symbol	Parameter	Condition		Min	Typ	Max	Units
P_{ACC_LoT1}	Absolute pressure accuracy[6]	V_{CC} = 5.0 V –40 °C ≤ T_A < –20 °C	[5] [7]	–2.0	—	+2.0	kPa
P_{ACC_LoT2}	Absolute pressure accuracy[6]	V_{CC} = 5.0 V –20 °C ≤ T_A < 0 °C	[5] [7]	–1.75	—	+1.75	kPa
P_{ACC_Typ}	Absolute pressure accuracy[6]	V_{CC} = 5.0 V 0 °C ≤ T_A≤ 85 °C	[5] [7]	–1.25	—	+1.25	kPa
P_{ACC_HiT}	Absolute pressure accuracy[6]	V_{CC} = 5.0 V 85 °C < T_A ≤ 130 °C	[5] [7]	–2.0	—	+2.0	kPa
P_{ABS_DErr}	Absolute pressure output range	Digital error response	[2]	—	0	—	LSB
P_{ABS_DRng}	Absolute pressure output range	Digital, 12-bit	[2]	1	—	4095	LSB
P_{ABS_DRng}	Absolute pressure output range	Digital error response	[2]	—	0	—	LSB
$PABS_{DNL}$	Absolute pressure nonlinearity	Absolute pressure DNL, 12-bit monotonic with no missing codes	[3]	—	—	+1	LSB
$PABS_{INL}$	Absolute pressure nonlinearity	Absolute pressure INL, 12-bit (least squares BFSL)	[3]	—	—	+20	LSB
$PABS_{Peak}$	Absolute pressure noise peak (12-bit)	Temperature = –40 °C and 130 °C, V_{CC} = 5.0 V. Maximum deviation from mean, 50 readings, f_{Samp} = 8 kHz, LPF = 800 Hz, 4-pole	[1]	–8	—	+8	LSB
$PABS_{RMS}$	Absolute pressure noise RMS (12-bit)	Temperature = –40 °C and 130 °C, V_{CC} = 5.0 V. Standard deviation of 50 readings, f_{Samp} = 8 kHz, LPF = 800 Hz, 4-pole	[5]	—	—	+2	LSB
P_{OFF_D12}	Absolute pressure offset	At minimum rated pressure, P_CAL_ZERO = 0h, Temperature = –40 °C and 130 °C, V_{CC} = 5.0 V, 12-bit	[5]	—	299	—	LSB
PSC_3PSC_{SPI3}	Digital power supply coupling	C_{VCC} = 0.1 µf, 12-bit data 1 kHz ≤ f_n ≤ 100 MHz, V_{CC} = 3.3 V ± 0.1 V	[3]	—	—	2	LSB
PSC_5PSC_{SPI5}	Digital power supply coupling	C_{VCC} = 0.1 µf, 12-bit data 1 kHz ≤ f_n ≤ 100 MHz, V_{CC} = 5.0 V ± 0.1 V	[3]	—	—	2	LSB

[1] Parameter verified by pass/fail testing at final test.
[2] Functionality verified by modeling, simulation and/or design verification.
[3] Parameter verified by parametric and functional validation.
[4] Parameter verified by characterization.
[5] Parameter tested at final test.
[6] See Section 13 for accuracy over temperature and life, including nonlinearity, full scale = P_{ABS} range.
[7] Parameter does not include lifetime drift. For complete pressure drift over temperature and life, review Section 13.

11 Dynamic characteristics

Table 102. Dynamic characteristics

V_{CC_min} ≤ (V_{CC} – V_{SS}) ≤ V_{CC_max}, T_L ≤ T_A ≤ T_H, ΔT ≤ 25 °C/min, unless otherwise specified.

Symbol	Parameter	Condition		Min	Typ	Max	Units
I^2C							
t_{SCL_100} t_{SCLK_400} t_{SCLK_1000}	Clock (SCL) period (30 % of V_{CC} to 30 % of V_{CC})	100 kHz mode 400 kHz mode 1000 kHz mode	[1] [1] [1]	— — —	9.50 2.37 1.00	— — —	µs µs µs

All information provided in this document is subject to legal disclaimers.

© NXP B.V. 2019. All rights reserved.

Symbol	Parameter	Condition		Min	Typ	Max	Units
t_{SCLH_100} t_{SCLH_400} t_{SCLH_1000}	Clock (SCL) high time (70 % of V_{CC} to 70 % of V_{CC})	100 kHz mode 400 kHz mode 1000 kHz mode (not compliant with UM10204, rev.6)	[1] [1] [1]	— — —	4.00 0.60 0.50	— — —	µs µs µs
t_{SCLL_100} t_{SCLL_400} t_{SCLL_1000}	Clock (SCL) low time (30 % of V_{CC} to 30 % of V_{CC})	100 kHz mode 400 kHz mode 1000 kHz mode	[1] [1] [1]	— — —	4.70 1.30 0.50	— — —	µs µs µs
t_{SRISE_100} t_{SRISE_400} t_{SRISE_1000}	Clock (SCL) and data (SDA) rise time (30 % of V_{CC} to 70 % of V_{CC})	100 kHz mode 400 kHz mode 1000 kHz mode	[1] [1] [1]	— — —	— — —	1000 300 120	ns ns ns
t_{SFALL_100} t_{SFALL_400} t_{SFALL_1000}	Clock (SCL) and data (SDA) fall time (70 % of V_{CC} to 30 % of V_{CC})	100 kHz mode 400 kHz mode 1000 kHz mode	[1] [1] [1]	— — —	— — —	300 300 120	ns ns ns
t_{SETUP_100} t_{SETUP_400} t_{SETUP_1000}	Data input setup time (SDA = 30/70 % of V_{CC} to SCL = 30 % of V_{CC})	100 kHz mode 400 kHz mode 1000 kHz mode	[1] [1] [1]	— — —	250 100 50	— — —	ns ns ns
t_{HOLD_100} t_{HOLD_400} t_{HOLD_1000}	Data input hold time (SCL = 70 % of V_{CC} to SDA = 30/70 % of V_{CC})	100 kHz mode 400 kHz mode 1000 kHz mode	[1] [1] [1]	— — —	0 0 0	900 900 300	ns ns ns
$t_{STARTSETUP_100}$ $t_{STARTSETUP_400}$ $t_{STARTSETUP_1000}$	Start condition setup time (SDA = 30/70 % of V_{CC} to SCL = 30 % of V_{CC})	100 kHz mode 400 kHz mode 1000 kHz mode	[1] [1] [1]	— — —	4.70 0.60 0.26	— — —	µs µs µs
$t_{STARTHOLD_100}$ $t_{STARTHOLD_400}$ $t_{STARTHOLD_1000}$	Start condition hold time (SCL = 70 % of V_{CC} to SDA = 30/70 % of V_{CC})	100 kHz mode 400 kHz mode 1000 kHz mode	[1] [1] [1]	— — —	4.00 0.60 0.26	— — —	µs µs µs
$t_{STOPSETUP_100}$ $t_{STOPSETUP_400}$ $t_{STOPSETUP_1000}$	Stop condition setup time (SDA = 30/70 % of V_{CC} to SCL = 30 % of V_{CC})	100 kHz mode 400 kHz mode 1000 kHz mode	[1] [1] [1]	— — —	4.00 0.60 0.26	— — —	µs µs µs
t_{VALID_100} t_{VALID_400} t_{VALID_1000}	SCLK low to data valid (SCL = 30 % of V_{CC} to SDA = 30/70 % of V_{CC})	100 kHz mode 400 kHz mode 1000 kHz mode	[1] [1] [1]	— — —	— — —	3.45 0.90 0.45	µs µs µs
t_{FREE_100} t_{FREE_400} t_{FREE_1000}	Bus free time (SDA = 70 % of V_{CC} to SDA = 70 % of V_{CC})	100 kHz mode 400 kHz mode 1000 kHz mode	[1] [1] [1]	— — —	4.00 1.30 0.50	— — —	µs µs µs
C_{BUS}	Bus capacitive load		[2]	—	—	400	pF
SPI							
t_{SCLK}	Serial interface timing[3]	Clock (SCLK) period (10 % of V_{CC} to 10 % of V_{CC})	[1]	—	90	—	ns
t_{SCLKH}	Serial interface timing[3]	Clock (SCLK) period (90 % of V_{CC} to 90 % of V_{CC})	[1]	—	30	—	ns
t_{SCLKL}		Clock (SCLK) period (10 % of V_{CC} to 10 % of V_{CC})	[1]	—	30	—	ns
t_{SCLKR}	Serial interface timing[3]	Clock (SCLK) period (10 % of V_{CC} to 90 % of V_{CC})	[1]	—	10	25	ns
t_{SCLKF}		Clock (SCLK) period (90 % of V_{CC} to 10 % of V_{CC})	[1]	—	10	25	ns
t_{LEAD}	Serial interface timing[3]	SS_B asserted to SCLK high (SS_B = 10 % of V_{CC} to SCLK = 10 % of V_{CC})	[1]	—	50	—	ns
t_{ACCESS}	Serial interface timing[3]	SS_B asserted to SCLK high (SS_B = 10 % of V_{CC} to MISO = 10/90 % of V_{CC})	[1]	—	—	50	ns
t_{SETUP}	Serial interface timing[3]	SS_B asserted to SCLK high (MOSI = 10/90 % of V_{CC} to SCLK = 10 % of V_{CC})	[1]	—	20	—	ns

All information provided in this document is subject to legal disclaimers.

© NXP B.V. 2019. All rights reserved.

Symbol	Parameter	Condition		Min	Typ	Max	Units
t_{HOLD_IN}	Serial interface timing[3]	MOSI data hold time (SCLK = 90 % of V_{CC} to MOSI = 10/90 % of V_{CC})	[1]	—	10	—	ns
t_{HOLD_OUT}		MOSI data hold time (SCLK = 90 % of V_{CC} to MISO = 10/90 % of V_{CC})	[1]	0	—	—	ns
t_{VALID}	Serial interface timing[3]	SCLK low to data valid (SCLK = 10 % of V_{CC} to MISO = 10/90 % of V_{CC})	[1]	—	—	30	ns
t_{LAG}	Serial interface timing[3]	SCLK low to SS_B high (SCLK = 10 % of V_{CC} to SS_B = 90 % of V_{CC})	[1]	—	60	—	ns
$t_{DISABLE}$	Serial interface timing[3]	SS_B high to MISO disable (SS_B = 90 % of V_{CC} to MISO = Hi Z)	[1]	—	—	60	ns
t_{SSN}	Serial interface timing[3]	SS_B high to SS_B low (SS_B = 90 % of V_{CC} to SS_B = 90 % of V_{CC})	[1]	—	500	—	ns
t_{SLKSS}	Serial interface timing[3]	SCLK low to SS_B low (SCLK = 10 % of V_{CC} to SS_B = 90 % of V_{CC})	[1]	—	50	—	ns
t_{SSCLK}	Serial interface timing[3]	SS_B high to SCLK high (SS_B = 90 % of V_{CC} to SCLK = 90 % of V_{CC})	[1]	—	50	—	ns
t_{LAT_SPI}	Data latency			—	—	1	ns
Signal chain							
$t_{SigChain}$	P_{ABS} low-pass filter	Signal chain sample time	[4]	—	48	—	μs
f_{c0}		Cutoff frequency, filter option #0, 4-pole	[2] [4]	—	800	—	Hz
f_{c1}		Cutoff frequency, filter option #1, 4-pole	[2] [4]	—	1000	—	Hz
$t_{SigDelay}$	Signal delay (sinc filter to output delay, excluding the P_{ABS} LPF)		[4]	—	—	128	μs
$f_{Package}$	Package resonance frequency		[4]	27.1	—	—	kHz
Supply and support circuitry							
t_{VCC_POR}	Reset recovery (all modes, excluding V_{CC} voltage ramp time)	V_{CC} = V_{CCMIN} to POR release	[2]	—	—	1	ms
t_{POR_I2C/POR_SPI}		POR to first SPI command	[4]	0.400	—	0.700	ms
$t_{POR_DataValid}$		POR to sensor data valid	[4]	—	—	6	ms
$t_{RANGE_DataValid}$		DSP setting change to sensor data valid	[2]	—	—	6	ms
$t_{SOFT_RESET_I2C}$	Soft reset activation time, command complete to reset (no ACK follows)		[4]	—	—	700	ns
$t_{SOFT_RESET_SPI}$	Soft reset activation time, SS_B high to reset		[4]	—	—	700	ns
t_{CC_POR}	V_{CC} undervoltage detection delay		[4]	—	—	5	μs
t_{UVOV_RCV}	Undervoltage/overvoltage recovery delay		[4]	—	100	—	μs

[1] Parameter verified by characterization.
[2] Parameter verified by functional evaluation.
[3] See Section 7.5.6, $C_{MISO} \leq 80$ pF, $R_{MISO} \geq 10$ kΩ
[4] Functionality verified by modeling, simulation and/or design verification.

All information provided in this document is subject to legal disclaimers.

© NXP B.V. 2019. All rights reserved.

12 Media compatibility—pressure sensors only

For more information regarding media compatibility information, contact your local sales representative.

13 Pressure sensor accuracy (drift over temperature and life)

The absolute pressure accuracy is specified in Figure 23 and Figure 24.

Figure 23 shows the absolute pressure drift over the entire specified temperature range. The absolute pressure drift over temperature is guaranteed by production testing.

Figure 24 shows a multiplying factor that accounts for the life time drift of the pressure sensor. The results in Figure 24 have been obtained by qualification testing to conform to the AEC-Q100[2] (Rev-H) standards.

As an example, at room temperature, the worst case drift that the pressure sensor might have after accounting for lifetime performance is (1 kPa × multiplying factor) = 2 kPa.

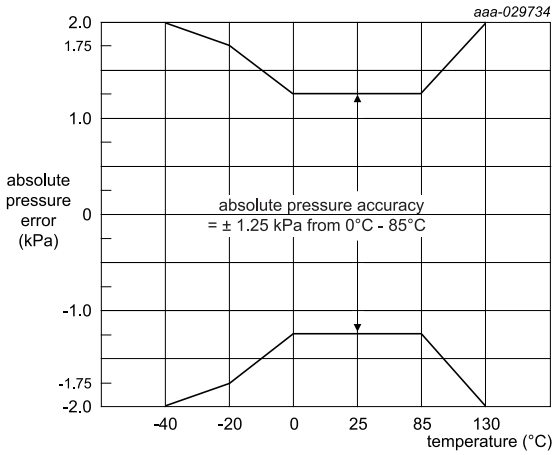

Figure 23. Absolute pressure accuracy as a function of temperature

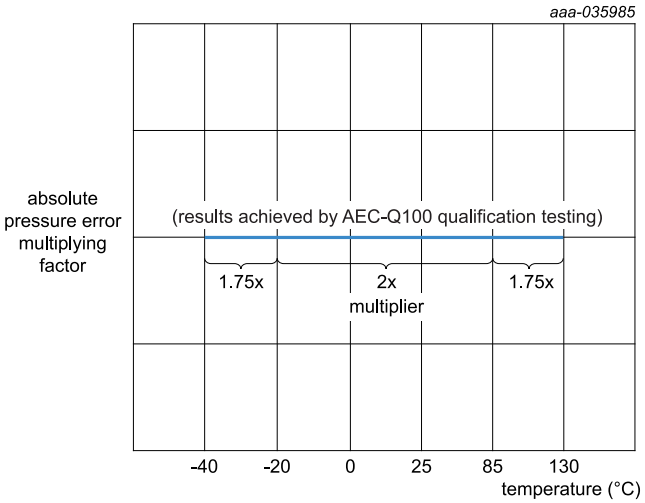

Figure 24. Absolute pressure accuracy multiplier over life

All information provided in this document is subject to legal disclaimers.

© NXP B.V. 2019. All rights reserved.

14 Application information

The FXPS7115D4 sensor can operate in two modes: I^2C and SPI. The application diagrams in Figure 25 and Figure 26 show the modes and their respective biasing and bypass components.

The sensor can be configured to operate in SPI mode to read the user registers, self-test and diagnostics information. The application diagram in Figure 26 shows the SPI and the respective biasing and bypass components.

Note: *A gel is used to provide media protection against corrosive elements which may otherwise damage metal bond wires and/or IC surfaces. Highly pressurized gas molecules may permeate through the gel and then occupy boundaries between material surfaces within the sensor package. When decompression occurs, the gas molecules may collect, form bubbles and possibly result in delamination of the gel from the material it protects. If a bubble is located on the pressure transducer surface or on the bond wires, the sensor measurement may shift from its calibrated transfer function. In some cases, these temporary shifts could be outside the tolerances listed in the data sheet. In rare cases, the bubble may bend the bond wires and result in a permanent shift.*

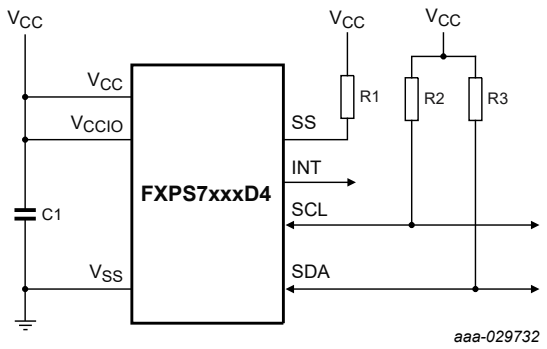

Figure 25. I^2C application diagram of FXPS7115D4

Table 103. External component recommendations for I^2C

Name	Type	Description	Purpose
C1	Ceramic	0.1 µF, 10 %, 10 V minimum, X7R	V_{CC} power supply decoupling
R1	General purpose	1000 Ω, 5 %, 200 PPM	I^2C selection pin pull-up resistor
R2	General purpose	1000 Ω, 5 %, 200 PPM	Serial clock pull-up resistor
R3	General purpose	1000 Ω, 5 %, 200 PPM	Serial data pull-up resistor

All information provided in this document is subject to legal disclaimers.

© NXP B.V. 2019. All rights reserved.

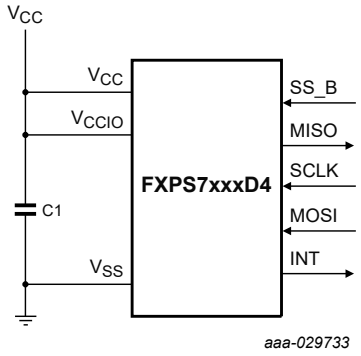

Figure 26. SPI application diagram for FXPS7115D4

Table 104. External component recommendations for SPI

Name	Type	Description	Purpose
C1	Ceramic	0.1 µF, 10 %, 10 V minimum, X7R	V_{CC} power supply decoupling

All information provided in this document is subject to legal disclaimers.

© NXP B.V. 2019. All rights reserved.

15 Package outline

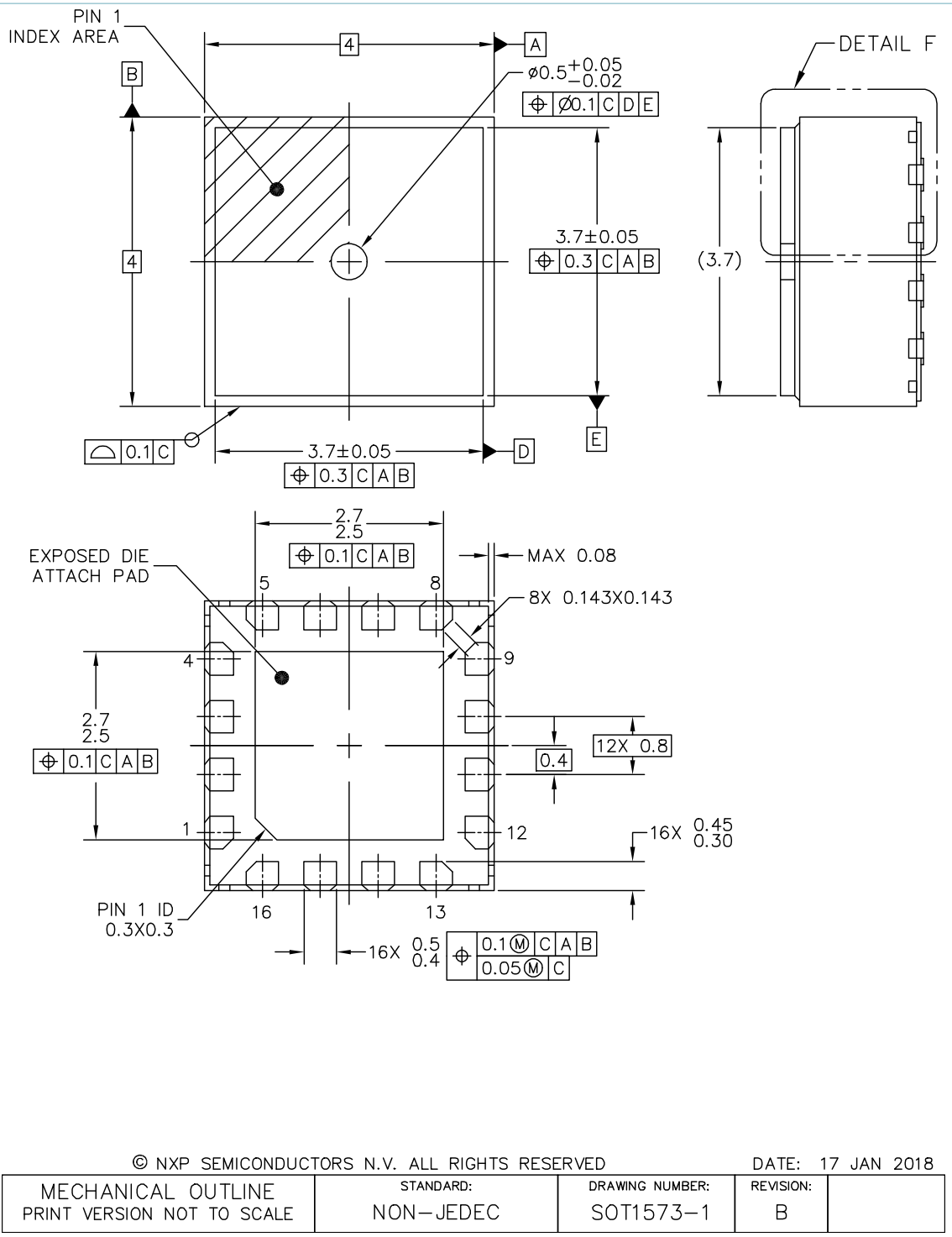

Figure 27. Package outline HQFN (SOT1573-1)

All information provided in this document is subject to legal disclaimers.

© NXP B.V. 2019. All rights reserved.

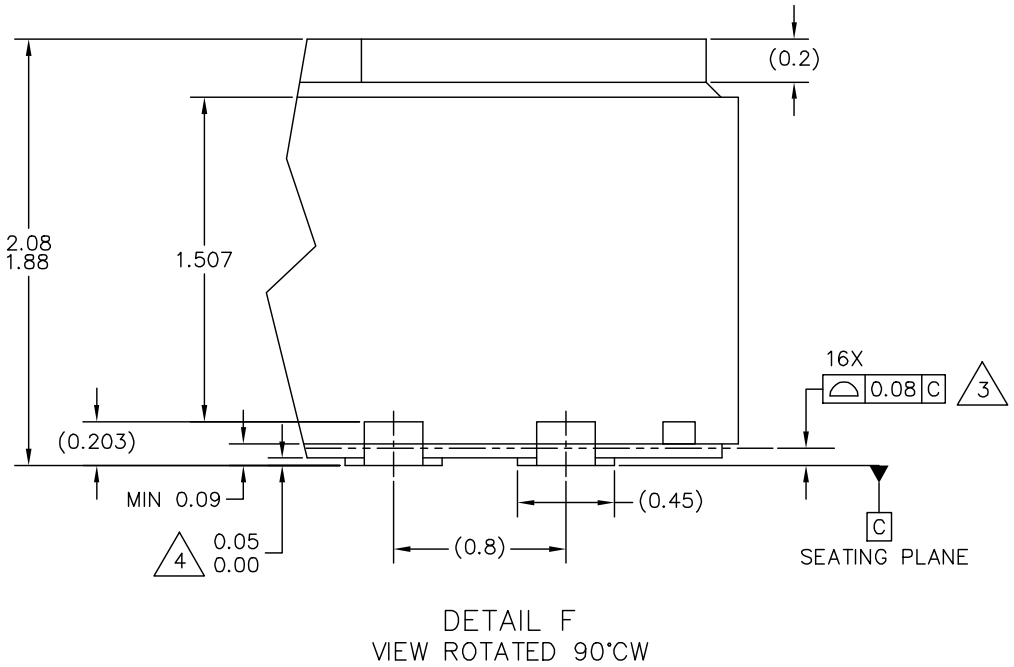

© NXP SEMICONDUCTORS N.V. ALL RIGHTS RESERVED DATE: 17 JAN 2018

MECHANICAL OUTLINE PRINT VERSION NOT TO SCALE	STANDARD: NON–JEDEC	DRAWING NUMBER: SOT1573–1	REVISION: B	

Figure 28. Package outline detail HQFN (SOT1573-1)

All information provided in this document is subject to legal disclaimers.

© NXP B.V. 2019. All rights reserved.

NOTES:

1. ALL DIMENSIONS ARE IN MILLIMETERS.
2. DIMENSIONING AND TOLERANCING PER ASME Y14.5M–1994.
3. COPLANARITY APPLIES TO LEADS AND DIE ATTACH PAD.
4. DIMENSION APPLIES ONLY FOR TERMINALS.
5. MIN METAL GAP SHOULD BE 0.2 MM.

© NXP SEMICONDUCTORS N.V. ALL RIGHTS RESERVED DATE: 17 JAN 2018

MECHANICAL OUTLINE PRINT VERSION NOT TO SCALE	STANDARD: NON–JEDEC	DRAWING NUMBER: SOT1573–1	REVISION: B	

Figure 29. Package outline note HQFN (SOT1573-1)

16 References

[1] **Assembly guidelines for quad flat no-lead (HQFN) and small outline no-lead (SON) packages** — NXP Application Note (AN) 1902, Rev. 8.0 - 6 February 2018, 51 pages, https://www.nxp.com/docs/en/application-note/AN1902.pdf

[2] **AEC documents on Automotive Electronics Council Component Technical Committee's site:** http://www.aecouncil.com/AECDocuments.html

[3] **I^2C-Bus specification and user manual** — NXP User Manual (UM) 10204, Rev. 6 - 4 April 2014, 64 pages, https://www.nxp.com/docs/en/user-guide/UM10204.pdf

All information provided in this document is subject to legal disclaimers.

© NXP B.V. 2019. All rights reserved.

17 Revision history

Table 105. Revision history

Document ID	Release date	Data sheet status	Change notice	Supercedes
FXPS7115D4 v.3	20191205	Product data sheet	-	FXPS7115D4 v.2
Modifications	• Section 10: updated absolute pressure accuracy specification • Section 13: updated Figure 23 and Figure 24			
FXPS7115D4 v.2	20190730	Product data sheet	-	FXPS7115D4 v.1
FXPS7115D4 v.1	20180816	Product data sheet	-	-

All information provided in this document is subject to legal disclaimers.

© NXP B.V. 2019. All rights reserved.

18 Legal information

18.1 Data sheet status

Document status[1][2]	Product status[3]	Definition
Objective [short] data sheet	Development	This document contains data from the objective specification for product development.
Preliminary [short] data sheet	Qualification	This document contains data from the preliminary specification.
Product [short] data sheet	Production	This document contains the product specification.

[1] Please consult the most recently issued document before initiating or completing a design.
[2] The term 'short data sheet' is explained in section "Definitions".
[3] The product status of device(s) described in this document may have changed since this document was published and may differ in case of multiple devices. The latest product status information is available on the Internet at URL http://www.nxp.com.

18.2 Definitions

Draft — The document is a draft version only. The content is still under internal review and subject to formal approval, which may result in modifications or additions. NXP Semiconductors does not give any representations or warranties as to the accuracy or completeness of information included herein and shall have no liability for the consequences of use of such information.

Short data sheet — A short data sheet is an extract from a full data sheet with the same product type number(s) and title. A short data sheet is intended for quick reference only and should not be relied upon to contain detailed and full information. For detailed and full information see the relevant full data sheet, which is available on request via the local NXP Semiconductors sales office. In case of any inconsistency or conflict with the short data sheet, the full data sheet shall prevail.

Product specification — The information and data provided in a Product data sheet shall define the specification of the product as agreed between NXP Semiconductors and its customer, unless NXP Semiconductors and customer have explicitly agreed otherwise in writing. In no event however, shall an agreement be valid in which the NXP Semiconductors product is deemed to offer functions and qualities beyond those described in the Product data sheet.

18.3 Disclaimers

Limited warranty and liability — Information in this document is believed to be accurate and reliable. However, NXP Semiconductors does not give any representations or warranties, expressed or implied, as to the accuracy or completeness of such information and shall have no liability for the consequences of use of such information. NXP Semiconductors takes no responsibility for the content in this document if provided by an information source outside of NXP Semiconductors. In no event shall NXP Semiconductors be liable for any indirect, incidental, punitive, special or consequential damages (including - without limitation - lost profits, lost savings, business interruption, costs related to the removal or replacement of any products or rework charges) whether or not such damages are based on tort (including negligence), warranty, breach of contract or any other legal theory. Notwithstanding any damages that customer might incur for any reason whatsoever, NXP Semiconductors' aggregate and cumulative liability towards customer for the products described herein shall be limited in accordance with the Terms and conditions of commercial sale of NXP Semiconductors.

Right to make changes — NXP Semiconductors reserves the right to make changes to information published in this document, including without limitation specifications and product descriptions, at any time and without notice. This document supersedes and replaces all information supplied prior to the publication hereof.

Applications — Applications that are described herein for any of these products are for illustrative purposes only. NXP Semiconductors makes no representation or warranty that such applications will be suitable for the specified use without further testing or modification. Customers are responsible for the design and operation of their applications and products using NXP Semiconductors products, and NXP Semiconductors accepts no liability for any assistance with applications or customer product design. It is customer's sole responsibility to determine whether the NXP Semiconductors product is suitable and fit for the customer's applications and products planned, as well as for the planned application and use of customer's third party customer(s). Customers should provide appropriate design and operating safeguards to minimize the risks associated with their applications and products. NXP Semiconductors does not accept any liability related to any default, damage, costs or problem which is based on any weakness or default in the customer's applications or products, or the application or use by customer's third party customer(s). Customer is responsible for doing all necessary testing for the customer's applications and products using NXP Semiconductors products in order to avoid a default of the applications and the products or of the application or use by customer's third party customer(s). NXP does not accept any liability in this respect.

Limiting values — Stress above one or more limiting values (as defined in the Absolute Maximum Ratings System of IEC 60134) will cause permanent damage to the device. Limiting values are stress ratings only and (proper) operation of the device at these or any other conditions above those given in the Recommended operating conditions section (if present) or the Characteristics sections of this document is not warranted. Constant or repeated exposure to limiting values will permanently and irreversibly affect the quality and reliability of the device.

Terms and conditions of commercial sale — NXP Semiconductors products are sold subject to the general terms and conditions of commercial sale, as published at http://www.nxp.com/profile/terms, unless otherwise agreed in a valid written individual agreement. In case an individual agreement is concluded only the terms and conditions of the respective agreement shall apply. NXP Semiconductors hereby expressly objects to applying the customer's general terms and conditions with regard to the purchase of NXP Semiconductors products by customer.

No offer to sell or license — Nothing in this document may be interpreted or construed as an offer to sell products that is open for acceptance or the grant, conveyance or implication of any license under any copyrights, patents or other industrial or intellectual property rights.

Suitability for use in automotive applications — This NXP Semiconductors product has been qualified for use in automotive applications. Unless otherwise agreed in writing, the product is not designed, authorized or warranted to be suitable for use in life support, life-critical or safety-critical systems or equipment, nor in applications where failure or malfunction of an NXP Semiconductors product can reasonably be expected

All information provided in this document is subject to legal disclaimers.

© NXP B.V. 2019. All rights reserved.

to result in personal injury, death or severe property or environmental damage. NXP Semiconductors and its suppliers accept no liability for inclusion and/or use of NXP Semiconductors products in such equipment or applications and therefore such inclusion and/or use is at the customer's own risk.

Export control — This document as well as the item(s) described herein may be subject to export control regulations. Export might require a prior authorization from competent authorities.

Translations — A non-English (translated) version of a document is for reference only. The English version shall prevail in case of any discrepancy between the translated and English versions.

Security — While NXP Semiconductors has implemented advanced security features, all products may be subject to unidentified vulnerabilities. Customers are responsible for the design and operation of their applications and products to reduce the effect of these vulnerabilities on customer's applications and products, and NXP Semiconductors accepts no liability for any vulnerability that is discovered. Customers should implement appropriate design and operating safeguards to minimize the risks associated with their applications and products.

18.4 Trademarks

Notice: All referenced brands, product names, service names and trademarks are the property of their respective owners.

NXP — is a trademark of NXP B.V.

All information provided in this document is subject to legal disclaimers.

© NXP B.V. 2019. All rights reserved.

Tables

Tab. 1. Ordering information 2
Tab. 2. Ordering options 2
Tab. 3. Pin description 4
Tab. 4. Self-test control register 8
Tab. 5. Self-test control bits for sense data fixed value verification 8
Tab. 6. IIR low pass filter coefficients 10
Tab. 7. Temperature conversion variables 13
Tab. 8. Sensor data register read wrap-around description 17
Tab. 9. SPI command format 19
Tab. 10. SPI command bit allocation 20
Tab. 11. SPI response format 20
Tab. 12. Register read command message format 21
Tab. 13. Register read command message bit field descriptions 21
Tab. 14. Register read response message format 21
Tab. 15. Register read response message bit field descriptions 22
Tab. 16. Register write command message format 22
Tab. 17. Register write command message bit field descriptions 22
Tab. 18. Register write response message format 23
Tab. 19. Register write response message bit field descriptions 23
Tab. 20. Sensor data request command message format 23
Tab. 21. Sensor data request command message bit field descriptions 23
Tab. 22. Sensor data request response message format 24
Tab. 23. Sensor data request response message bit field descriptions 24
Tab. 24. Reserved command message format 24
Tab. 25. Reserved command message bit field descriptions 24
Tab. 26. Reserved command response message format 24
Tab. 27. Reserved command response message bit field descriptions 25
Tab. 28. SPI Command Message CRC 25
Tab. 29. SPI Response Message CRC 26
Tab. 30. Basic status field for responses to register commands 26
Tab. 31. Error responses bit field descriptions 26
Tab. 32. User-accessible data — sensor specific information 28
Tab. 33. COUNT - rolling counter register (address 00h) bit allocation 31
Tab. 34. DEVSTAT - device status register (address 01h) bit allocation 32
Tab. 35. DEVSTAT - device status register (address 01h) bit description 32
Tab. 36. DEVSTAT1 - device status register (address 02h) bit allocation 32
Tab. 37. DEVSTAT1 - device status register (address 02h) bit description 33
Tab. 38. DEVSTAT2 - device status register (address 03h) bit allocation 33
Tab. 39. DEVSTAT2 - device status register (address 03h) bit description 34
Tab. 40. DEVSTAT3 - device status register (address 04h) bit allocation 34
Tab. 41. DEVSTAT3 - device status register (address 04h) bit description 35
Tab. 42. TEMPERATURE - temperature register (address 0Eh) bit allocation 35
Tab. 43. DEVLOCK_WR - lock register writes register (address 10h) bit allocation 35
Tab. 44. DEVLOCK_WR - lock register writes register (address 10h) bit description 36
Tab. 45. Device reset command sequence 36
Tab. 46. UF_REGION_W - UF region selection register (address 14h) bit allocation 36
Tab. 47. UF_REGION_R - UF region selection register (address 15h) bit allocation 37
Tab. 48. REGION_LOAD Bit Definitions 37
Tab. 49. REGION_ACTIVE Bit Definitions 37
Tab. 50. COMMTYPE - communication type register (address 16h) bit allocation 38
Tab. 51. COMMTYPE - communication type register (address 16h) bit description 38
Tab. 52. SOURCEID_0 - source identification register (address 1Ah) bit allocation 39
Tab. 53. SOURCEID_1 - source identification register (address 1Bh) bit allocation 39
Tab. 54. TIMING_CFG - communication timing register (address 22h) bit allocation 39
Tab. 55. SPI_CFG Register (address 3Dh) bit allocation 39
Tab. 56. DATASIZE Bit Definition 39
Tab. 57. SPI CRC Definition 40
Tab. 58. WHO_AM_I - device identification register (address 3Eh) bit allocation 40
Tab. 59. WHO_AM_I register values 40
Tab. 60. I2C_ADDRESS - I2C slave address register (address 3Fh) bit allocation 41
Tab. 61. Self-Test Control Bits (ST_CTRL[3:0]) 41
Tab. 62. DSP_CFG_U1 - DSP user configuration #1 register (address 40h) bit allocation 42
Tab. 63. Low-pass filter selection bits (LPF[3:0]) 42
Tab. 64. User range selection bits (USER_RANGE[1:0]) 42
Tab. 65. DSP_CFG_U4 - DSP user configuration #4 register (address 43h) bit allocation 42
Tab. 66. DSP_CFG_U4 - DSP user configuration #4 register (address 43h) bit description 43
Tab. 67. DSP_CFG_U5 - DSP user configuration #5 register (address 44h) bit allocation 43
Tab. 68. DSP_CFG_U5 - DSP user configuration #5 register (address 44h) bit description 43

All information provided in this document is subject to legal disclaimers.

© NXP B.V. 2019. All rights reserved.

Tab. 69. Self-test control bits 43
Tab. 70. INT_CFG - interrupt configuration register (address 45h) bit allocation 44
Tab. 71. INT_CFG - interrupt configuration register (address 45h) bit description 44
Tab. 72. P_INT_HI, P_INT_LO - interrupt window comparator threshold registers (address 46h to 49h) bit allocation 44
Tab. 73. P_CAL_ZERO - pressure calibration registers (address 4Ch, 4Dh) bit allocation 45
Tab. 74. DSP_STAT - DSP-specific status register (address 60h) bit allocation 46
Tab. 75. DSP_STAT - DSP-specific status register (address 60h) bit description 46
Tab. 76. DEVSTAT_COPY - device status copy register (address 61h) bit allocation 46
Tab. 77. SNSDATA0_L, SNSDATA0_H - sensor data #0 registers (addresses 62h, 63h) bit allocation 47
Tab. 78. SNSDATA1_L, SNSDATA1_H - sensor data #1 registers (address 64h, 65h) bit allocation ...47
Tab. 79. SNSDATA0_TIMEx - time stamp register (address 66h to 6Bh) bit allocation 48
Tab. 80. P_Max and P_Min registers (address 6Ch to 6Fh) bit allocation 48
Tab. 81. FRT - free running timer registers (addresses 78h to 7Dh) bit allocation 48
Tab. 82. Range Indication Bits (RANGE[3:0]) 49
Tab. 83. IC TYPE REGISTER (ICTYPEID address C0h) bit allocation 49
Tab. 84. IC MANUFACTURER REVISION REGISTER (ICREVID address C1h) bit allocation 49
Tab. 85. IC MANUFACTURER IDENTIFICATION REGISTER (ICMFGID address C2h) bit allocation 50
Tab. 86. PN0 Register (address C4h) bit allocation 50
Tab. 87. PN1 Register (address C5h) bit allocation 50
Tab. 88. SN0 Register (address C6h) bit allocation 50
Tab. 89. SN1 Register (address C7h) bit allocation 51
Tab. 90. SN2 Register (address C8h) bit allocation 51
Tab. 91. SN3 Register (address C9h) bit allocation 51
Tab. 92. SN4 Register (address CAh) bit allocation 51
Tab. 93. ASICWFR# Register (address CBh) bit allocation 51
Tab. 94. ASICWFR_X Register (address CCh) bit allocation 51
Tab. 95. ASICWFR_Y Register (address CDh) bit allocation 52
Tab. 96. ASICWLOT_L Register (address D0h) bit allocation 52
Tab. 97. ASICWLOT_H Register (address D1h) bit allocation 52
Tab. 98. Lock and CRC Register bit definitions 53
Tab. 99. Maximum ratings 54
Tab. 100. Electrical characteristics — supply and I/O 55
Tab. 101. Static characteristics 55
Tab. 102. Dynamic characteristics 56
Tab. 103. External component recommendations for I2C 60
Tab. 104. External component recommendations for SPI 61
Tab. 105. Revision history 66

Figures

Fig. 1. Block diagram of FXPS7115D4 3
Fig. 2. Pin configuration for 16-pin HQFN 3
Fig. 3. Voltage regulation and monitoring 5
Fig. 4. User-controlled PABS common mode self-test flowchart 7
Fig. 5. ΣΔ converter block diagram 8
Fig. 6. Signal chain diagram 9
Fig. 7. Sinc filter response 9
Fig. 8. 800 Hz, 4-pole, low-pass filter response 10
Fig. 9. 800 Hz, 4-pole output signal delay 11
Fig. 10. 1000 Hz, 4-pole, low-pass filter response 11
Fig. 11. 1000 Hz, 4-pole output signal delay 12
Fig. 12. Temperature sensor signal chain block diagram 13
Fig. 13. Common mode error detection signal chain block diagram 13
Fig. 14. I2C bit transmissions 14
Fig. 15. I2C start condition 14
Fig. 16. I2C byte transmissions 15
Fig. 17. I2C acknowledge and not acknowledge transmission 15
Fig. 18. I2C stop condition 16
Fig. 19. I2C timing diagram 18
Fig. 20. Standard 32 Bit SPI protocol timing diagram ... 19
Fig. 21. SPI data output verification 27
Fig. 22. SPI timing diagram 27
Fig. 23. Absolute pressure accuracy as a function of temperature 59
Fig. 24. Absolute pressure accuracy multiplier over life 59
Fig. 25. I2C application diagram of FXPS7115D4 60
Fig. 26. SPI application diagram for FXPS7115D4 61
Fig. 27. Package outline HQFN (SOT1573-1) 62
Fig. 28. Package outline detail HQFN (SOT1573-1) 63
Fig. 29. Package outline note HQFN (SOT1573-1) 64

All information provided in this document is subject to legal disclaimers.

© NXP B.V. 2019. All rights reserved.

Contents

1 General description ... 1
2 Features and benefits ... 1
3 Applications ... 2
3.1 Automotive ... 2
3.2 Industrial ... 2
3.3 Medical/Consumer ... 2
4 Ordering information ... 2
4.1 Ordering options ... 2
5 Block diagram ... 3
6 Pinning information ... 3
6.1 Pinning ... 3
6.2 Pin description ... 4
7 Functional description ... 4
7.1 Voltage regulators ... 4
7.1.1 VCC, VREG, VREGA, undervoltage monitor ... 5
7.2 Internal oscillator ... 5
7.3 Pressure sensor signal path ... 5
7.3.1 Transducer ... 5
7.3.2 Self-test functions ... 6
7.3.2.1 PABS common mode verification ... 6
7.3.2.2 Startup digital self-test verification ... 7
7.3.2.3 Startup sense data fixed value verification ... 8
7.3.3 ΣΔ converter ... 8
7.3.4 Digital signal processor (DSP) ... 9
7.3.4.1 Decimation sinc filter ... 9
7.3.4.2 Signal trim and compensation ... 9
7.3.4.3 Low-pass filter ... 9
7.3.4.4 Absolute pressure output data scaling equation ... 12
7.3.5 Temperature sensor ... 12
7.3.5.1 Temperature sensor signal chain ... 12
7.3.5.2 Temperature sensor output scaling equation ... 13
7.3.6 Common mode error detection signal chain ... 13
7.4 Inter-integrated circuit (I2C) interface ... 13
7.4.1 I2C bit transmissions ... 14
7.4.2 I2C start condition ... 14
7.4.3 I2C byte transmission ... 14
7.4.4 I2C acknowledge and not acknowledge transmissions ... 15
7.4.5 I2C stop condition ... 15
7.4.6 I2C register transfers ... 16
7.4.6.1 Register write transfers ... 16
7.4.6.2 Register read transfers ... 17
7.4.6.3 Sensor data register read wrap around ... 17
7.4.7 I2C timing diagram ... 18
7.5 Standard 32-bit SPI protocol ... 18
7.5.1 SPI command format ... 19
7.5.2 SPI response format ... 20
7.5.3 Command summary ... 21
7.5.3.1 Register read command ... 21
7.5.3.2 Register write command ... 22
7.5.3.3 Sensor data request commands ... 23
7.5.3.4 Reserved commands ... 24
7.5.4 Error checking ... 25
7.5.4.1 Default 8-bit CRC ... 25
7.5.5 Exception handling ... 26
7.5.5.1 Basic status field ... 26
7.5.5.2 Error responses ... 26
7.5.5.3 SPI error ... 26
7.5.5.4 SPI data output verification error ... 27
7.5.6 SPI timing diagram ... 27
7.6 User-accessible data array ... 28
7.7 Register information ... 31
7.7.1 COUNT - rolling counter register (address 00h) ... 31
7.7.2 Device status registers ... 31
7.7.2.1 DEVSTAT - device status register (address 01h) ... 32
7.7.2.2 DEVSTAT1 - device status register (address 02h) ... 32
7.7.2.3 DEVSTAT2 - device status register (address 03h) ... 33
7.7.2.4 DEVSTAT3 - device status register (address 04h) ... 34
7.7.3 TEMPERATURE - temperature register (address 0Eh) ... 35
7.7.4 DEVLOCK_WR - lock register writes register (address 10h) ... 35
7.7.5 UF_REGION_W, UF_REGION_R - UF region selection registers (address 14h, 15h) ... 36
7.7.6 COMMTYPE - communication type register (address 16h) ... 38
7.7.7 SOURCEID_x - source identification registers (address 1Ah, 1Bh) ... 38
7.7.8 TIMING_CFG - communication timing register (address 22h) ... 39
7.7.9 SPI Configuration Control Register (SPI_CFG, Address 3Dh) ... 39
7.7.9.1 SPI Data Field Size (DATASIZE) ... 39
7.7.9.2 SPI CRC Length and Seed Bits ... 40
7.7.10 WHO_AM_I - who am I register (address 3Eh) ... 40
7.7.11 I2C_ADDRESS - I2C slave address register (address 3Fh) ... 40
7.7.12 DSP Configuration Registers (DSP_CFG_Ux) ... 41
7.7.12.1 Self-test control bits ... 41
7.7.12.2 DSP_CFG_U1 - DSP user configuration #1 register (address 40h) ... 42
7.7.12.3 DSP_CFG_U4 - DSP user configuration #4 register (address 43h) ... 42
7.7.12.4 DSP_CFG_U5 - DSP user configuration #5 register (address 44h) ... 43
7.7.13 INT_CFG - interrupt configuration register (address 45h) ... 44
7.7.14 P_INT_HI, P_INT_LO - interrupt window comparator threshold registers (address 46h to 49h) ... 44
7.7.15 P_CAL_ZERO - pressure calibration registers (address 4Ch, 4Dh) ... 45
7.7.16 DSP_STAT - DSP-specific status register (address 60h) ... 46

All information provided in this document is subject to legal disclaimers.

© NXP B.V. 2019. All rights reserved.

7.7.17 DEVSTAT_COPY - device status copy register (address 61h) 46
7.7.18 SNSDATA0_L, SNSDATA0_H - sensor data #0 registers (address 62h, 63h) 46
7.7.19 SNSDATA1_L, SNSDATA1_H - sensor data #1 registers (address 64h, 65h) 47
7.7.20 SNSDATA0_TIMEx - time stamp registers (address 66h to 6Bh) 47
7.7.21 P_MAX, P_MIN - maximum and minimum absolute pressure value registers (address 6Ch to 6Fh) 48
7.7.22 FRT - free running timer registers (addresses 78h to 7Dh) 48
7.7.23 DSP_CFG_F Register 49
7.7.24 IC type register (Address C0h) 49
7.7.25 IC manufacturer revision register (Address C1h) 49
7.7.26 IC manufacturer identification register (address C2h) 50
7.7.27 Part number register (address C4h, C5h) 50
7.7.28 Device serial number registers 50
7.7.29 ASIC wafer ID registers 51
7.7.30 USERDATA_0 to USERDATA_E - user data registers 52
7.7.31 USERDATA_10 to USERDATA_1E - user data registers 52
7.7.32 Lock and CRC Registers 52
7.7.33 Reserved registers 53
7.7.34 Invalid register addresses 53
7.8 Read/write register array CRC verification 53
8 Maximum ratings 54
9 Operating range 55
10 Static characteristics 55
11 Dynamic characteristics 56
12 Media compatibility—pressure sensors only 59
13 Pressure sensor accuracy (drift over temperature and life) 59
14 Application information 60
15 Package outline 62
16 References 65
17 Revision history 66
18 Legal information 67

Please be aware that important notices concerning this document and the product(s) described herein, have been included in section 'Legal information'.

© NXP B.V. 2019. **All rights reserved.**

For more information, please visit: http://www.nxp.com
For sales office addresses, please send an email to: salesaddresses@nxp.com

Date of release: 5 December 2019
Document identifier: FXPS7115D4