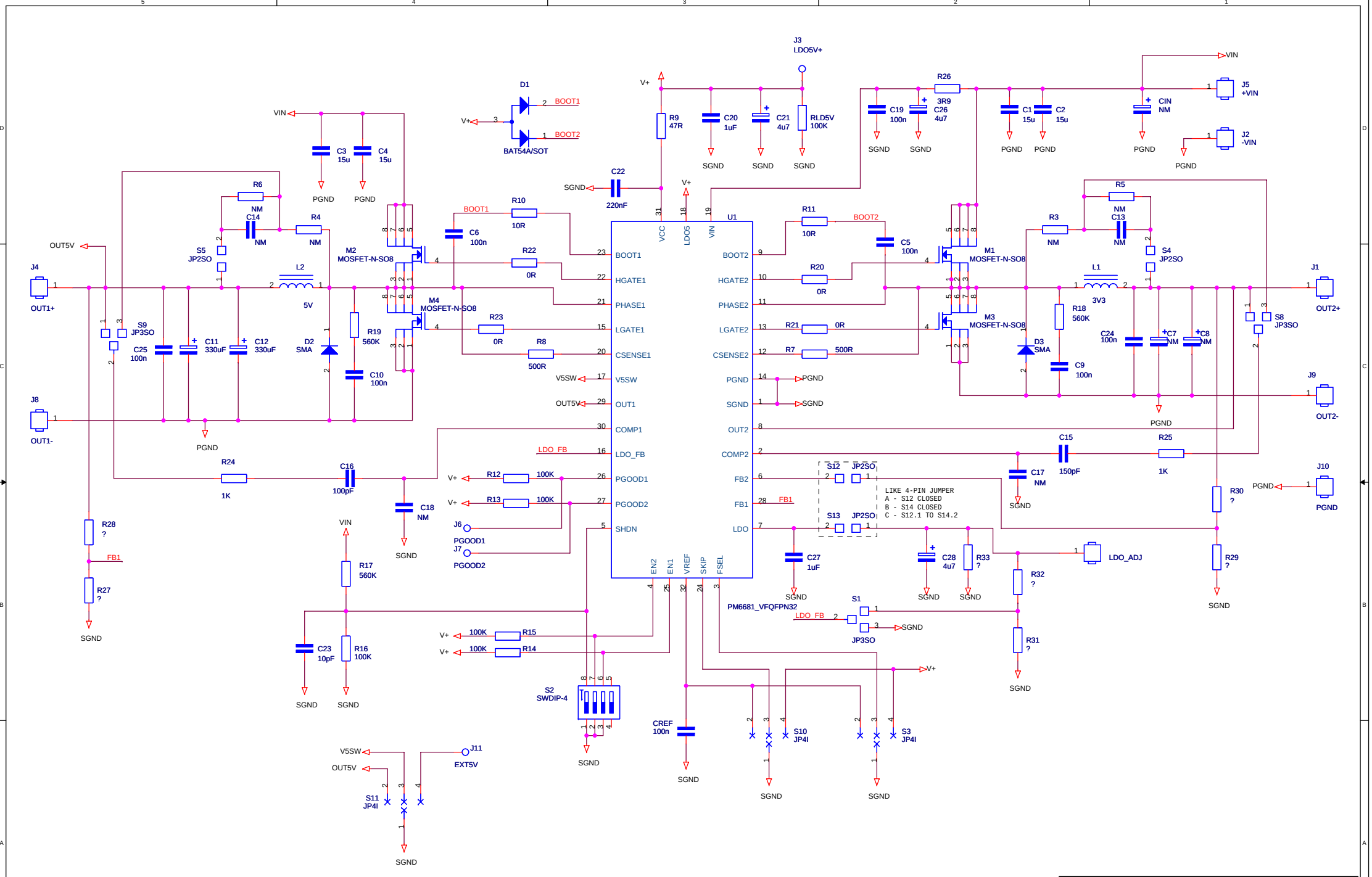

STMicroelectronics Confidential

Title: PM6680A Eval. kit

Size	Document Number	Rev
		2.0

Date: Wednesday, January 30, 2008 Sheet 1 of 4