TMP815 Variable-Speed Single-Phase Full-Wave Fan-Motor Predriver

1 Features

- Single-Phase Full-Wave Driving Predriver
  - Low Saturation Drive Using External P-channel Devices at Top and N-channel Devices in Bottom in H-bridge Configuration Enables High-Efficiency Low-Power Consumption Drive
- Variable Speed Control Possible With External PWM Input
  - Separately Excited Upper Direct PWM (f = 30 kHz) Control Method Ensures Quiet Speed Control
- Current Limiter Circuit Incorporated
  - Chopper Type Current Limiting Made at Start-up and During Lock
- Reactive Current Cut Circuit Incorporated
  - Reactive Current Before Phase Change Is Cut to Enable Silent and Low-Consumption Drive
- Minimum-Speed Setting Pin
  - Minimum Speed Can be Set With External Resistor
- Soft-Start Setting Pin
- Lock Protection and Automatic Reset Circuits Incorporated
- Rotation Speed Detection (FG) and Lock Detection (RD) Output
- Thermal Shutdown Circuit Incorporated

2 Applications

- Server Fans
- Appliance Fans

3 Description

The TMP815 device is a single-phase bipolar driving motor predriver with a variable-speed function that is compatible with an external PWM signal. A highly efficient and quiet variable-drive fan motor with low-power consumption can be achieved with few external parts.

This device is best suited for driving of the servers requiring large air flow and large current or the fan motors of consumer appliances.

Device Information (1)

PART NUMBER	PACKAGE	BODY SIZE (NOM)
TMP815	TSSOP (PW)	4.40 mm × 5.00 mm

(1) For all available packages, see the orderable addendum at the end of the data sheet.

Simplified Schematic

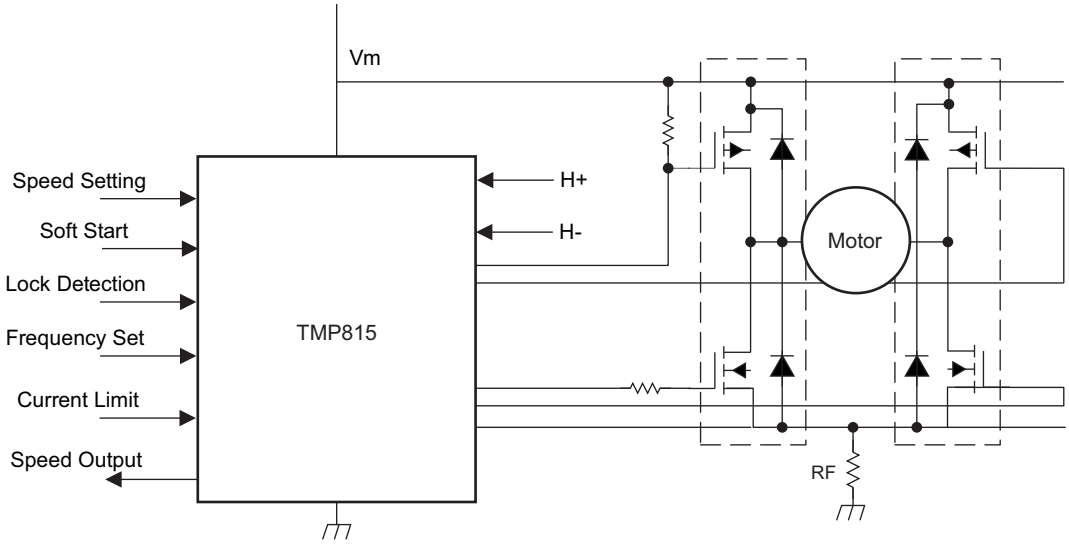

An IMPORTANT NOTICE at the end of this data sheet addresses availability, warranty, changes, use in safety-critical applications, intellectual property matters and other important disclaimers. PRODUCTION DATA.

Table of Contents

1 Features ... 1
2 Applications ... 1
3 Description ... 1
4 Revision History ... 2
5 Pin Configuration and Functions ... 3
6 Specifications ... 4
6.1 Absolute Maximum Ratings ... 4
6.2 ESD Ratings ... 4
6.3 Recommended Operating Conditions ... 4
6.4 Thermal Information ... 4
6.5 Electrical Characteristics ... 5
6.6 Typical Characteristics ... 5
7 Detailed Description ... 6
7.1 Overview ... 6
7.2 Functional Block Diagram ... 6
7.3 Feature Description ... 7
7.4 Device Functional Modes ... 9
8 Application and Implementation ... 10
8.1 Application Information ... 10
8.2 Typical Application ... 11
9 Power Supply Recommendations ... 14
10 Layout ... 14
10.1 Layout Guidelines ... 14
10.2 Layout Example ... 14
11 Device and Documentation Support ... 15
11.1 Community Resource ... 15
11.2 Trademarks ... 15
11.3 Electrostatic Discharge Caution ... 15
11.4 Glossary ... 15
12 Mechanical, Packaging, and Orderable Information ... 15

4 Revision History

NOTE: Page numbers for previous revisions may differ from page numbers in the current version.

Changes from Revision A (May 2015) to Revision B	Page
• Changed the *Operating free-air temperature* from (-30 to 95 °C) to (-40 to 125 °C) in the *Recommended Operating Conditions* table and added characterization data for the new temperature range in the *Electrical Characteristics* table	4

Changes from Original (May 2009) to Revision A	Page
• Added *ESD Ratings* table, *Feature Description* section, *Device Functional Modes*, *Application and Implementation* section, *Power Supply Recommendations* section, *Layout* section, *Device and Documentation Support* section, and *Mechanical, Packaging, and Orderable Information* section	1

Copyright © 2009–2015, Texas Instruments Incorporated

5 Pin Configuration and Functions

PW Package
16-Pin TSSOP
Top View

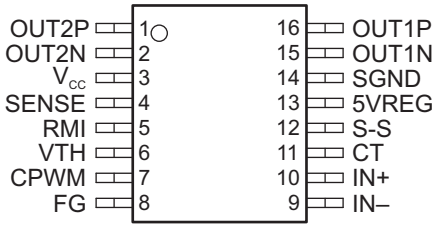

Pin Functions

PIN		I/O	DESCRIPTION
NAME	NO.		
OUT2P	1	O	Upper-side driver output
OUT2N	2	O	Lower-side driver output
V_{CC}	3		Power supply For the power stabilization capacitor on the signal side (see *2 in Figure 5), use the capacitance of 1 µF or more. Connect V_{CC} and GND with a thick and short pattern. For the power stabilization capacitor on the power side (see *3 in Figure 5), use the capacitance of 1 µF or more. Connect the power supply on the power side and GND with a thick and short pattern.
SENSE	4	I	Current limiting detection (see *8 in Figure 5) When the pin voltage exceeds 0.2 V, the current is limited, and the operation enters the lower regeneration mode. Connect to GND if not used.
RMI	5	I	Minimum speed setting (see *6 in Figure 5) If the device power supply is likely to be turned off first when the pin is used with external power supply, insert a current limiting resistor to prevent inflow of large current (also applies to VTH terminal). Connect to 5VREG with a pullup resistor if not used.
VTH	6	I	Speed control (see *7 in Figure 5) For control with pulse input, insert a current limiting resistor and use the pin with a frequency of 20 kHz to 100 kHz (TI recommends 20 kHz to 50 kHz). For the control method, see Figure 2. Connect to GND if not used (at full speed).
CPWM	7	O	Connection to capacitor for generation of PWM basic frequency (see *5 in Figure 5) CP = 220 pF causes oscillation at f = 30 kHz, which is the basic frequency of PWM. As this is also used for the current limiting canceling signal, be sure to connect the capacitor even when speed control is not used.
FG	8	O	Rotation speed detection pin (see *9 in Figure 5) This is an open-collector output, which can detect the rotation speed from the FG output according to the phase change over. Keep this pin open when not used.
IN–	9	I	Hall input (see *4 in Figure 5)
IN+	10	I	Hall input. Make connecting traces as short as possible to prevent carrying of noise. To further limit noise, insert a capacitor between IN+ and IN–. The Hall input circuit is a comparator having a hysteresis of 15 mV. Also includes a soft-switch section with ±30-mV input-signal differential voltage. TI recommends that the Hall input level is a minimum of 100 mV_{p-p}.
CT	11	O	Connection to the lock detection capacitor (see *10 in Figure 5) The constant current charge and discharge circuits cause locking when the pin voltage rises to 3 V and unlocking when pin voltage falls to 1.1 V. Connect to GND when not used (when locking is not necessary).
S-S	12	I	Connection to the soft-start setting capacitor (see *11 in Figure 5) Connect the capacitor between S-S and 5VREG to set the soft-start time, according to the capacitance that is chosen (see Figure 3 and Figure 4). Connect to GND when not used.
5VREG	13	O	5-V regulator output
SGND	14		System ground (see *1 in Figure 5) Connection to the control-circuit power-supply system
OUT1N	15	O	Lower-side driver output
OUT1P	16	O	Upper-side driver output

Copyright © 2009–2015, Texas Instruments Incorporated

6 Specifications

6.1 Absolute Maximum Ratings

over operating free-air temperature range (unless otherwise noted) (1)

			MIN	MAX	UNIT
V_{CC}	Supply voltage			18	V
V_{OUT}	Output voltage	OUT1P, OUT1N, OUT2P, OUT2N		18	V
I_{OUT}	Continuous output current	OUT1N, OUT2N		–20	mA
		OUT1P, OUT2P		20	
V_{VTH} V_{RMI}	Input voltage	VTH, RMI		7	V
V_{S-S}	Input/output voltage	S-S		7	V
V_{FG}	Output voltage	FG		19	V
I_{FG}	Continuous output current	FG		10	mA
I_{5VREG}	Continuous output current	5VREG		–20	mA
T_{stg}	Storage temperature		–65	150	°C

(1) Stresses beyond those listed under *Absolute Maximum Ratings* may cause permanent damage to the device. These are stress ratings only, which do not imply functional operation of the device at these or any other conditions beyond those indicated under *Recommended Operating Conditions*. Exposure to absolute-maximum-rated conditions for extended periods may affect device reliability.

6.2 ESD Ratings

			VALUE	UNIT
$V_{(ESD)}$	Electrostatic discharge	Human body model (HBM), per ANSI/ESDA/JEDEC JS-001, all pins (1)	±2500	V
		Charged device model (CDM), per JEDEC specification JESD22-C101, all pins (2)	±1000	

(1) JEDEC document JEP155 states that 500-V HBM allows safe manufacturing with a standard ESD control process.
(2) JEDEC document JEP157 states that 250-V CDM allows safe manufacturing with a standard ESD control process.

6.3 Recommended Operating Conditions

T_A = 25°C

		MIN	MAX	UNIT
V_{CC}	Supply voltage	6	16	V
V_{VTH}	VTH input voltage	0	5	V
V_{RMI}	RMI input voltage	0	5	V
V_{ICM}	Hall input common phase input voltage	0.2	3	V
T_A	Operating free-air temperature	–40	125	°C

6.4 Thermal Information

THERMAL METRIC (1)		TMP815 PW (TSSOP) 16 PINS	UNIT
$R_{\theta JA}$	Junction-to-ambient thermal resistance	108	°C/W
$R_{\theta JC(top)}$	Junction-to-case (top) thermal resistance	94.2	°C/W
$R_{\theta JB}$	Junction-to-board thermal resistance	31.5	°C/W
ψ_{JT}	Junction-to-top characterization parameter	38.9	°C/W
ψ_{JB}	Junction-to-board characterization parameter	1.9	°C/W
$R_{\theta JC(bot)}$	Junction-to-case (bottom) thermal resistance	38.3	°C/W

(1) For more information about traditional and new thermal metrics, see the *Semiconductor and IC Package Thermal Metrics* application report, SPRA953.

Copyright © 2009–2015, Texas Instruments Incorporated

6.5 Electrical Characteristics

V_{CC} = 12 V, T_A = 25°C (unless otherwise noted)

PARAMETER			TEST CONDITIONS		MIN	TYP	MAX	UNIT
V_{5VREG}	Output voltage	5VREG	I_{5VREG} = –5 mA	T_A = 25°C	4.8	4.95	5.1	V
				T_A = –40°C to +125°C			5.2	
V_{LIM}	Current limiting voltage	SENSE	T_A = 25°C		185	200	215	mV
			T_A = –40°C to +125°C				250	
V_{CPWMH}	High-level output voltage	CPWM			2.8	3	3.2	V
V_{CPWML}	Low-level output voltage				0.9	1.1	1.3	V
I_{CPWM1}	Charge current		V_{CPWM} = 0.5 V		24	30	36	µA
I_{CPWM2}	Discharge current		V_{CPWM} = 3.5 V		21	27	33	µA
f_{PWM}	Oscillation frequency		CP = 220 pF			30		kHz
V_{CTH}	High-level output voltage	CT			2.8	3	3.2	V
V_{CTL}	Low-level output voltage				0.9	1.1	1.3	V
I_{CT1}	Charge current				1.6	2	2.5	µA
I_{CT2}	Discharge current				0.16	0.2	0.25	µA
R_{CT}	Charge/discharge current ratio				8	10	12	
I_{S-S}	Discharge current	S-S	V_{S-S} = 1 V		0.4	0.5	0.6	µA
V_{ONH}	High-level output voltage	OUT_N	I_{OH} = –10 mA		V_{CC} – 1	V_{CC} – 0.85		V
V_{ONL}	Low-level output voltage		I_{OL} = 10 mA	T_A = 25°C		0.9	1	V
				T_A = –40°C to +125°C			1.05	
V_{OPL}	Low-level output voltage	OUT_P	I_{OL} = 10 mA			0.5	0.65	V
V_{HN}	Hall input sensitivity	IN+, IN-	IN+, IN– differential voltage (including offset and hysteresis)			±10	±20	mV
V_{FG}	Low-level output voltage	FG	I_{FG} = 5 mA	T_A = 25°C		0.15	0.3	V
				T_A = –40°C to +125°C			0.41	
I_{FGL}	Output leakage current		V_{FG} = 19 V				20	µA
I_{VTH} I_{RMI}	Bias current	VTH, RMI	V_{CPWM} = V_{VTH} = V_{RMI} = 2 V, V_{CT} = 0 V				0.1	µA
I_{CC}	Supply current	V_{CC}	During drive		4	7.5	9.5	mA
			During lock protection		4	7.5	9.5	

6.6 Typical Characteristics

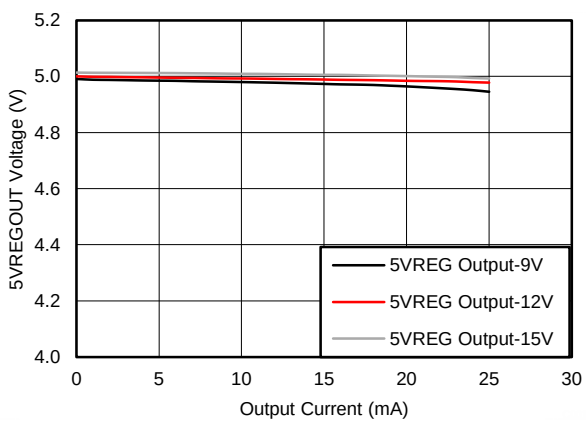

Figure 1. 5VREG Output Voltage (V) vs Output Current (mA)

7 Detailed Description

7.1 Overview

The TMP815 device is a single phase bipolar predriver which uses the hall sensor and speed control inputs for driving the single phase motor connected through the H Bridge. The predriver outputs are designed for driving top side P-channel and bottom side N-channel FETs in the bridge. Multiple protections like overcurrent, soft start, speed control, lock detect, speed feedback and minimum speed are incorporated in the device.

7.2 Functional Block Diagram

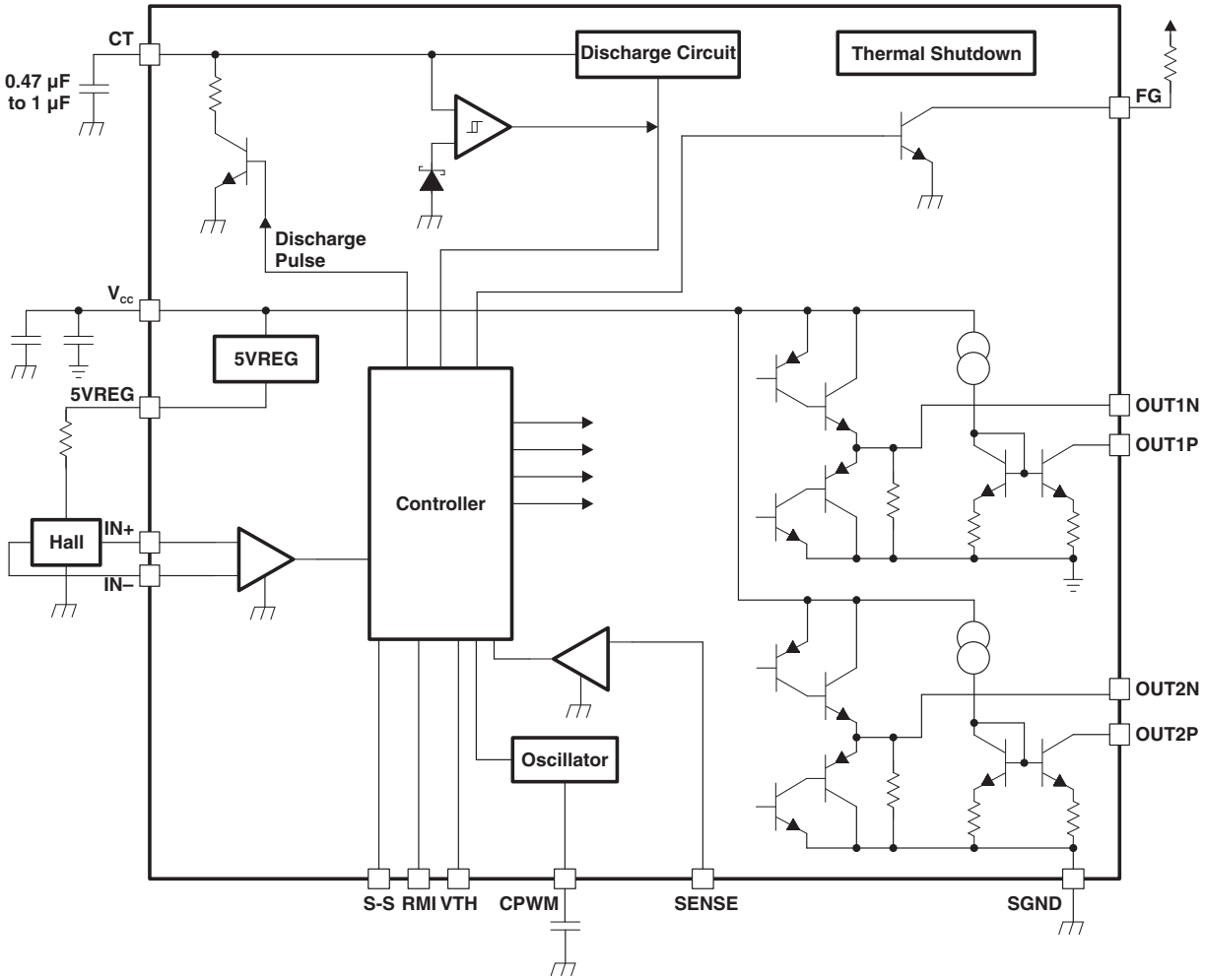

Copyright © 2009–2015, Texas Instruments Incorporated

7.3 Feature Description

7.3.1 Speed Control

The speed control functionality is obtained by VTH pin of the device. For pulsed inputs, the user can supply a 20-kHz to 100-kHz frequency input (20 kHz to 50 kHz recommended) on the pin with a current limiting resistor in between.

If not used, this pin needs to be connected to ground for full speed.

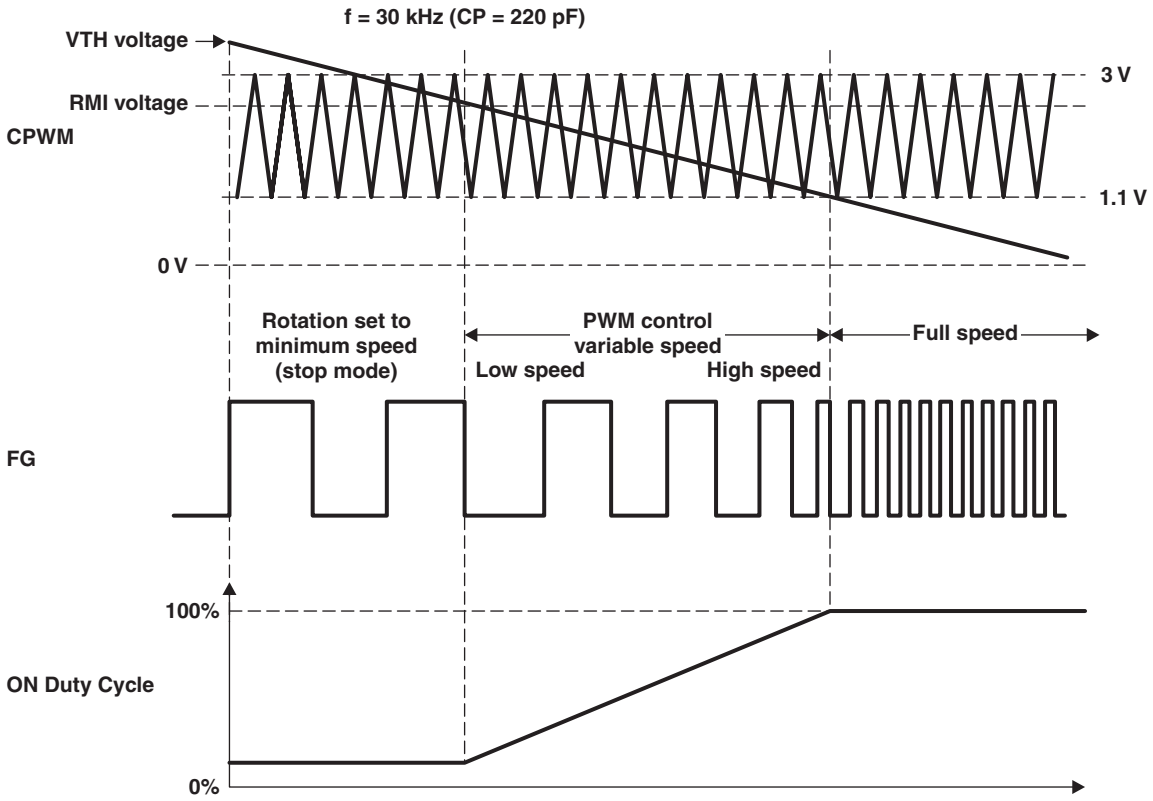

A. Minimum speed setting (stop) mode. The low speed fan rotation occurs at the minimum speed set with the RMI pin. When the minimum speed is not set (RMI pin pulled up to 5VREG), the motor stops.

B. Low ↔ high-speed. PWM control is made by comparing the CPWM oscillation voltage (1.1 V ↔ 3 V) and VTH voltage. Both upper and lower output TRs are turned ON when the VTH voltage is low. The upper output TR is turned OFF when the VTH voltage is high, regenerating the coil current in the lower TR. Therefore, as the VTH voltage decreases, the output on duty cycle increases, causing an increase in the coil current, raising the motor rotation speed. The rotation speed can be monitored with the FG output.

C. Full-speed mode. The full-speed mode becomes effective with the VTH voltage of 1.65 V or less. (VTH must be equal to GND when the speed control is not used.)

D. PWM-IN input disconnection mode. The full-speed mode becomes effective when the VTH voltage is 1.1 V or less. Set VTH = GND when the speed control is not used.

Figure 2. Speed Control Timing

7.3.2 Soft-Start

The speed control functionality is obtained by S-S pin of the device. Connection to the soft-start setting capacitor (see Figure 5) is through this pin. Connect the capacitor between S-S and 5VREG to set the soft-start time, according to the capacitance that is chosen (see Figure 3 and Figure 4). If the soft-start feature is not intended to be used, then the this pin needs to be connected to ground.

Feature Description (continued)

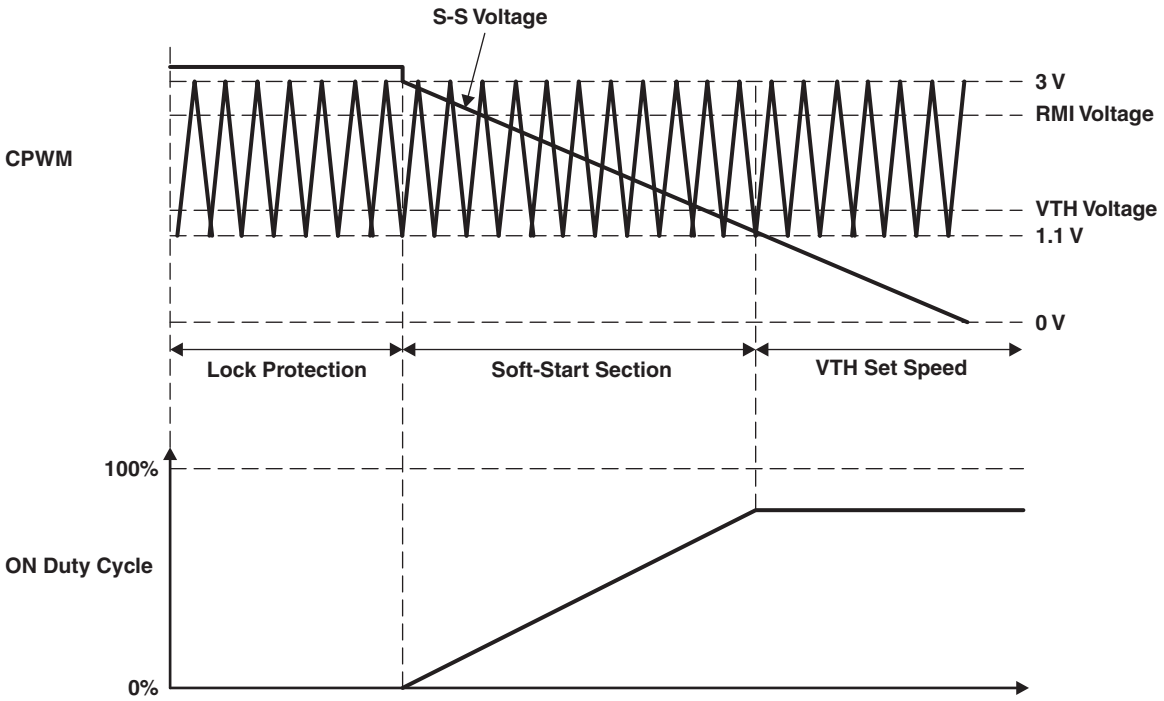

Adjust the S-S pin voltage gradient by means of the capacitance of the oscillator between the S-S pin and 5VREG. Recommended capacitance is 0.1 µF to 1 µF.

Figure 3. Soft-Start Timing ($V_{VTH} < V_{RMI}$)

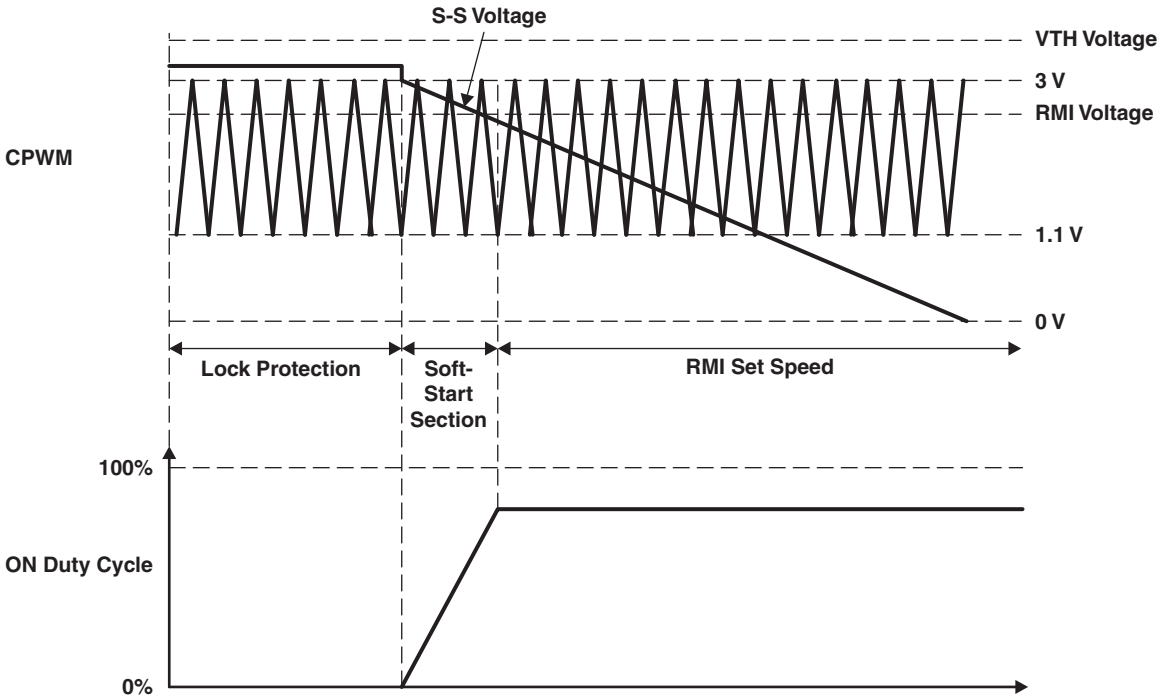

Adjust the S-S pin voltage gradient by means of the capacitance of the oscillator between the S-S pin and 5VREG. Recommended capacitance is 0.1 µF to 1 µF.

Figure 4. Soft-Start Timing ($V_{VTH} > V_{RMI}$)

Copyright © 2009–2015, Texas Instruments Incorporated

Feature Description (continued)

7.3.3 Lock Detection

When the rotor is locked by external means or load conditions, The lock detection feature helps to protect the circuit by not allowing the current to rise beyond control. A hiccup mechanism is also provided. The lock detection is enabled by a connection to the lock detection capacitor (see *10 in Figure 5) The constant current charge and discharge circuits cause drive stop when the pin voltage rises to 3 V and unlocking the drive when pin voltage falls to 1.1 V. If lock detection feature is not desired in the application, this pin needs to be connected to ground.

7.3.4 Current Limit

Current limit resistor is connected in a return path of H Bridge connection. This input is connected to the SENSE pin where the Current is limited when the voltage across this resistor crosses 200-mV threshold. The device enters in lower regeneration mode (see *8 in Figure 5) If not used, this pin needs to be connected to ground.

7.3.5 Minimum Speed Setting

Minimum speed setting (see *6 in Figure 5) feature is use with the RMI pin in the device. Connect to 5VREG with a pullup resistor if not used.

7.3.6 Speed Output

The speed of the motor while running can be observed at the FG pin which is an open collector output and needs to be pulled high for using it.

7.3.7 Drive Frequency Selection

The P channel switches in the device are switched with higher frequency whose duty cycle is decided by the speed control input. The frequency of the operation can be decided by the capacitor connected at the CPWM pin. As this is used also for the current limiting canceling signal, be sure to connect the capacitor even when speed control is not used.

7.4 Device Functional Modes

Table 1. Drive Lock Truth Table (1) (2)

IN–	IN+	CT	OUT1P	OUT1N	OUT2P	OUT2N	FG	MODE
H	L	L	L	L	OFF	H	L	OUT1 → 2 drive
L	H	L	OFF	H	L	L	OFF	OUT2 → 1 drive
H	L	H	OFF	L	OFF	H	L	Lock protection
L	H	H	OFF	H	OFF	L	OFF	

(1) For VTH, RMI, and S-S pins, see Figure 2.
(2) CPWM = H, VTH = RMI = S-S = L

Table 2. Speed Control Truth Table (1) (2)

VTH, RMI	CPWM	IN–	IN+	OUT1P	OUT1N	OUT2P	OUT2N	MODE
L	H	H	L	L	L	OFF	H	OUT1 → 2 Drive
L	H	L	H	OFF	H	L	L	OUT2 → 1 Drive
H	L	H	L	OFF	L	OFF	H	Regeneration mode
H	L	L	H	OFF	H	OFF	L	

(1) For VTH, RMI, and S-S pins, see Figure 2.
(2) CT = S-S = L

Copyright © 2009–2015, Texas Instruments Incorporated

8 Application and Implementation

NOTE

Information in the following applications sections is not part of the TI component specification, and TI does not warrant its accuracy or completeness. TI's customers are responsible for determining suitability of components for their purposes. Customers should validate and test their design implementation to confirm system functionality.

8.1 Application Information

The TMP815 device needs few external components for the features described in *Feature Description* . The device needs a 1-uF or greater capacitor connected at VCC. The device generates 5-V regulated output which can be used for pullups in the circuit as well as the Hall sensor.

Copyright © 2009–2015, Texas Instruments Incorporated

8.2 Typical Application

Figure 5 shows the typical application diagram.

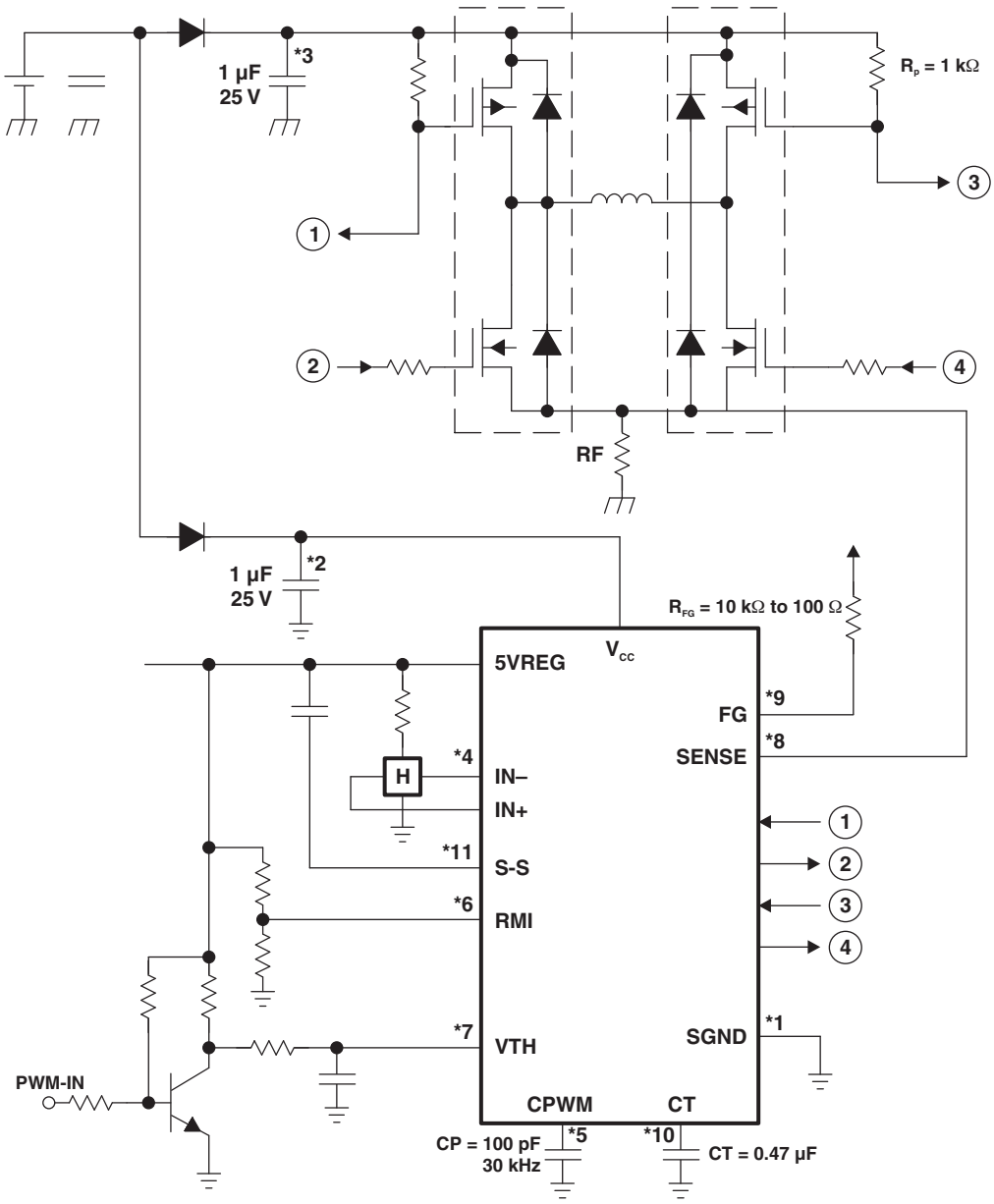

Figure 5. 12-V Sample Application Circuit

8.2.1 Design Requirements

For this design example, use the following parameters:

- Input Voltage: 6 to 16 V
- VCC capacitor: 1 µF or more
- H Bridge top side: P-channel FETs
- H Bridge bottom side: N-channel FETs

Typical Application (continued)

8.2.2 Detailed Design Procedure

Pins:

- CPWM Capacitor: 220 pF for 30-kHz switching or appropriate.
- VTH Pin connected to Ground for Full speed or supplied with pulsed input
- RMI Pin Pulled high to 5VREG output or external connection if required
- 5VREG connected to Hall Sensor. Hall sensor differential inputs connected to IN+ and IN-
- Current sense resistor connected to SENSE pin or GND.
- CT connected to Lock Detection capacitor (0.47 uF or calculated values) or to GND
- Drive outputs connected to the Gates of the H bridge switches.
- Pull up on FG.

Power Supply:

- Make sure the power supply has set with sufficient current limit at the decided at the motor voltage.

Build the circuit with the recommended connections at the pins.

Test the motor circuit with hardware connected to it.

8.2.3 Application Curves

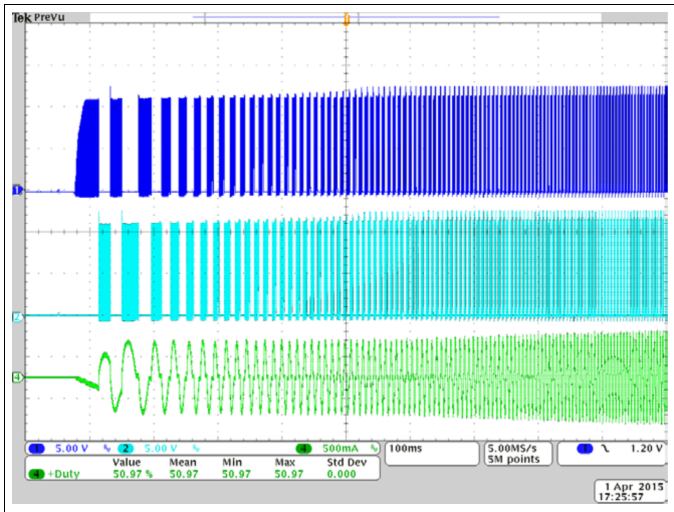

Figure 6. Start-up at 12 V (Soft Start)

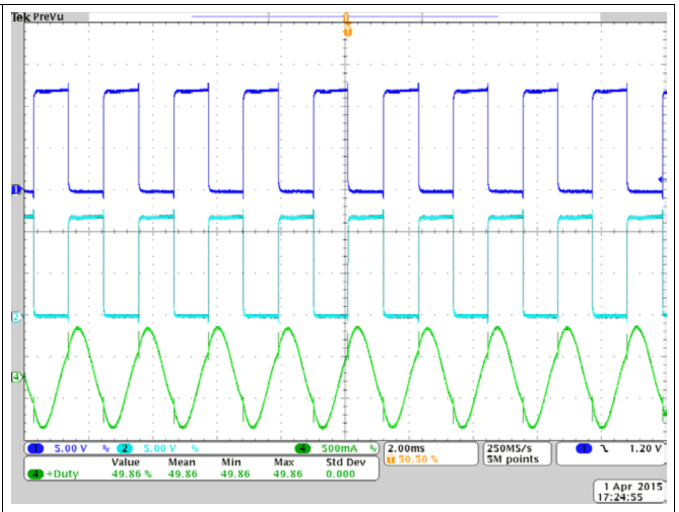

Figure 7. Motor Outputs and Phase Current at 100% Duty Cycle

Copyright © 2009–2015, Texas Instruments Incorporated

Typical Application (continued)

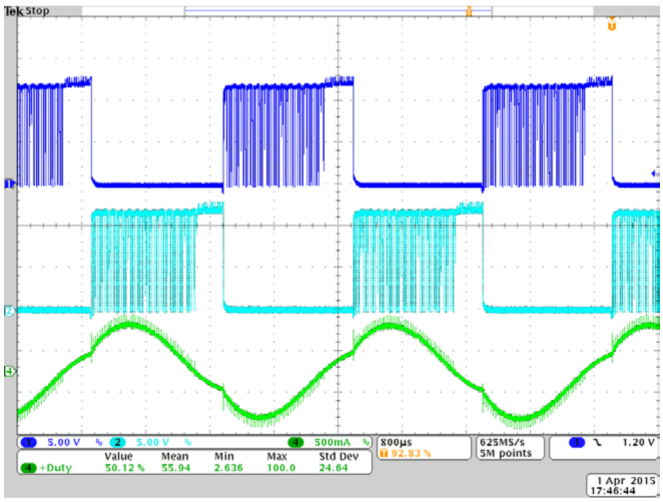

Figure 8. Motor Outputs and Phase Current at Duty Cycle < 100%

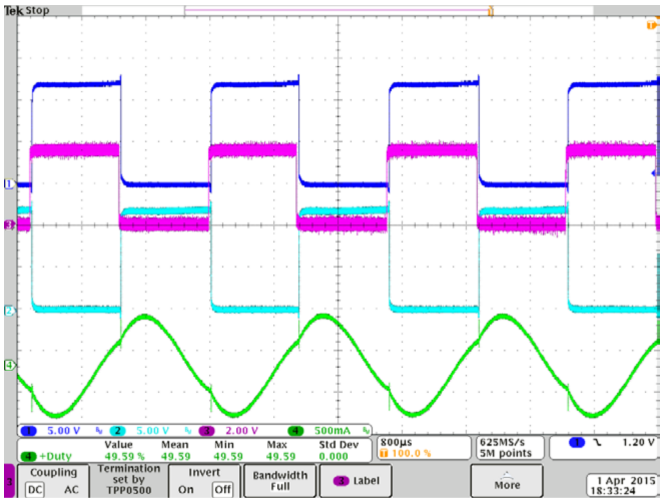

Figure 9. Motor Outputs and Phase Currents at 100% Duty Cycle and With Hall Sensor Data

9 Power Supply Recommendations

For testing purposes, a current limited source can be connected with voltage from 6 to 16 V on printed-circuit-board. Use a 1-µF capacitor (minimum) to take care of load transient requirements.

10 Layout

10.1 Layout Guidelines

Connect 1-µF capacitor or greater between VCC and SGND with short traces.

Connect a capacitor between IN+ and IN- for noise reduction picked from Hall sensors.

Keep S-S, CT and CPWM capacitor near the device.

10.2 Layout Example

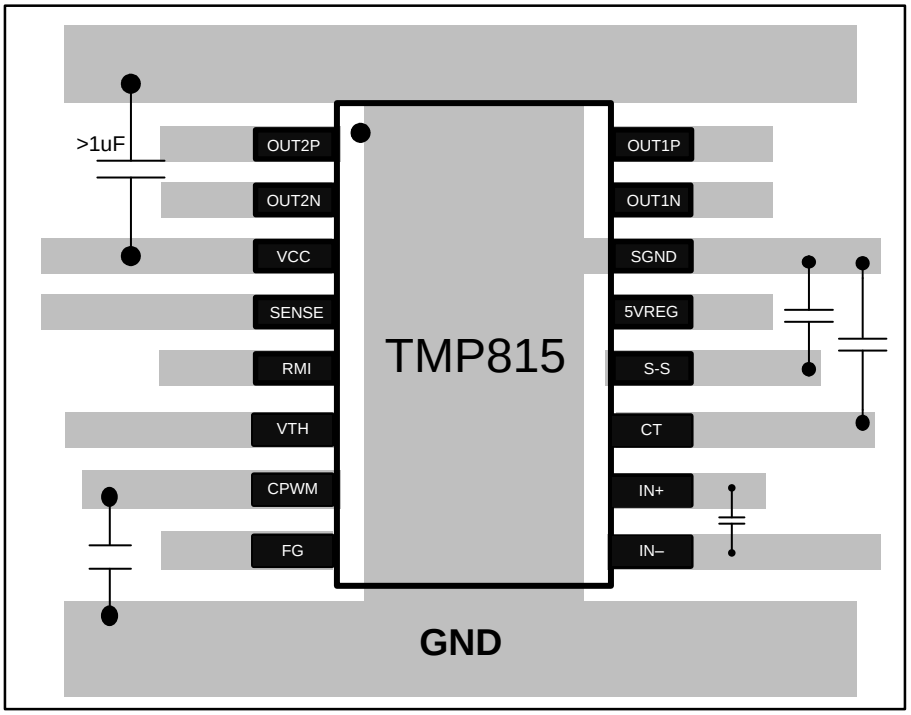

Figure 10. Recommended Layout Example

Copyright © 2009–2015, Texas Instruments Incorporated

11 Device and Documentation Support

11.1 Community Resource

The following links connect to TI community resources. Linked contents are provided "AS IS" by the respective contributors. They do not constitute TI specifications and do not necessarily reflect TI's views; see TI's Terms of Use.

TI E2E™ Online Community ***TI's Engineer-to-Engineer (E2E) Community.*** Created to foster collaboration among engineers. At e2e.ti.com, you can ask questions, share knowledge, explore ideas and help solve problems with fellow engineers.

Design Support ***TI's Design Support*** Quickly find helpful E2E forums along with design support tools and contact information for technical support.

11.2 Trademarks

E2E is a trademark of Texas Instruments.
All other trademarks are the property of their respective owners.

11.3 Electrostatic Discharge Caution

These devices have limited built-in ESD protection. The leads should be shorted together or the device placed in conductive foam during storage or handling to prevent electrostatic damage to the MOS gates.

11.4 Glossary

SLYZ022 — *TI Glossary*.

This glossary lists and explains terms, acronyms, and definitions.

12 Mechanical, Packaging, and Orderable Information

The following pages include mechanical, packaging, and orderable information. This information is the most current data available for the designated devices. This data is subject to change without notice and revision of this document. For browser-based versions of this data sheet, refer to the left-hand navigation.

TAPE AND REEL INFORMATION

REEL DIMENSIONS

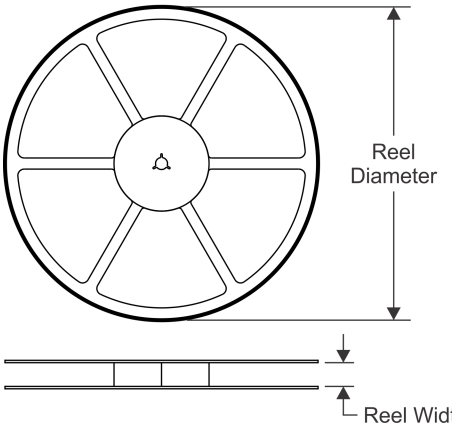

TAPE DIMENSIONS

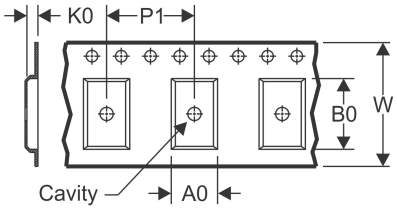

A0	Dimension designed to accommodate the component width
B0	Dimension designed to accommodate the component length
K0	Dimension designed to accommodate the component thickness
W	Overall width of the carrier tape
P1	Pitch between successive cavity centers

QUADRANT ASSIGNMENTS FOR PIN 1 ORIENTATION IN TAPE

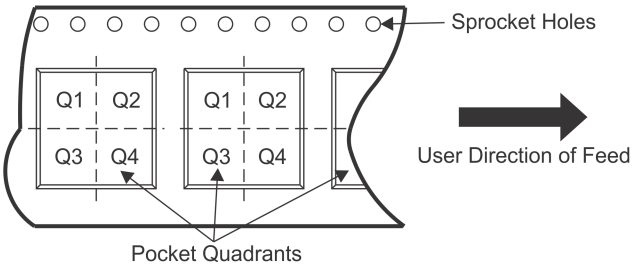

*All dimensions are nominal

Device	Package Type	Package Drawing	Pins	SPQ	Reel Diameter (mm)	Reel Width W1 (mm)	A0 (mm)	B0 (mm)	K0 (mm)	P1 (mm)	W (mm)	Pin1 Quadrant
TMP815PWR	TSSOP	PW	16	2000	330.0	12.4	6.9	5.6	1.6	8.0	12.0	Q1

TAPE AND REEL BOX DIMENSIONS

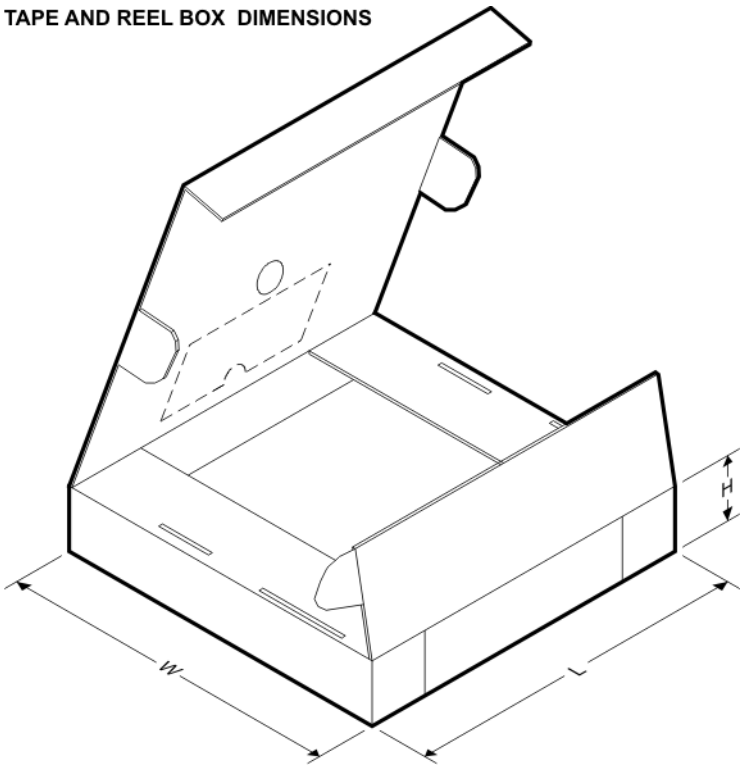

*All dimensions are nominal

Device	Package Type	Package Drawing	Pins	SPQ	Length (mm)	Width (mm)	Height (mm)
TMP815PWR	TSSOP	PW	16	2000	367.0	367.0	35.0

PW0016A

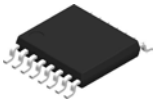

PACKAGE OUTLINE

TSSOP - 1.2 mm max height

SMALL OUTLINE PACKAGE

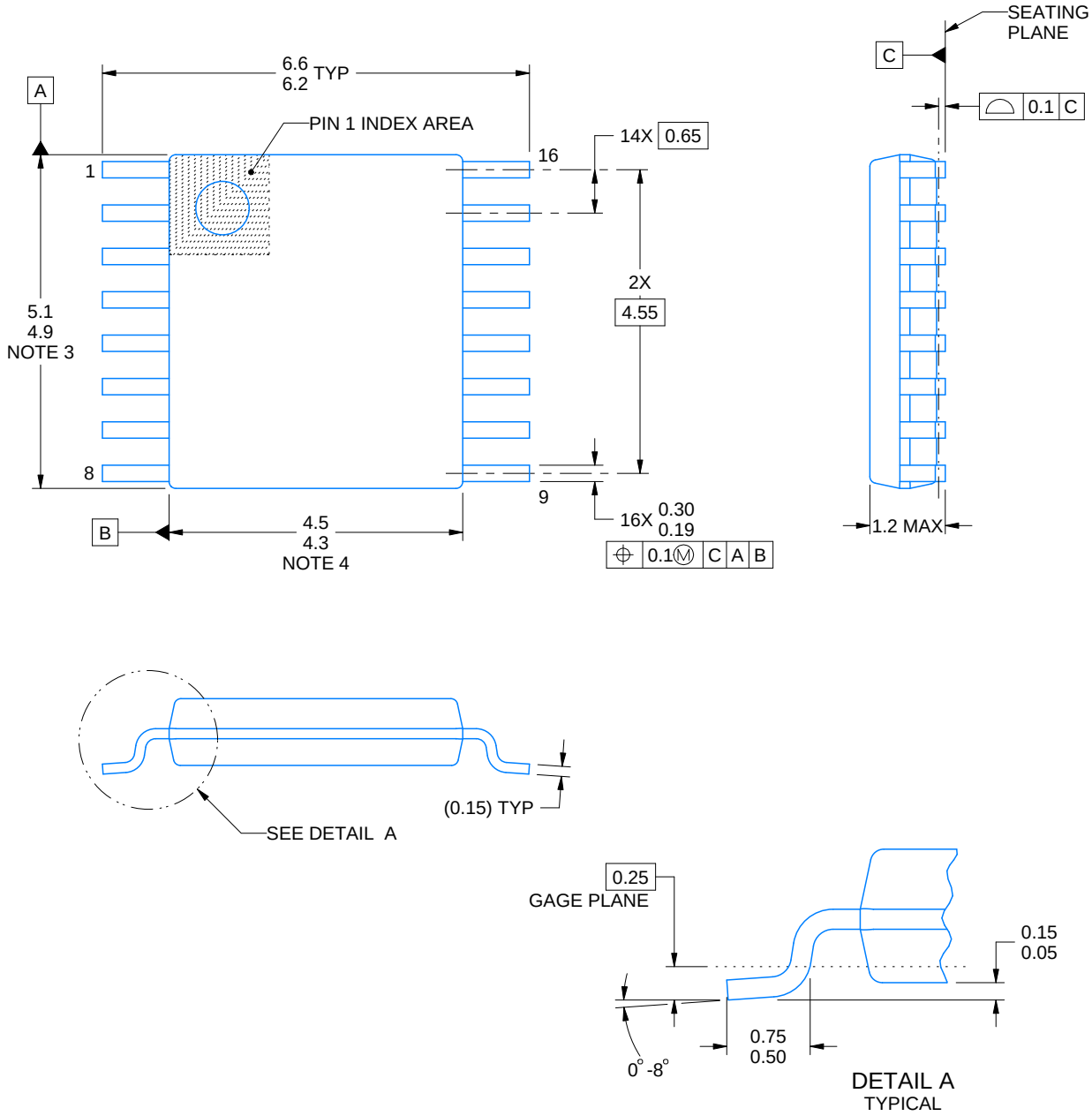

NOTES:

1. All linear dimensions are in millimeters. Any dimensions in parenthesis are for reference only. Dimensioning and tolerancing per ASME Y14.5M.
2. This drawing is subject to change without notice.
3. This dimension does not include mold flash, protrusions, or gate burrs. Mold flash, protrusions, or gate burrs shall not exceed 0.15 mm per side.
4. This dimension does not include interlead flash. Interlead flash shall not exceed 0.25 mm per side.
5. Reference JEDEC registration MO-153.

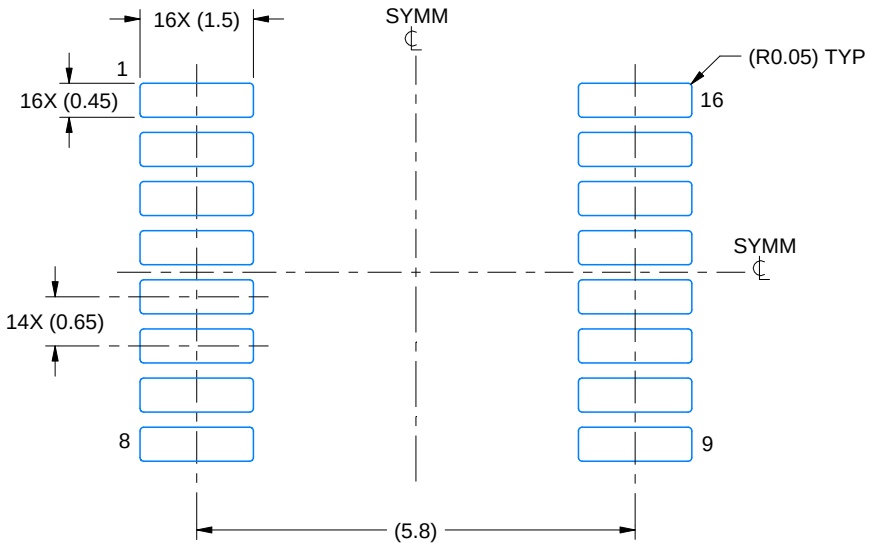

LAND PATTERN EXAMPLE
EXPOSED METAL SHOWN
SCALE: 10X

NON-SOLDER MASK DEFINED (PREFERRED)

SOLDER MASK DEFINED

SOLDER MASK DETAILS

4220204/A 02/2017

NOTES: (continued)

6. Publication IPC-7351 may have alternate designs.
7. Solder mask tolerances between and around signal pads can vary based on board fabrication site.

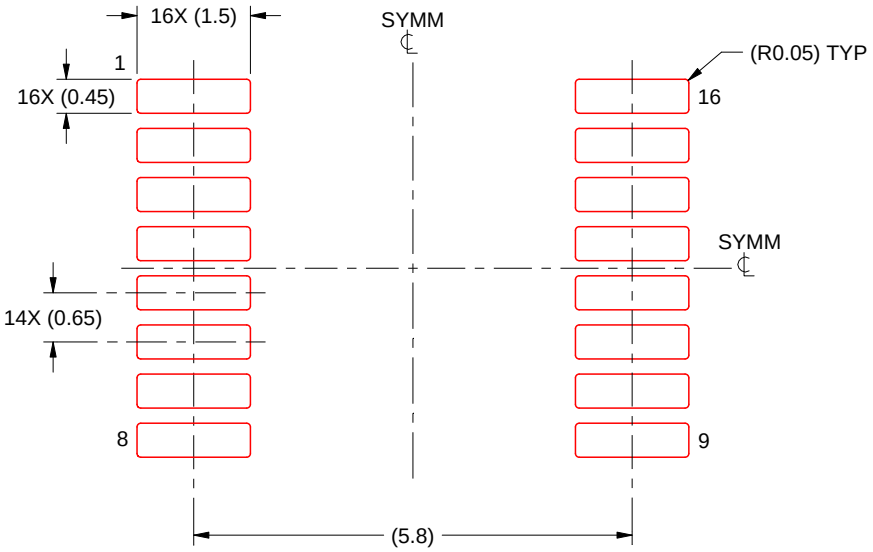

SOLDER PASTE EXAMPLE
BASED ON 0.125 mm THICK STENCIL
SCALE: 10X

4220204/A 02/2017

NOTES: (continued)

8. Laser cutting apertures with trapezoidal walls and rounded corners may offer better paste release. IPC-7525 may have alternate design recommendations.
9. Board assembly site may have different recommendations for stencil design.

IMPORTANT NOTICE AND DISCLAIMER

TI PROVIDES TECHNICAL AND RELIABILITY DATA (INCLUDING DATASHEETS), DESIGN RESOURCES (INCLUDING REFERENCE DESIGNS), APPLICATION OR OTHER DESIGN ADVICE, WEB TOOLS, SAFETY INFORMATION, AND OTHER RESOURCES “AS IS” AND WITH ALL FAULTS, AND DISCLAIMS ALL WARRANTIES, EXPRESS AND IMPLIED, INCLUDING WITHOUT LIMITATION ANY IMPLIED WARRANTIES OF MERCHANTABILITY, FITNESS FOR A PARTICULAR PURPOSE OR NON-INFRINGEMENT OF THIRD PARTY INTELLECTUAL PROPERTY RIGHTS.

These resources are intended for skilled developers designing with TI products. You are solely responsible for (1) selecting the appropriate TI products for your application, (2) designing, validating and testing your application, and (3) ensuring your application meets applicable standards, and any other safety, security, or other requirements. These resources are subject to change without notice. TI grants you permission to use these resources only for development of an application that uses the TI products described in the resource. Other reproduction and display of these resources is prohibited. No license is granted to any other TI intellectual property right or to any third party intellectual property right. TI disclaims responsibility for, and you will fully indemnify TI and its representatives against, any claims, damages, costs, losses, and liabilities arising out of your use of these resources.

TI’s products are provided subject to TI’s Terms of Sale (www.ti.com/legal/termsofsale.html) or other applicable terms available either on ti.com or provided in conjunction with such TI products. TI’s provision of these resources does not expand or otherwise alter TI’s applicable warranties or warranty disclaimers for TI products.

Mailing Address: Texas Instruments, Post Office Box 655303, Dallas, Texas 75265
Copyright © 2018, Texas Instruments Incorporated