Dual 1.3A White LED Step-Up Converters with Wide Dimming

FEATURES

- **Wide (1000:1) PWM Dimming Range with No ColorShift**
- **Independent Dimming and Shutdown Control of the LED Drivers**
- **Drives Up to 16 White LEDs at 25mA (8 per Driver) from a Single Li-Ion Cell**
- **Drives Up to 16 White LEDs at 100mA (8 per Driver) from 12V Supply**
- **±3% LED Current Programming Accuracy**
- **Open LED Protection: 36V Clamp Voltage**
- Fixed Frequency Operation: Up to 2.5MHz
- Wide Input Voltage Range: 2.5V to 24V
- Low Shutdown Current: ICC < 1μA
- Overtemperature Protection
- Available in (5mm × 3mm × 0.75mm) 16-Pin DFN and 16-Pin Thermally Enhanced TSSOP Packages

APPLICATIONS

- Notebook PC Display
- LED Camera Light for Cell Phones
- Car Dashboard Lighting
- Avionics Displays

DESCRIPTION

The LT®3486 is a dual step-up DC/DC converter specifically designed to drive up to 16 White LEDs (8 in series per converter) at constant current from a single Li-Ion cell. Series connection of the LEDs provides identical LED currents resulting in uniform brightness. The two independent converters are capable of driving asymmetric LED strings.

The dimming of the two LED strings can be controlled independently via the respective CTRL pins. An internal dimming system allows the dimming range to be extended up to 1000:1 by feeding a PWM signal to the respective PWM pins. The LT3486 operating frequency can be set with an external resistor over a 200kHz to 2.5MHz range. A low 200mV feedback voltage (±3% accuracy) minimizes power loss in the current setting resistor for better efficiency. Additional features include output voltage limiting when LEDs are disconnected and overtemperature protection.

The LT3486 is available in a space saving 16-pin DFN (5mm × 3mm × 0.75mm) and 16-pin thermally enhanced TSSOP packages.

LT, LTC, LTM, Linear Technology and the Linear logo are registered trademarks and ThinSOT is a trademark of Linear Technology Corporation. All other trademarks are the property of their respective owners.

TYPICAL APPLICATION

Li-Ion Powered Driver for Camera Flash and LCD Backlighting

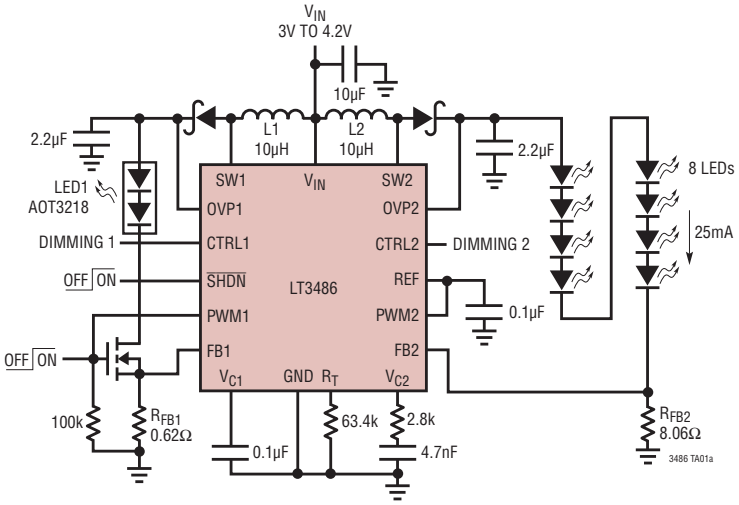

Efficiency vs V_{IN}

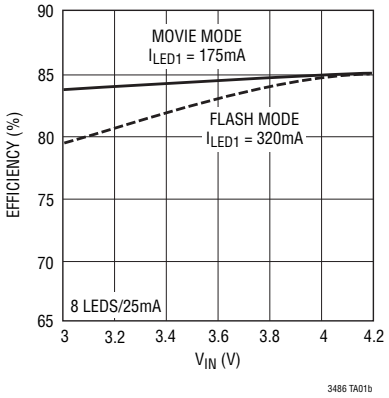

ABSOLUTE MAXIMUM RATINGS (Note 1)

Input Voltage (V_{IN}) 25V
$\overline{SHDN}$ Voltage 25V
SW1, SW2 Voltages 40V
OVP1, OVP2 Voltages 40V
CTRL1, CTRL2 Voltages 10V
PWM1, PWM2 Voltages 10V
FB1, FB2 Voltages 10V

Operating Junction Temperature Range (Note 2)
LT3486E ..... –40°C to 85°C
LT3486I ..... –40°C to 125°C
Storage Temperature Range
DFN ..... –65°C to 125°C
TSSOP ..... –65°C to 150°C
Maximum Junction Temperature ..... 125°C
Lead Temperature (Soldering, 10 sec, TSSOP) ..... 300°C

PIN CONFIGURATION

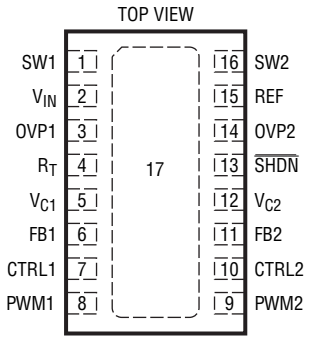

DHC PACKAGE
16-LEAD (5mm × 3mm) PLASTIC DFN
EXPOSED PAD (PIN 17) IS GND
MUST BE SOLDERED TO PCB

T_{JMAX} = 125°C, θ_{JA} = 43°C/W, θ_{JC} = 4°C/W

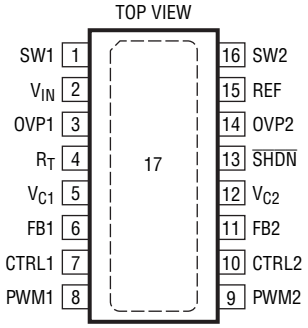

FE PACKAGE
16-LEAD PLASTIC TSSOP
EXPOSED PAD IS GND (PIN 17)
MUST BE SOLDERED TO PCB

T_{JMAX} = 125°C, θ_{JA} = 38°C/W, θ_{JC} = 10°C/W

ORDER INFORMATION

LEAD FREE FINISH	TAPE AND REEL	PART MARKING	PACKAGE DESCRIPTION	TEMPERATURE RANGE
LT3486EDHC#PBF	LT3486EDHC#TRPBF	3486	16-Lead (5mm × 3mm) Plastic DFN	–40°C to 85°C
LT3486EFE#PBF	LT3486EFE#TRPBF	3486EFE	16-Lead Plastic TSSOP	–40°C to 85°C
LT3486IFE#PBF	LT3486IFE#TRPBF	3486IFE	16-Lead Plastic TSSOP	–40°C to 125°C
LEAD BASED FINISH	**TAPE AND REEL**	**PART MARKING**	**PACKAGE DESCRIPTION**	**TEMPERATURE RANGE**
LT3486EDHC	LT3486EDHC#TR	3486	16-Lead (5mm × 3mm) Plastic DFN	–40°C to 85°C
LT3486EFE	LT3486EFE#TR	3486EFE	16-Lead Plastic TSSOP	–40°C to 85°C
LT3486IFE	LT3486IFE#TR	3486IFE	16-Lead Plastic TSSOP	–40°C to 125°C

Consult LTC Marketing for parts specified with wider operating temperature ranges.

For more information on lead free part marking, go to: http://www.linear.com/leadfree/
For more information on tape and reel specifications, go to: http://www.linear.com/tapeandreel/

ELECTRICAL CHARACTERISTICS

The ● denotes the specifications which apply over the full operating temperature range, otherwise specifications are at T_A = 25°C. V_{IN} = 3V, V_{CTRL1} = 3V, V_{CTRL2} = 3V, V_{PWM1} = 3V, V_{PWM2} = 3V, $V_{\overline{SHDN}}$ = 3V, unless otherwise noted.

PARAMETER	CONDITIONS		MIN	TYP	MAX	UNITS
Minimum Operating Voltage			2.5			V
Maximum Operating Voltage					24	V
Feedback Voltage (FB1, FB2)		●	194	200	206	mV
Offset between FB1 and FB2	V_{OS} = |FB1-FB2|		0	3	6	mV
Feedback Pin Bias Current (FB1, FB2)	V_{FB1} = V_{FB2} = 0.2V (Note 3)		10	45	100	nA
Quiescent Current	V_{FB1} = V_{FB2} = 1V $\overline{SHDN}$ = 0V, CTRL1 = CTRL2 = 0V			9 0.1	14 1	mA µA
Switching Frequency	R_T = 53.6k R_T = 20.5k	 ●	0.75 1.7	1 2.2	1.25 2.7	MHz MHz
Oscillator Frequency Range (Typical Value)	(Note 4)		200		2500	kHz
Nominal R_T Pin Voltage	R_T = 53.6k			0.54		V
Maximum Duty Cycle	R_T = 53.6k R_T = 20.5k R_T = 309k	●	90	96 90 98		% % %
Switch Current Limit (SW1, SW2)			1	1.3	1.6	A
Switch V_{CESAT}	I_{SW1} = I_{SW2} = 0.75A			300		mV
Switch Leakage Current	V_{SW1} = V_{SW2} = 10V			0.1	5	µA
Error Amplifier Transconductance	ΔI = ±5µA			220		µA/V
Error Amplifier Voltage Gain				120		
V_{C1}, V_{C2} Switching Threshold				0.85		V
V_{C1}, V_{C2} Clamp Voltage				1.5		V
V_{C1}, V_{C2} Source Current	V_{FB1} = V_{FB2} = 0V			25		µA
V_{C1}, V_{C2} Sink Current	V_{FB1} = V_{FB2} = 1V			25		µA
V_{C1}, V_{C2} Pin Leakage Current	V_{C1} = V_{C2} = 1V, V_{PWM1} = V_{PWM2} = 0V			1	10	nA
OVP1, OVP2 Overvoltage Threshold Voltage			34	35	36	V
CTRL1, CTRL2 Voltages to Turn Off LED1, 2 Currents		●			75	mV
CTRL1, CTRL2 Voltages to Turn On LED1, 2 Currents			150			mV
CTRL1, CTRL2 Voltages for Full LED1, 2 Currents			1.8			V
CTRL1, CTRL2 Pin Bias Current	V_{CTRL1} = V_{CTRL2} = 3V	●	20	30	40	µA
PWM1, PWM2 Voltage High		●	0.9			V
PWM1, PWM2 Voltage Low		●			0.4	V
PWM1, PWM2 Pin Bias Current	V_{PWM1} = V_{PWM2} = 3V			0.1	1	µA
$\overline{SHDN}$ Voltage High			1.6			V
$\overline{SHDN}$ Voltage Low					0.4	V
$\overline{SHDN}$ Pin Bias Current	$V_{\overline{SHDN}}$ = 3V			20		µA
REF Voltage	I_{REF} = 10µA		1.2	1.25	1.3	V
REF Source Current		●	50	80		µA

Note 1: Stresses beyond those listed under Absolute Maximum Ratings may cause permanent damage to the device. Exposure to any Absolute Maximum Rating condition for extended periods may affect device reliability and lifetime.

Note 2: The LT3486E is guaranteed to meet specified performance from 0°C to 85°C and is designed, characterized and expected to meet these extended temperature limits, but is not tested at –40°C and 85°C. The LT3486I specifications are guaranteed over the –40°C to 125°C temperature range.

Note 3: Current flows out of the pin.

Note 4: Guaranteed by design and test correlation, not production tested.

TYPICAL PERFORMANCE CHARACTERISTICS

T_A = 25°C unless otherwise specified.

Switching Waveforms

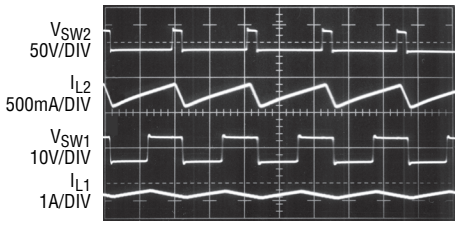

V_{IN} = 3.6V 0.5µs/DIV
8 LEDs/25mA
2 LEDs/320mA
CIRCUIT OF FRONT PAGE APPLICATION

PWM Dimming Wavforms

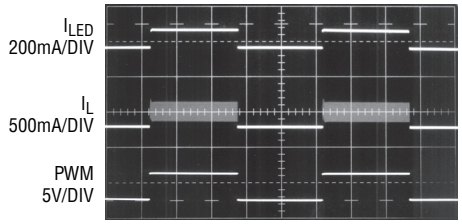

V_{IN} = 12V 0.2ms/DIV
8/8 LEDs
PWM FREQ = 1kHz

LED Current vs PWM Duty Cycle Wide Dimming Range (1000:1)

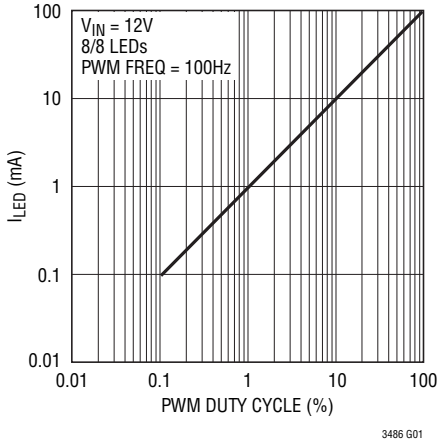

V_{FB} vs V_{CTRL}

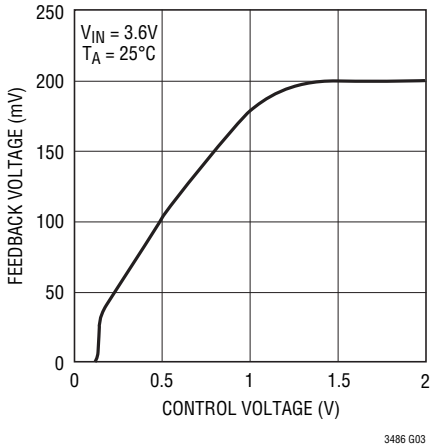

V_{FB} vs V_{CTRL} (Temperature Variation)

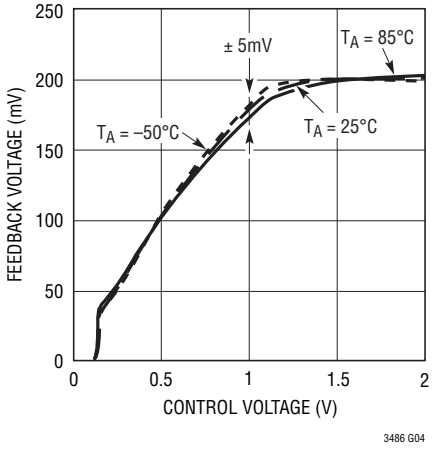

$\overline{SHDN}$ Pin Bias Current (CTRL1 = CTRL2 = 3V)

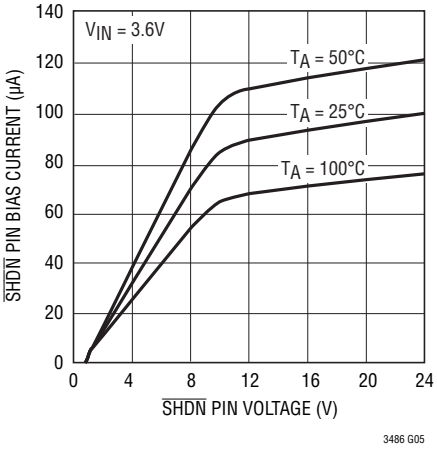

Open-Circuit Output Clamp Voltage vs Temperature

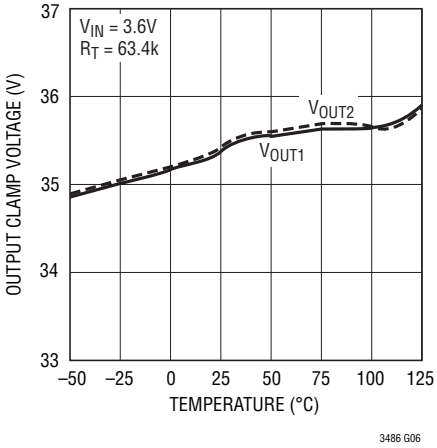

Open-Circuit Output Clamp Voltage vs V_{IN}

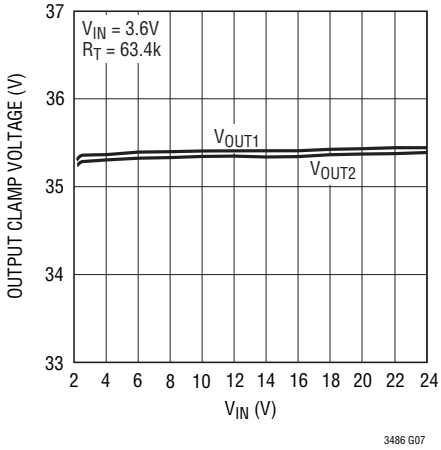

TYPICAL PERFORMANCE CHARACTERISTICS

T_A = 25°C unless otherwise specified.

Input Current with Output 1 and Output 2 Open Circuit

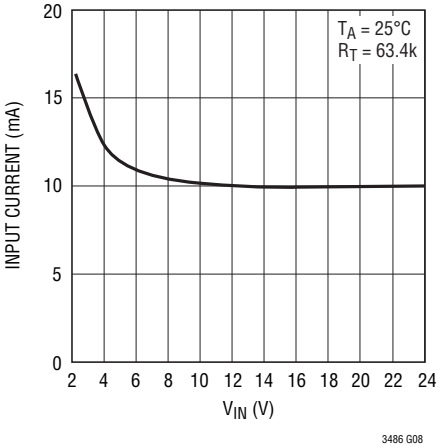

R_T vs Oscillator Frequency

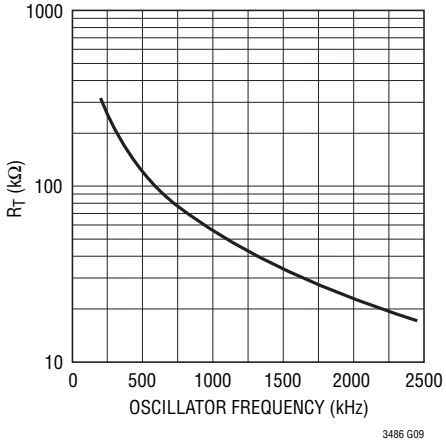

Oscillator Frequency vs V_{IN}

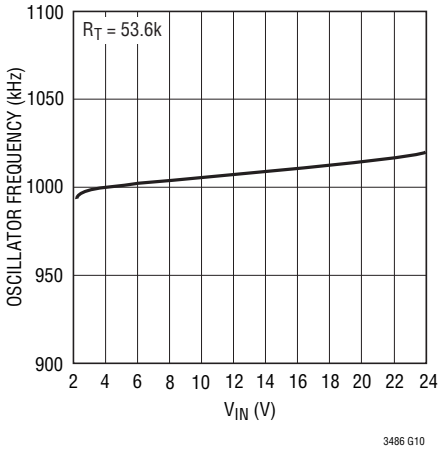

Oscillator Frequency vs Temperature

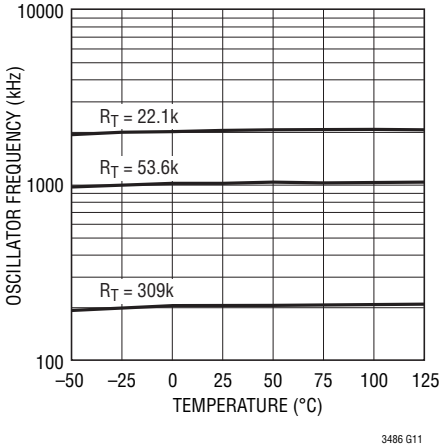

Quiescent Current vs V_{IN}

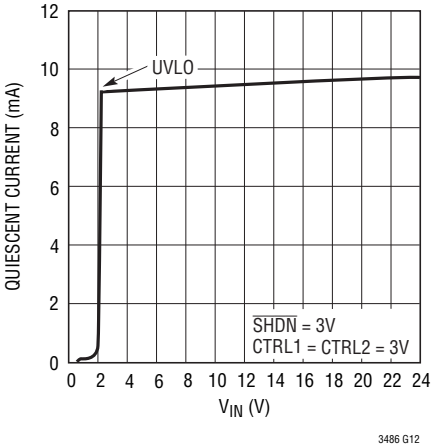

PWM Pin Input Bias Current

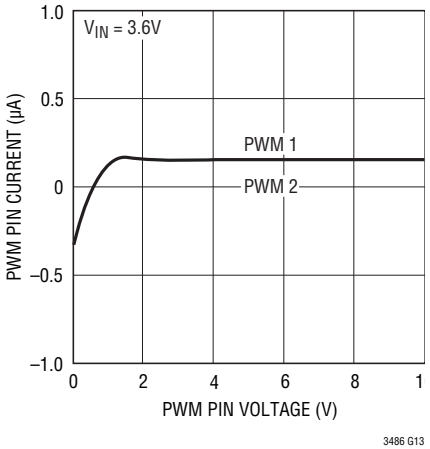

Switch Current Limit vs Duty Cycle

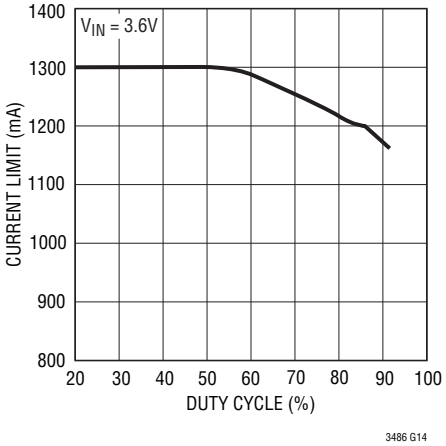

REF Voltage vs Temperature

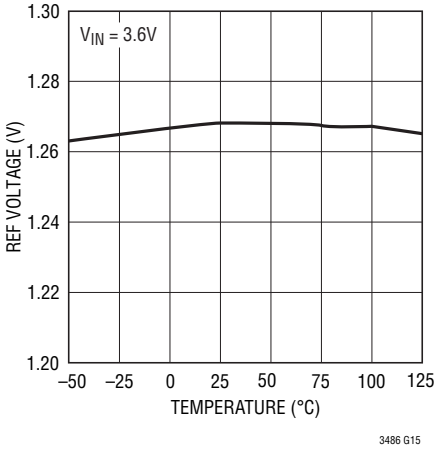

REF Voltage Load Regulation

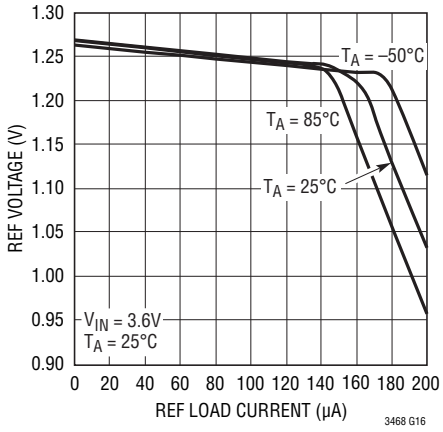

PIN FUNCTIONS

SW1, SW2 (Pins 1, 16): The SW Pins are the Collectors of the Internal Power Transistors. Connect the inductors and Schottky diodes to these pins. Minimize trace area at these pins to minimize EMI.

V_{IN} (Pin 2): Input Supply Pin. Must be locally bypassed with an X5R or X7R type ceramic capacitor.

OVP1, OVP2 (Pins 3, 14): Output Overvoltage Protection Pins. Connect these pins to the output capacitors. The on-chip voltage detectors monitor the voltages at these pins and limit it to 36V (typ) by turning off the respective switcher and pulling its V_C pin low.

R_T (Pin 4): Timing Resistor to Program the Switching Frequency. The switching frequency can be programmed from 200kHz to 2.5MHz.

V_{C1}, V_{C2} (Pins 5, 12): The V_C Pins are the Outputs of the Internal Error Amplifier. The voltages at these pins control the peak switch currents. Connect a resistor and capacitor compensation network from these pin to ground.

FB1, FB2 (Pins 6, 11): The LT3486 regulates the voltage at each feedback pin to 200mV. Connect the cathode of the lowest LED in the string and the feedback resistor (R_{FB}) to the respective feedback pin. The LED current in each string can be programmed by:

$I_{LED} \cong 200mV/R_{FB}$, when $V_{CTRL} > 1.8V$

$I_{LED} \cong V_{CTRL}/(5R_{FB})$, when $V_{CTRL} < 1V$

CTRL1, CTRL2 (Pins 7, 10): The CTRL pins are used to provide dimming and shutdown control for the individual switching converters. Connecting these to ground shuts down the respective converter. As the voltages on these pins is ramped from 0V to 1.8V, the LED current in each converter ramps from 0 to $I_{LED} = (200mV/R_{FB})$. Any voltage above 1.8V does not affect the LED current.

PWM1, PWM2 (Pins 8, 9): The PWM control pins can be used to extend the dimming range for the individual switching converter. The LED current in each string can be controlled down to µA levels by feeding a PWM signal to these pins. When the PWM pin voltage is taken below 0.4V, the respective converter is turned off and its V_C pin is disconnected from the internal circuitry. Taking it higher than 0.9V resumes normal operation. Connect these pins to 0.9V supply or higher, if not in use.

$\overline{SHDN}$ (Pin 13): Shutdown Pin for the Device. Connect it to 1.6V or higher to enable device; 0.4V or less to disable device.

REF (Pin 15): The internal bandgap reference (1.25V) is available at this pin. Bypass with a 0.1µF X5R or X7R ceramic capacitor. Draw no more than 50µA from this pin.

Exposed Pad (Pin 17): Ground. The exposed pad of the package provides an electrical contact to ground and good thermal connection to the printed circuit board (PCB). Solder the exposed pad to the PCB system ground.

BLOCK DIAGRAM

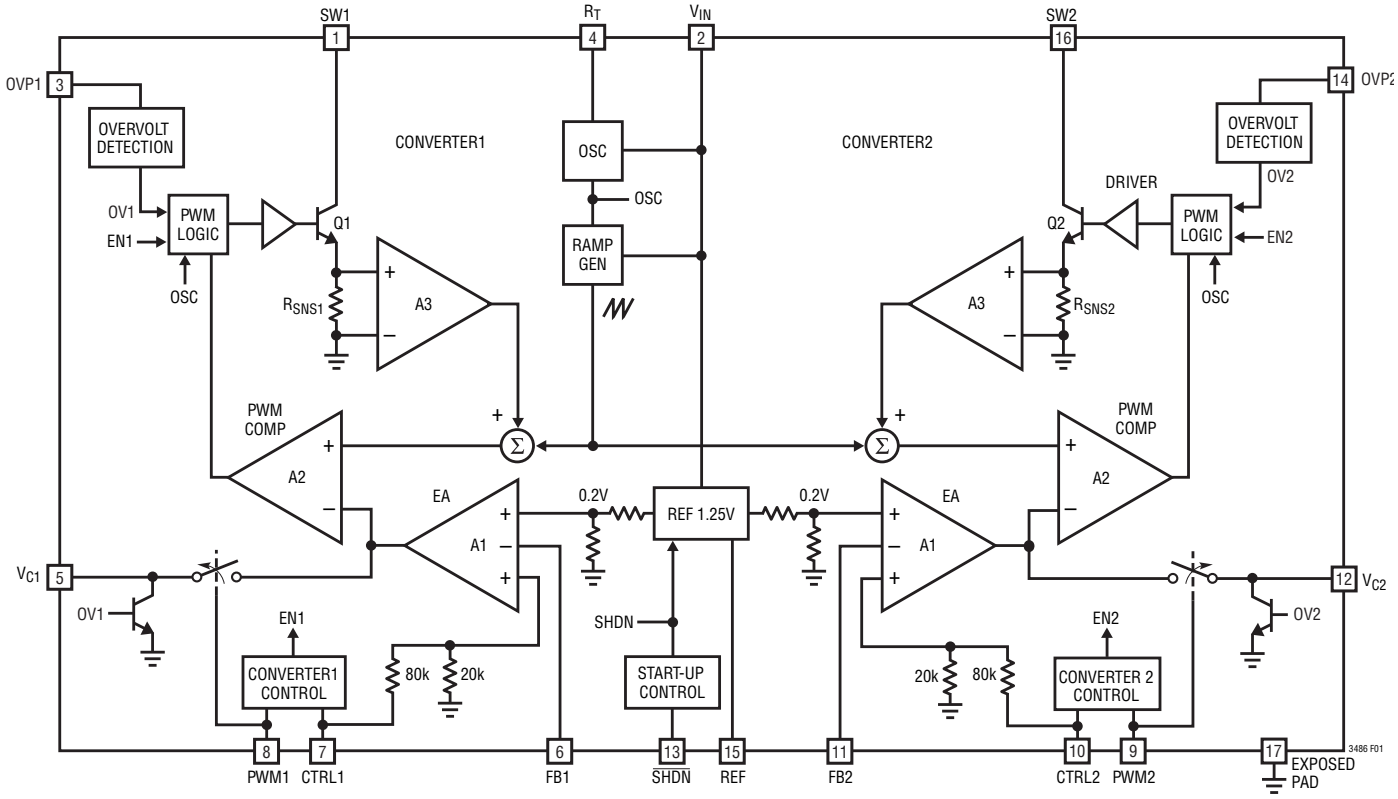

Figure 1. LT3486 Block Diagram

OPERATION

Main Control Loop

The LT3486 uses a constant frequency, current mode control scheme to provide excellent line and load regulation. It incorporates two identical, but fully independent PWM converters. Operation can be best understood by referring to the block diagram in Figure 1. The oscillator, start-up bias and the bandgap reference are shared between the two converters. The control circuitry, power switch, dimming control etc., are all identical for both converters.

At power-up, the output capacitors of both converters are charged up to V_{IN} (input supply voltage) via their respective inductor and the Schottky diode. If the $\overline{SHDN}$ pin is taken above 1.6V, the bandgap reference, start-up bias and the oscillator are turned on. Grounding the $\overline{SHDN}$ pin shuts down the part.

The CTRL1 and CTRL2 pins perform independent dimming and shutdown control for the two converters. Taking the CTRL pins high, enables the respective converters. Connecting these pins to ground, shuts down each converter by pulling their respective V_C pin low.

Working of the main control loop can be understood by following the operation of converter 1. At the start of each oscillator cycle, the power switch Q1 is turned on. A voltage proportional to the switch current is added to a stabilizing ramp and the resulting sum is fed into the positive terminal of the PWM comparator A2. When this voltage exceeds the level at the negative input of A2, the PWM logic turns off the power switch. The level at the negative input of A2 is set by the error amplifier A1, and is simply an amplified version of the difference between the feedback voltage and the 200mV reference voltage. In this manner, the error amplifier A1 regulates the feedback voltage to 200mV reference voltage. The output of the error amplifier A1 sets the correct peak current level in inductor L1 to keep the output in regulation. The CTRL1 pin voltage is used to adjust the reference voltage.

The PWM1, 2 control pins are used to extend the dimming range for the individual converter. The LED current in each string can be controlled down to µA levels by feeding a PWM signal to these pins. Refer to the Applications Information section for more detail.

If only one of the converters is turned on, the other converter will stay off and its output will remain charged up to V_{IN} (input supply voltage).

Minimum Output Current

The LT3486 can drive an 8-LED string at 4mA LED current without pulse skipping. As current is further reduced, the device may begin skipping pulses. This will result in some low frequency ripple, although the LED current remains regulated on an average basis down to zero. The photo in Figure 2 shows circuit operation with 8 white LEDs at 4mA current driven from 3.6V supply. Peak inductor current is less than 200mA and the regulator operates in discontinuous mode implying that the inductor current reached zero during the discharge phase. After the inductor current reaches zero, the switch pin exhibits ringing due to the LC tank circuit formed by the inductor in combination with switch and diode capacitance. This ringing is not harmful; far less spectral energy is contained in the ringing than in the switch transitions. The ringing can be damped by application of a 300Ω resistor across the inductors, although this will degrade efficiency.

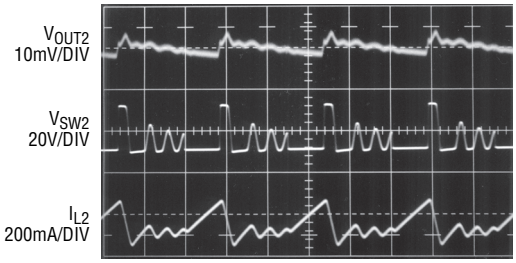

V_{IN} = 3.6V 0.5µs/DIV
I_{LED2} = 4mA (8 LEDs)
CIRCUIT OF FRONT PAGE APPLICATION

Figure 2. Switching Waveforms

Open-Circuit Protection

The LT3486 has internal open-circuit protection for both the converters. Connect the overvoltage protection pins (OVP1, OVP2) to the output of the respective converter. When the LEDs are disconnected from the circuit or fail open, the on-chip voltage detectors monitor the voltages at the OVP1 and OVP2 pins and limits these voltages to 36V (typ) by turning off the respective switcher. The converter will then switch at a very low frequency to minimize the input current. Output voltage and input current during

OPERATION

output open circuit are shown in the Typical Performance Characteristics graphs.

Figure 3a shows the transient response of switcher 1 with the LEDs disconnected from the output. When the LED1 string is disconnected from the output, the voltage at the feedback pin (FB1) drops to 0V. As a result, the error amplifier charges up the V_C node to the clamp voltage level of 1.5V (typ). The converter starts switching at peak current limit and ramps up the output voltage. When the output voltage reaches the OVP clamp voltage level of 36V (typ), the LT3486 shuts off the converter by pulling the V_C node to ground. The converter then regulates the output voltage at 36V (typ) by switching at a very low frequency.

In the event one of the converters has an output open-circuit, its output voltage will be clamped at 36V (typ). However, the other converter will continue functioning properly. The photo in Figure 3b shows circuit operation with converter 1 output open-circuit and converter 2 driving eight LEDs at 25mA. Converter 1 starts switching at a very low frequency, reducing its input current.

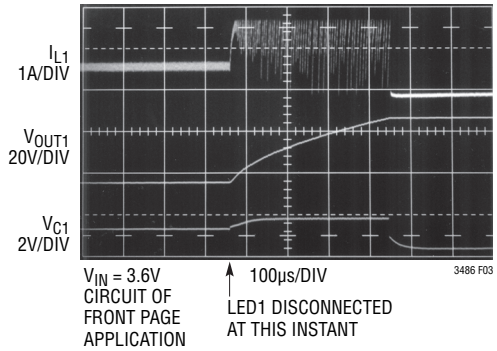

Figure 3a. Transient Response of Switcher 1 with LED1 Disconnected from the Output

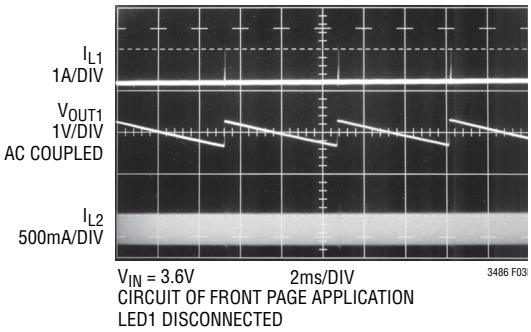

Figure 3b. Switching Waveforms with Output 1 Open Circuit

Soft-Start

The LT3486 has a separate internal soft-start circuitry for each converter. Soft-start helps to limit the inrush current during start-up. Soft-start is achieved by clamping the output of the error amplifier during the soft-start period. This limits the peak inductor current and ramps up the output voltage in a controlled manner.

The converter enters into soft-start mode whenever the respective CTRL pin is pulled from low to high. Figure 4 shows the start-up waveforms with converter 2 driving eight LEDs at 25mA. The filtered input current, as shown in Figure 4, is well controlled. The soft-start circuit is more effective when driving a smaller number of LEDs.

Undervoltage Lockout

The LT3486 has an undervoltage lockout circuit which shuts down both the converters when the input voltage drops below 2.1V (typ). This prevents the converter to operate in an erratic mode when powered from low supply voltages.

Overtemperature Protection

The maximum allowable junction temperature for LT3486 is 125°C. In normal operation, the IC's junction temperature should be kept below 125°C at an ambient temperature of 85°C or less. If the junction temperature exceeds 150°C, the internal thermal shutdown circuitry kicks in and turns off both the converters. The converters will remain off until the die temperature falls below 150°C.

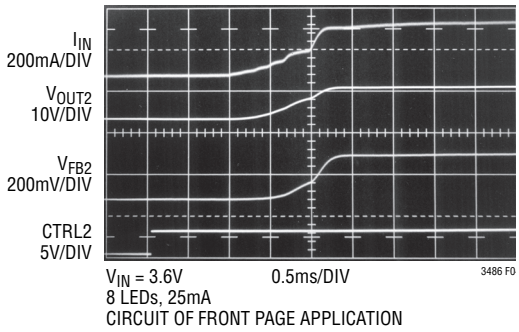

Figure 4. Start-Up Waveforms

APPLICATIONS INFORMATION

Duty Cycle

The duty cycle for a step-up converter is given by:

$$D = \frac{V_{OUT} + V_D - V_{IN}}{V_{OUT} + V_D - V_{CESAT}}$$

where:

V_{OUT} = Output voltage

V_D = Schottky forward voltage drop

V_{CESAT} = Saturation voltage of the switch

V_{IN} = Input battery voltage

The maximum duty cycle achievable for LT3486 is 96% (typ) when running at 1MHz switching frequency. It increases to 98% (typ) when run at 200kHz and drops to 90% (typ) at 2MHz. Always ensure that the converter is not duty-cycle limited when powering the LEDs at a given switching frequency.

Setting the Switching Frequency

The LT3486 uses a constant frequency architecture that can be programmed over a 200kHz to 2.5MHz range with a single external timing resistor from the R_T pin to ground. The nominal voltage on the R_T pin is 0.54V, and the current that flows into the timing resistor is used to charge and discharge an internal oscillator capacitor. A graph for selecting the value of R_T for a given operating frequency is shown in the Figure 5.

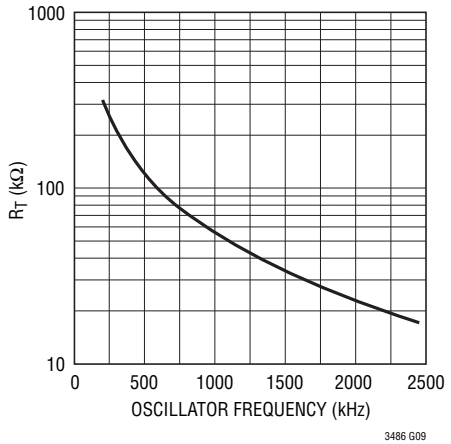

Figure 5. Timing Resistor (R_T) Value

Operating Frequency Selection

The choice of operating frequency is determined by several factors. There is a trade-off between efficiency and component size. Higher switching frequency allows the use of smaller inductors albeit at the cost of increased switching losses and decreased efficiency.

Another consideration is the maximum duty cycle achievable. In certain applications the converter needs to operate at the maximum duty cycle in order to light up the maximum number of LEDs. The LT3486 has a fixed oscillator off-time and a variable on-time. As a result, the maximum duty cycle increases as the switching frequency is decreased.

The circuit of Figure 6a is operated with different values of timing resistor (R_T). R_T is chosen so as to run the converters at 800kHz (R_T = 63.4k), 1.25MHz (R_T = 39.1k) and 2MHz (R_T = 21.5k). The CTRL pins are used to provide dimming for the respective LED strings. The efficiency comparison for different R_T values is shown in Figure 6b.

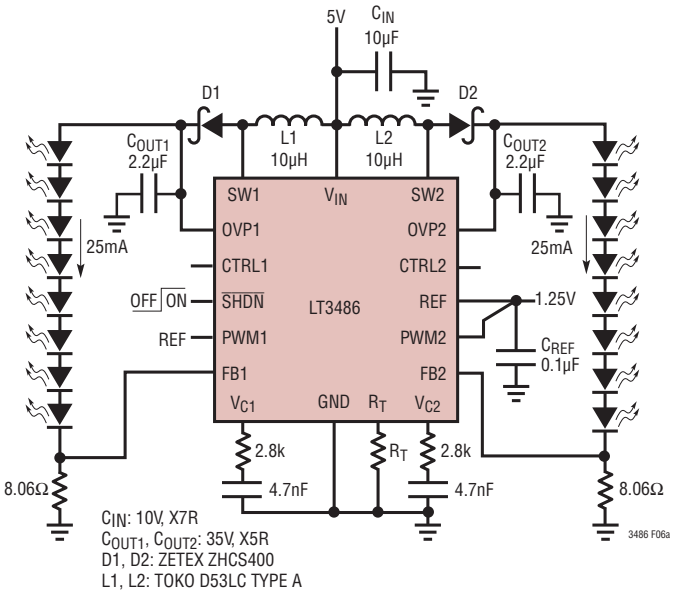

Figure 6a. 5V to 8/8 White LEDs

APPLICATIONS INFORMATION

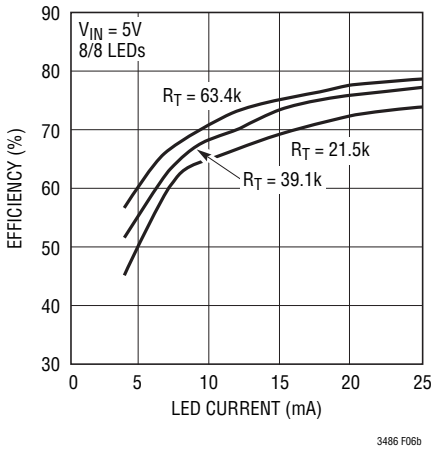

Figure 6b. Efficiency Comparison for Different R_T Resistors

Inductor Selection

The choice of the inductor will depend on the selection of switching frequency of LT3486. The switching frequency can be programmed from 200kHz to 2.5MHz. Higher switching frequency allows the use of smaller inductors albeit at the cost of increased switching losses.

The inductor current ripple (ΔI_L), neglecting the drop across the Schottky diode and the switch, is given by:

$$\Delta I_L = \frac{V_{IN(MIN)} \bullet \left(V_{OUT(MAX)} - V_{IN(MIN)}\right)}{V_{OUT(MAX)} \bullet f \bullet L}$$

where:

L = Inductor

f = Operating frequency

$V_{IN(MIN)}$ = Minimum input voltage

$V_{OUT(MAX)}$ = Maximum output voltage

The ΔI_L is typically set to 20% to 40% of the maximum inductor current.

The inductor should have a saturation current rating greater than the peak inductor current required for the application. Also, ensure that the inductor has a low DCR (copper wire resistance) to minimize I^2R power losses. Recommended inductor values range from 4.7µH to 22µH.

Several inductors that work well with the LT3486 are listed in Table 1. Consult each manufacturer for more detailed information and for their entire selection of related parts.

Table 1. Recommended Inductors

PART	L (µH)	MAX DCR (Ω)	CURRENT RATING (A)	VENDOR
LQH55DN150M LQH55DN220M	15 22	0.150 0.190	1.40 1.20	Murata (814) 237-1431 www.murata.com
A915AY-4R7M A915AY-6R8M A915AY-100M A918CY-100M A918CY-150M	4.7 6.8 10 10 15	0.045 0.068 0.090 0.098 0.149	2.49 2.01 1.77 1.22 0.94	Toko (847) 297-0070 www.toko.com
CDRH4D28-100 CDRH5D18-150	10 15	0.048 0.145	1.30 0.97	Sumida (847) 956-0666 www.sumida.com

Capacitor Selection

The small size of ceramic capacitors make them ideal for LT3486 applications. Use only X5R and X7R types because they retain their capacitance over wider voltage and temperature ranges than other types such as Y5V or Z5U. A 4.7µF or larger input capacitor is sufficient for most applications. Always use a capacitor with sufficient voltage rating.

Table 2 shows a list of several ceramic capacitor manufacturers. Consult the manufacturers for detailed information on their entire selection of ceramic parts.

Table 2. Ceramic Capacitor Manufacturers

Taiyo Yuden	(408) 573-4150 www.t-yuden.com
AVX	(803) 448-9411 www.avxcorp.com
Murata	(714) 852-2001 www.murata.com

Diode Selection

Schottky diodes with their low forward voltage drop and fast reverse recovery, are the ideal choices for LT3486 applications. The diode conducts current only during the switch off time. The peak reverse voltage that the diode must withstand is equal to the regulator output voltage.

APPLICATIONS INFORMATION

The average forward current in normal operation is equal to the output current, and the peak current is equal to the peak inductor current. A Schottky diode rated at 1A is sufficient for most LT3486 applications. Some recommended Schottky diodes are listed in Table 3.

Table 3. Recommended Schottky Diodes

PART NUMBER	V_R (V)	I_{AVG} (A)	MANUFACTURER
MBR0530 MBRM120E	30 20	0.5 1	On Semiconductor www.onsemi.com
ZLLS400 ZLLS1000 ZHCS400 ZHCS1000	40 40 40 40	0.4 1 0.4 1	Zetex www.zetex.com

When the LT3486 is set up for PWM dimming operation, choose a Schottky diode with low reverse leakage current. During PWM dimming operation, the output capacitor is required to hold up the charge in the PWM "off" period. A low reverse leakage Schottky helps in that mode of operation. The Zetex ZLLS400 and ZLLS1000 are available in a small surface mount package and are a good fit for this application.

MOSFET Selection

The power MOSFET used in LT3486 applications with wide dimming range requirements should be chosen based on the maximum drain-source voltage. The maximum drain current $I_{D(MAX)}$ and gate-to-source voltages should also be considered when choosing the FET.

Choose a MOSFET with maximum V_{DS} (drain source) voltage greater than the output clamp voltage i.e., 36V (typ). Fairchild Semiconductor's FDN5630 (60V, 1.7A N-channel FET) is a good fit for most LT3486 applications. For dimming low current LEDs (~25mA), Fairchild 2N7002 is a good alternative.

Programming LED Current

The current in each LED string can be set independently by the choice of resistors R_{FB1} and R_{FB2} respectively (see front page application). The feedback reference is 200mV. In order to have accurate LED current, precision resistors are preferred (1% is recommended).

$$R_{FB1} = \frac{200mV}{I_{LED1}}$$

$$R_{FB2} = \frac{200mV}{I_{LED2}}$$

Table 4. R_{FB} Value Selection

I_{LED} (mA)	R_{FB} (Ω)
5	40.2
10	20.0
15	13.3
20	10.0
25	8.06

Most low power white LEDs are driven at maximum currents of 15mA to 25mA. The LT3486 can be used to power high power LEDs as well. Refer to the Typical Applications for more detail.

Dimming Control

The dimming of the two LED strings can be controlled independently by modulating the respective CTRL and PWM pins. There are two ways to control the intensity of the LEDs.

Adjusting the LED Current Value

Controlling the current flowing through the LEDs controls the intensity of the LEDs.This is the easiest way to control the intensity of the LEDs. The LED forward current can be controlled by modulating the DC voltage at the respective CRTL pin. The PWM pins are not in use when appying this scheme. They must be connected to a 0.9V supply or higher. The DC voltage at the CTRL pin can be modulated in two ways.

(a) Using a DC Voltage Source

For some applications, the preferred method of brightness control is a variable DC voltage fed to the CTRL pins. The CTRL1, CTRL2 pin voltage can be modulated to set the dimming of the respective LED string. As the voltage on the CTRL1, CTRL2 pin increases from 0V to 1.8V, the LED current increases from 0 to I_{LED}. As the CTRL1, CTRL2 pin voltage increases beyond 1.8V, it has no effect on the LED current.

APPLICATIONS INFORMATION

The LED current can be set by:

$I_{LED} \approx (200mV/R_{FB})$, when $V_{CTRL} > 1.8V$

$I_{LED} \approx (V_{CTRL}/5 \bullet R_{FB})$, when $V_{CTRL} < 1V$

Feedback voltage variation versus control voltage is given in the Typical Performance Characteristics graphs.

(b) Using a Filtered PWM Signal

A variable duty cycle PWM can be used to control the brightness of the LED string. The PWM signal is filtered (Figure 7) by an RC network and fed to the CTRL1, CTRL2 pins.

The corner frequency of R1, C1 should be much lower than the frequency of the PWM signal. R1 needs to be much smaller than the internal impedance in the CTRL pins, which is 100kΩ.

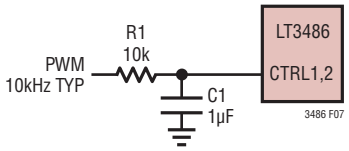

Figure 7. Dimming Control Using a Filtered PWM Signal

Pulse-Width Modulation (PWM)

Adjusting the forward current flowing in the LEDs changes the intensity of the LEDs, as explained in the previous section. However, a change in forward current also changes the color of the LEDs. The chromaticity of the LEDs changes with the change in forward current. Many applications cannot tolerate any shift in the color of the LEDs. Controlling the intensity of the LEDs via applying a PWM signal allows dimming of the LEDs without changing the color.

Dimming the LEDs via a PWM signal essentially involves turning the LEDs on and off at the PWM frequency. The human eye has a limit of 60 frames per second. By increasing the PWM frequency to say, 80Hz, the eye can be deceived into believing that the pulsed light source is continously on. Additionally by modulating the duty cycle (amount of "on-time"), the intensity of the LEDs can be controlled. The color of the LEDs remains unchanged in this scheme since the LED current value is either zero or a constant value.

Figure 8(a) shows a 12V to 8/8 white LED driver. The PWM dimming control method requires an external NMOS tied to the cathode of the lowest LED in the string, as shown in

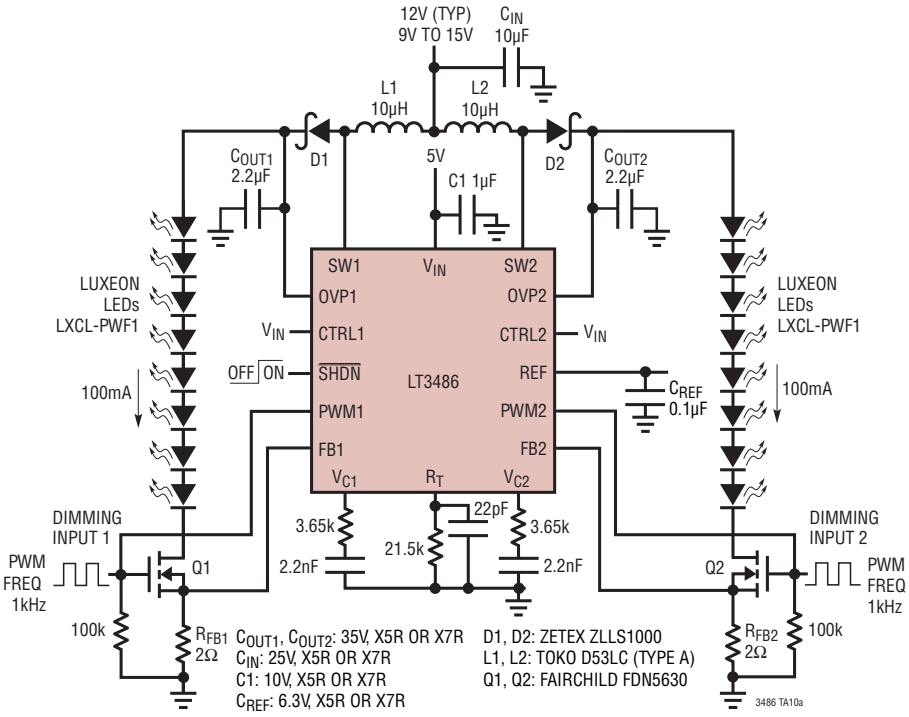

Figure 8a. 12V to 8/8 White LEDs

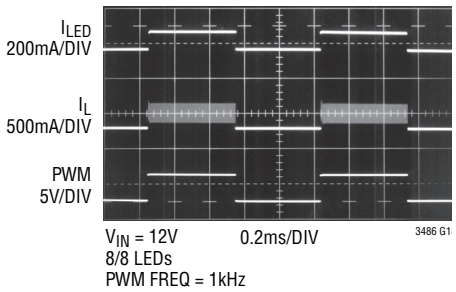

Figure 8b. PWM Dimming Waveforms

APPLICATIONS INFORMATION

the figure. A PWM logic input is applied to the gate of the NMOS and the PWM pin of the LT3486. When the PWM input is taken high, the LEDs are connected to the R_{FB} resistor and a current I_{LED} = 200mV/R_{FB} flows through the LEDs. When the PWM input is taken low, the LEDs are disconnected and turn off. The low PWM input applied to the LT3486 ensures that the respective converter turns off and its V_C pin goes high impedance. This ensures that the capacitor connected to the V_C pin retains its voltage which in turn allows the LEDs to turn on faster, as shown in Figure 8(b). The CTRL pin is not used to modulate the LED current in the scheme. It can be connected to a supply voltage greater than 1.8V.

The dimming control pins (PWM1, PWM2) can be used to extend the dimming range for the individual switching converters. The LED current can be controlled down to µA levels by feeding a PWM signal with frequencies in the range of 80Hz to 50kHz. The LED current can be controlled by PWM frequencies above 50kHz but the controllable current decreases with increasing frequency. Pulling the PWM pins below 0.4V disables the respective switcher. Taking it higher than 0.9V resumes normal operation. Connect these pins to 0.9V or higher if not in use.

Figure 9 shows the LED current variation vs PWM duty cycle. The LED current is controlled by applying a PWM of frequency 100Hz, 1kHz and 25kHz to the circuit of Figure 8a. As seen in the curves, the LED string is able to get a wide (1000:1) dimming range with PWM frequency of 100Hz. The dimming range decreases as PWM frequency goes up.

Board Layout Consideration

As with all switching regulators, careful attention must be paid to the PCB board layout and component placement. To prevent electromagnetic interference (EMI) problems, proper layout of high frequency switching paths is essential. Minimize the length and area of all traces connected to the switching node pins (SW1 and SW2). Keep the feedback pins (FB1 and FB2) away from the switching nodes.

The DFN and FE packages both have an exposed paddle that must be connected to the system ground. The ground connection for the feedback resistors should be tied directly to the ground plane and not shared with any other component, except the R_T resistor, ensuring a clean, noise-free connection. Recommended component placement for the DFN package is shown in the Figure 10.

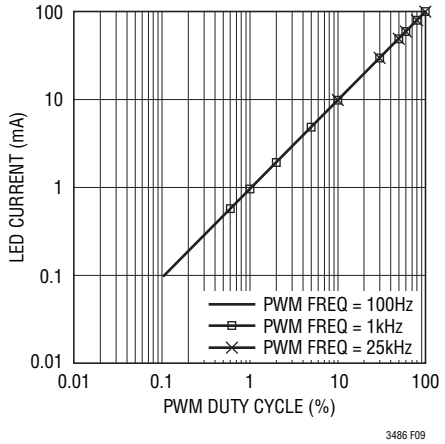

Figure 9. LED Current Variation vs PWM Duty Cycle

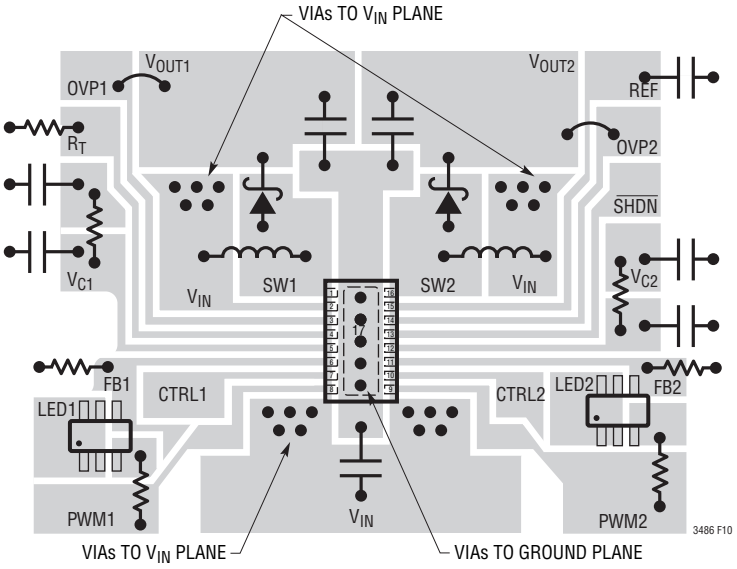

Figure 10. Recommended Layout for LT3486

TYPICAL APPLICATIONS

Li-Ion Cell Powered Driver for Camera Flash and LCD Backlighting

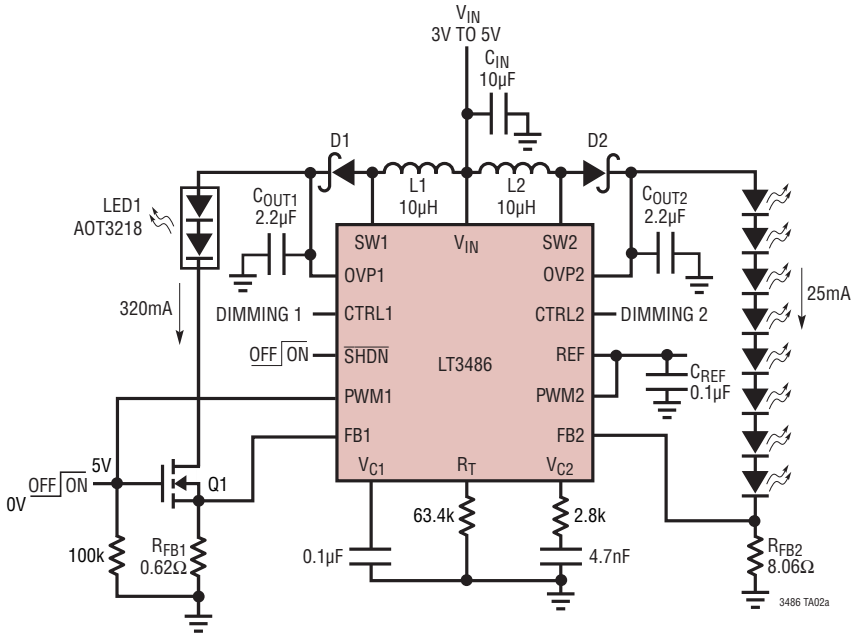

C_{IN}: 6.3V, X5R OR X7R DIELECTRIC
C_{OUT1}, C_{OUT2}: 35V, X5R OR X7R
D1: ZETEX ZHCS1000
D2: ZETEX ZHCS400

L1, L2: TOKO D53LC (TYPE A)
Q1: FAIRCHILD FDN5630

Efficiency vs V_{IN}

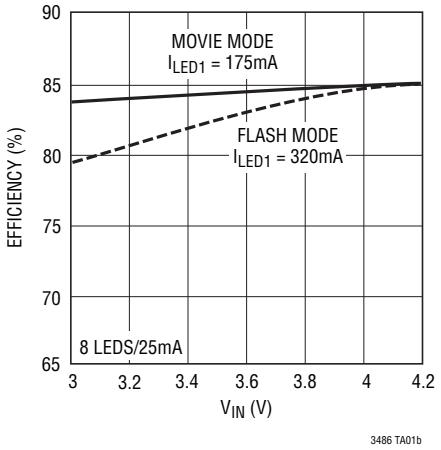

TYPICAL APPLICATIONS

1 Li-Ion Cell to 8/8 White LEDs

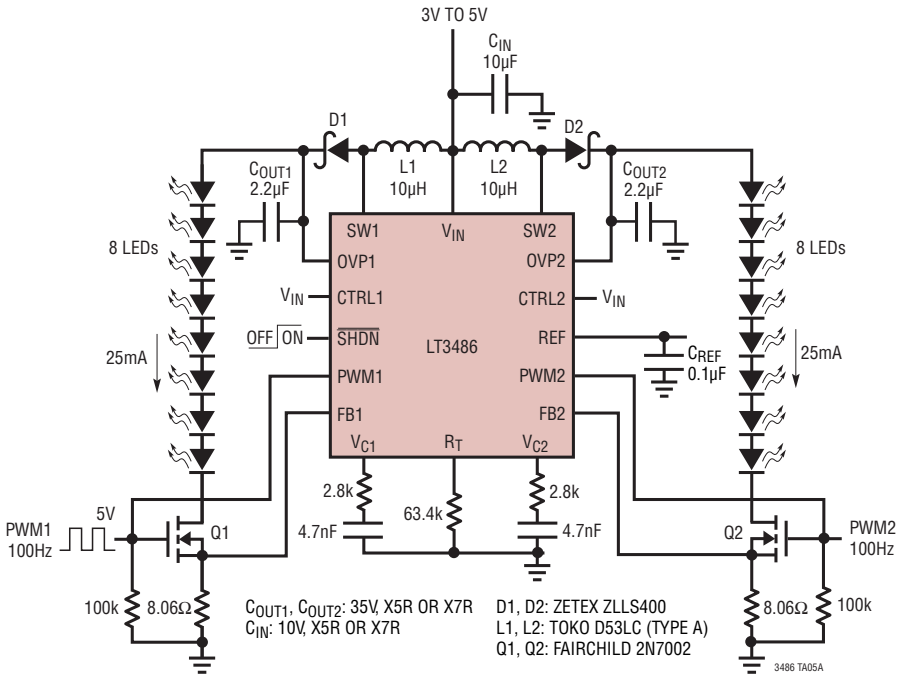

LED Current and Efficiency vs PWM Duty Cycle

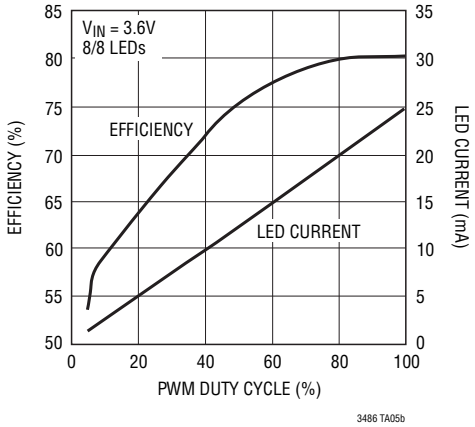

Wide (250:1) Dimming Range (LED Current 0.1mA to 25mA)

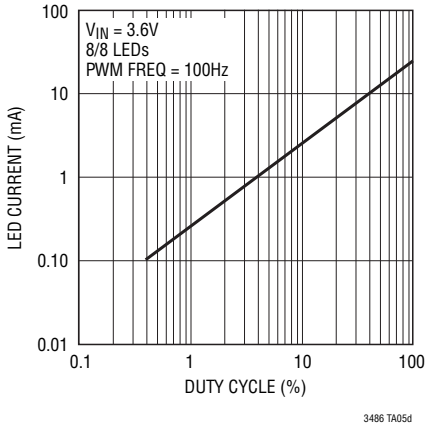

PWM Dimming Waveforms

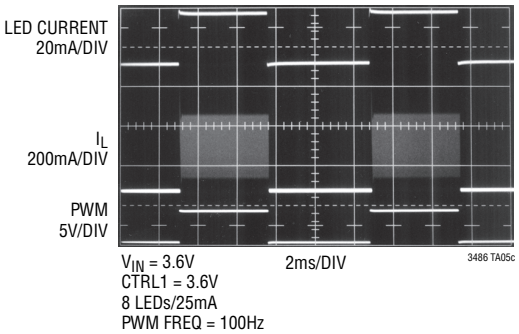

TYPICAL APPLICATIONS

5V to 16/16 White LEDs

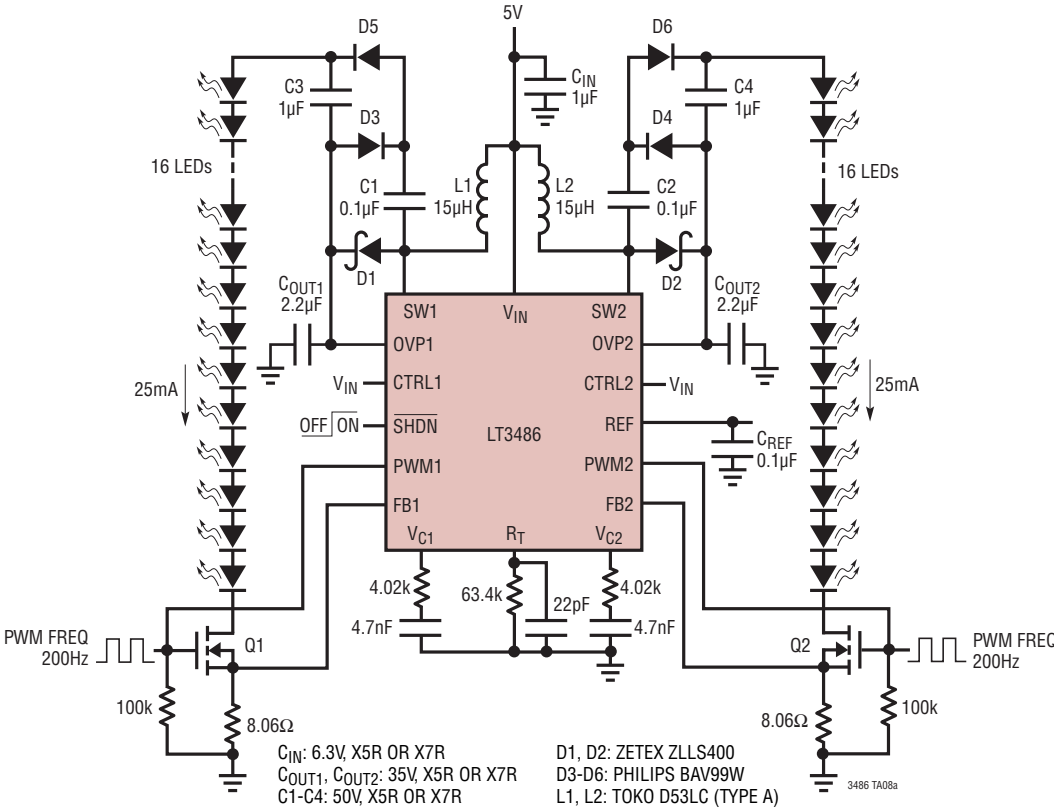

LED Current and Efficiency vs PWM Duty Cycle

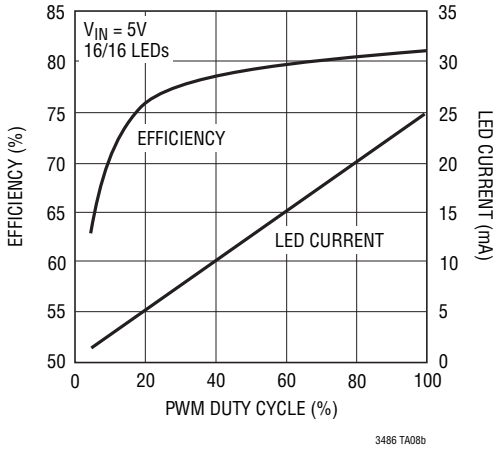

PWM Dimming Waveforms

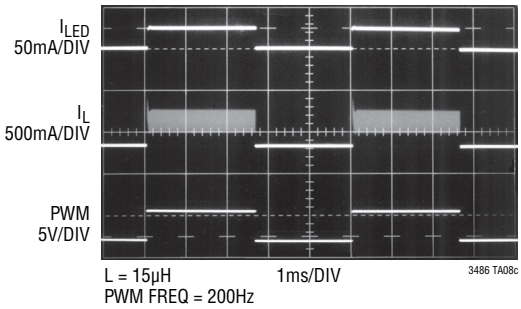

PACKAGE DESCRIPTION

DHC Package
16-Lead Plastic DFN (5mm × 3mm)
(Reference LTC DWG # 05-08-1706)

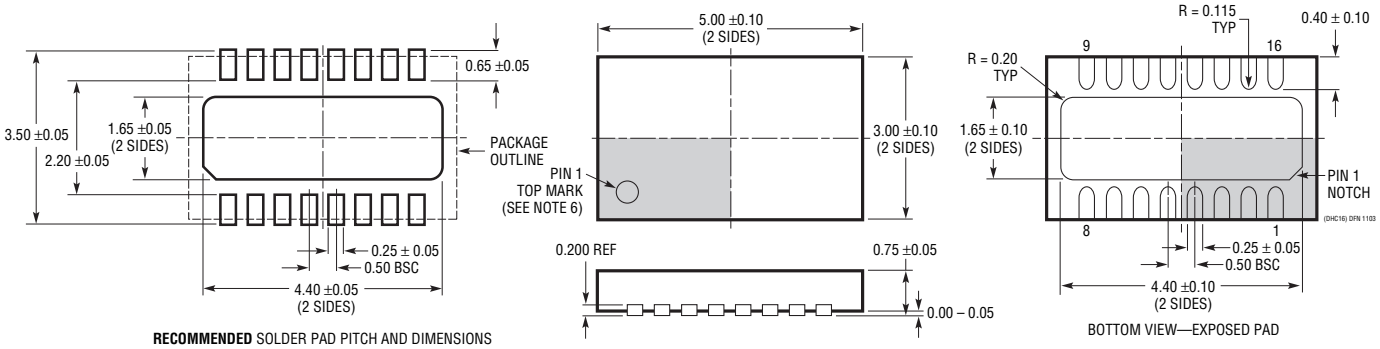

RECOMMENDED SOLDER PAD PITCH AND DIMENSIONS

NOTE:
1. DRAWING PROPOSED TO BE MADE VARIATION OF VERSION (WJED-1) IN JEDEC PACKAGE OUTLINE MO-229
2. DRAWING NOT TO SCALE
3. ALL DIMENSIONS ARE IN MILLIMETERS
4. DIMENSIONS OF EXPOSED PAD ON BOTTOM OF PACKAGE DO NOT INCLUDE MOLD FLASH. MOLD FLASH, IF PRESENT, SHALL NOT EXCEED 0.15mm ON ANY SIDE
5. EXPOSED PAD SHALL BE SOLDER PLATED
6. SHADED AREA IS ONLY A REFERENCE FOR PIN 1 LOCATION ON THE TOP AND BOTTOM OF PACKAGE

FE Package
16-Lead Plastic TSSOP (4.4mm)
(Reference LTC DWG # 05-08-1663 Rev I)

Exposed Pad Variation BC

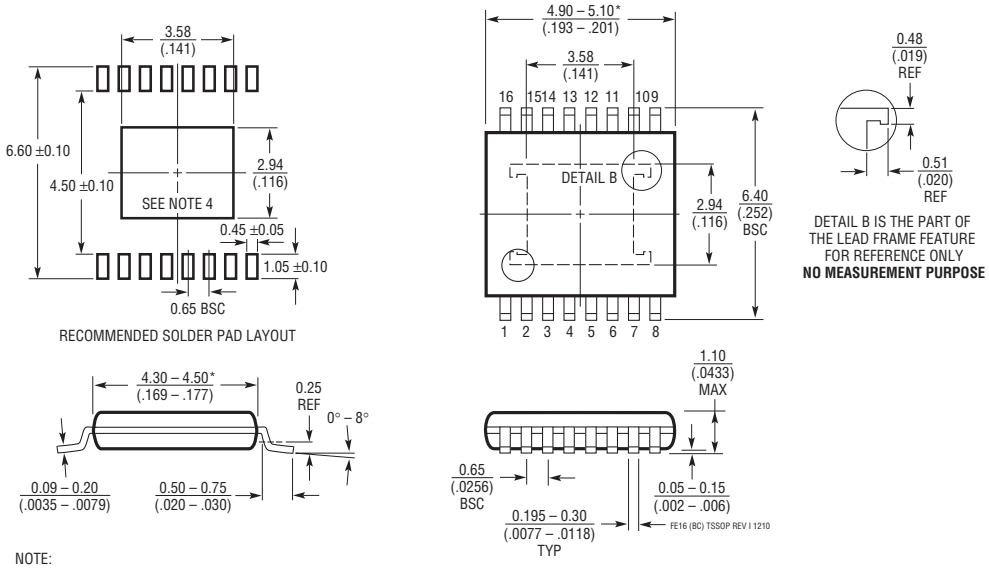

NOTE:
1. CONTROLLING DIMENSION: MILLIMETERS
2. DIMENSIONS ARE IN $\frac{\text{MILLIMETERS}}{\text{(INCHES)}}$
3. DRAWING NOT TO SCALE
4. RECOMMENDED MINIMUM PCB METAL SIZE FOR EXPOSED PAD ATTACHMENT

*DIMENSIONS DO NOT INCLUDE MOLD FLASH. MOLD FLASH SHALL NOT EXCEED 0.150mm (.006") PER SIDE

REVISION HISTORY (Revision history begins at Rev D)

REV	DATE	DESCRIPTION	PAGE NUMBER
D	03/10	Corrected the Part Number in Description Section and Order Information	1, 2
		Updated Typical Value for Switching Frequency Parameter in Electrical Characteristics	3
E	01/11	Updated FE package drawing	18

Information furnished by Linear Technology Corporation is believed to be accurate and reliable. However, no responsibility is assumed for its use. Linear Technology Corporation makes no representation that the interconnection of its circuits as described herein will not infringe on existing patent rights.

TYPICAL APPLICATION

12V to 8/8 White LEDs

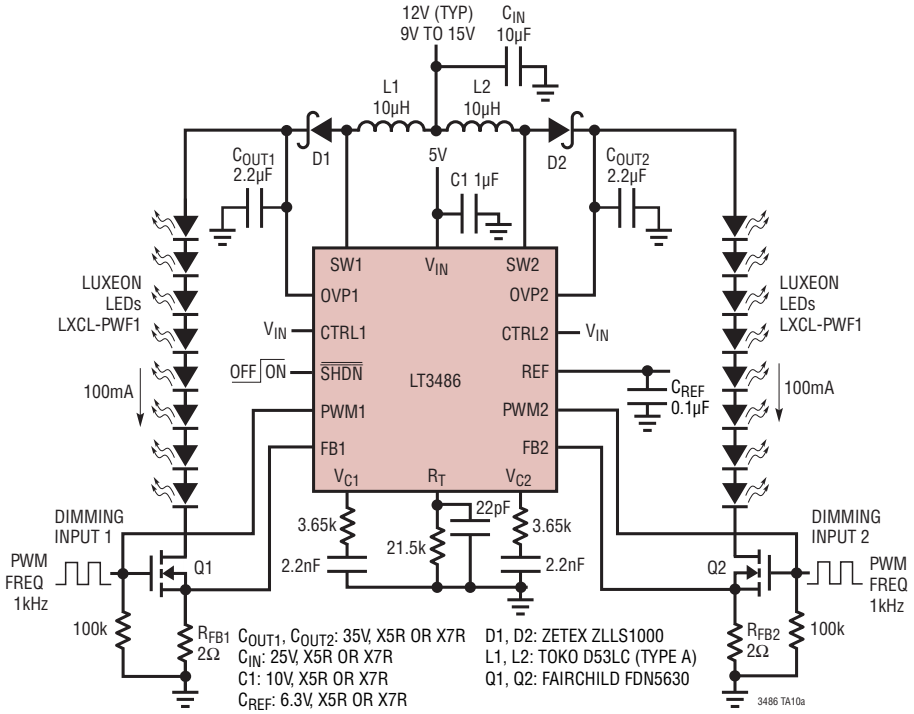

LED Current and Efficiency vs PWM Duty Cycle

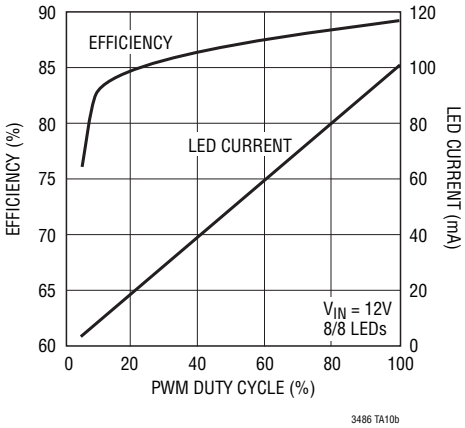

RELATED PARTS

PART NUMBER	DESCRIPTION	COMMENTS
LT1618	Constant Current, Constant Voltage 1.24MHz, High Efficiency Boost Regulator	Up to 16 White LEDs, V_{IN}: 1.6V to 18V, $V_{OUT(MAX)}$ = 34V, I_Q = 1.8mA, I_{SD} < 1µA, MS Package
LT1932	Constant Current, 1.2MHz, High Efficiency White LED Boost Regulator	Up to 8 White LEDs, V_{IN}: 1V to 10V, $V_{OUT(MAX)}$ = 34V, I_Q = 1.2mA, I_{SD} < 1µA, ThinSOT™ Package
LT1937	Constant Current, 1.2MHz, High Efficiency White LED Boost Regulator	Up to 4 White LEDs, V_{IN}: 2.5V to 10V, $V_{OUT(MAX)}$ = 34V, I_Q = 1.9mA, I_{SD} < 1µA, ThinSOT, SC70 Packages
LTC3200	Low Noise, 2MHz, Regulated Charge Pump White LED Driver MS Package	Up to 6 White LEDs, V_{IN}: 2.7V to 4.5V, I_Q = 8mA, I_{SD} < 1µA,
LTC3200-5	Low Noise, 2MHz, Regulated Charge Pump White LED Driver ThinSOT Package	Up to 6 White LEDs, V_{IN}: 2.7V to 4.5V, I_Q = 8mA, I_{SD} < 1µA,
LTC3201	Low Noise, 1.7MHz, Regulated Charge Pump White LED Driver MS Package	Up to 6 White LEDs, V_{IN}: 2.7V to 4.5V, I_Q = 6.5mA, I_{SD} < 1µA,
LTC3202	Low Noise, 1.5MHz, Regulated Charge Pump White LED Driver MS Package	Up to 8 White LEDs, V_{IN}: 2.7V to 4.5V, I_Q = 5mA, I_{SD} < 1µA,
LTC3205	High Efficiency, Multidisplay LED Controller	Up to 4 (Main), 2 (Sub) and RGB, V_{IN}: 2.8V to 4.5V, I_Q = 50µA, I_{SD} < 1µA, QFN-24 Package
LT3465/LT3465A	Constant Current, 1.2MHz/2.7MHz, High Efficiency White LED Boost Regulator with Integrated Schottky Diode	Up to Six White LEDs, V_{IN}: 2.7V to 16V, $V_{OUT(MAX)}$ = 34V, I_Q = 1.9mA, I_{SD} < 1µA, ThinSOT Package
LT3466	Dual Full Function White LED Boost Regulator with Integrated Schottky Diode	Drives Up to 20 LEDs, V_{IN}: 2.7V to 24V, $V_{OUT(MAX)}$ = 40V, I_Q = 5mA, I_{SD} < 16µA, DFN Package

Linear Technology Corporation
1630 McCarthy Blvd., Milpitas, CA 95035-7417
(408) 432-1900 • FAX: (408) 434-0507 • www.linear.com

LT 0111 REV E • PRINTED IN USA

© LINEAR TECHNOLOGY CORPORATION 2008