SLLS065F – AUGUST 1989 – REVISED JANUARY 2000

- **Meets or Exceeds the Requirements of TIA/EIA-232-F and ITU Recommendation V.28**
- **Single Chip With Easy Interface Between UART and Serial-Port Connector**
- **Less Than 9-mW Power Consumption**
- **Wide Driver Supply Voltage . . . 4.5 V to 13.2 V**
- **Driver Output Slew Rate Limited to 30 V/µs Max**
- **Receiver Input Hysteresis . . . 1100 mV Typ**
- **Push-Pull Receiver Outputs**
- **On-Chip Receiver 1-µs Noise Filter**
- **Functionally Interchangeable With Texas Instruments SN75185**
- **Operates Up to 120 kbit/s Over a 3-Meter Cable (See *Application Information* for Conditions)**

DW OR N PACKAGE
(TOP VIEW)

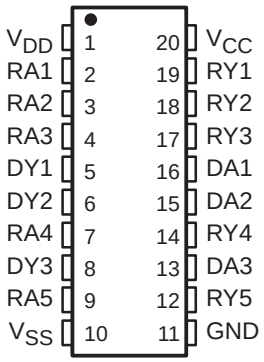

description

The SN75C185 is a low-power BiMOS device containing three independent drivers and five receivers that are used to interface data terminal equipment (DTE) with data circuit-terminating equipment (DCE). Typically, the SN75C185 replaces one SN75188 and two SN75189 devices. This device conforms to TIA/EIA-232-F. The drivers and receivers of the SN75C185 are similar to those of the SN75C188 and SN75C189A, respectively. The drivers have a controlled output slew rate that is limited to a maximum of 30 V/µs, and the receivers have filters that reject input noise pulses that are shorter than 1 µs. Both these features eliminate the need for external components.

The SN75C185 uses the low-power BiMOS technology. In most applications, the receivers contained in this device interface to single inputs of peripheral devices such as ACEs, UARTS, or microprocessors. By using sampling, such peripheral devices usually are insensitive to the transition times of the input signals. If this is not the case, or for other uses, it is recommended that the SN75C185 receiver outputs be buffered by single Schmitt input gates or single gates of the HCMOS, ALS, or 74F logic families.

The SN75C185 is characterized for operation from 0°C to 70°C.

Please be aware that an important notice concerning availability, standard warranty, and use in critical applications of Texas Instruments semiconductor products and disclaimers thereto appears at the end of this data sheet.

PRODUCTION DATA information is current as of publication date. Products conform to specifications per the terms of Texas Instruments standard warranty. Production processing does not necessarily include testing of all parameters.

Copyright © 2000, Texas Instruments Incorporated

logic symbol†

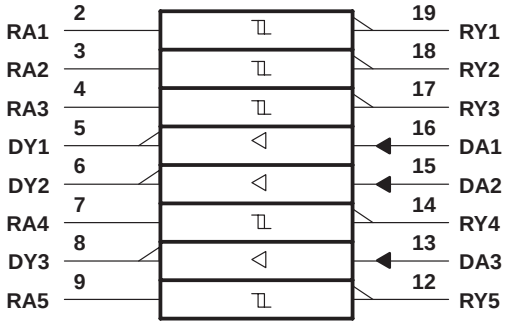

† This symbol is in accordance with ANSI/IEEE Std 91-1984 and IEC Publication 617-12.

logic diagram (positive logic)

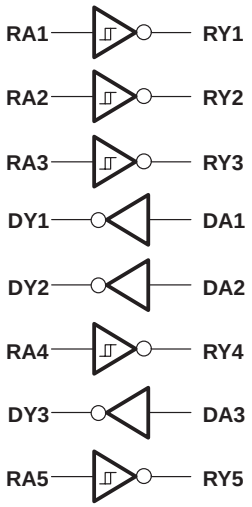

equivalent schematics of inputs and outputs

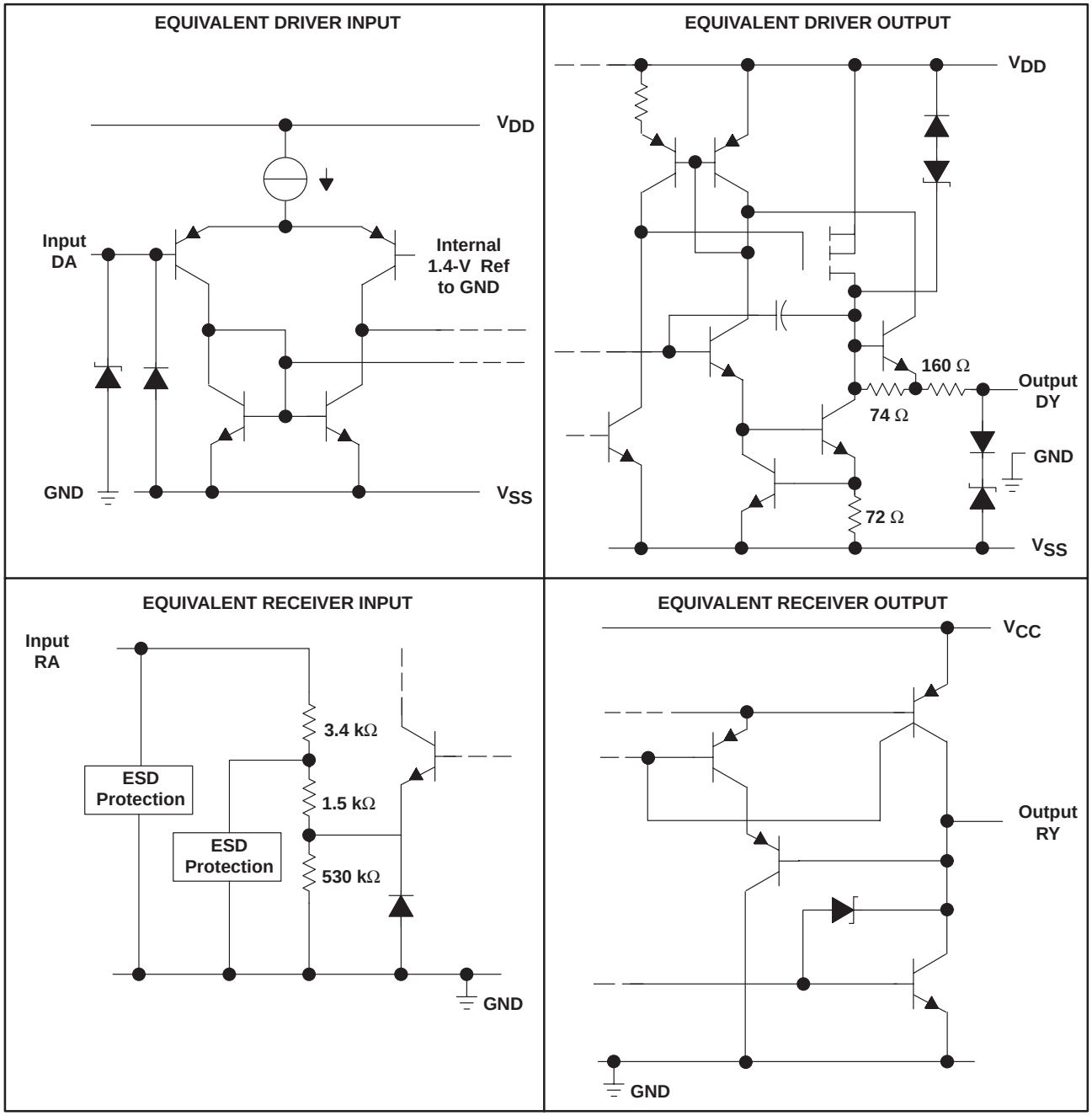

All resistor values are nominal.

absolute maximum ratings over operating free-air temperature range (unless otherwise noted)†

Supply voltage, V_{DD} (see Note 1) . . . . . 13.5 V
Supply voltage, V_{SS} . . . . . –13.5 V
Supply voltage, V_{CC} . . . . . 7 V
Input voltage range, V_I: Driver . . . . . V_{SS} to V_{DD}
Receiver . . . . . –30 V to 30 V
Output voltage range, V_O: Driver . . . . . V_{SS} – 6 V to V_{DD} + 6 V
Receiver . . . . . –0.3 V to V_{CC} + 0.3 V
Package thermal impedance, θ_{JA} (see Note 2): DW package . . . . . 58°C/W
N package . . . . . 69°C/W
Operating free-air temperature range, T_A . . . . . 0°C to 70°C
Lead temperature 1,6 mm (1/16 inch) from case for 10 seconds . . . . . 260°C
Storage temperature range, T_{stg} . . . . . –65°C to 150°C

† Stresses beyond those listed under "absolute maximum ratings" may cause permanent damage to the device. These are stress ratings only, and functional operation of the device at these or any other conditions beyond those indicated under "recommended operating conditions" is not implied. Exposure to absolute-maximum-rated conditions for extended periods may affect device reliability.

NOTES: 1. All voltages are with respect to network GND.
2. The package thermal impedance is calculated in accordance with JESD 51.

recommended operating conditions

			MIN	NOM	MAX	UNIT
	Supply voltage	V_{DD}	4.5	12	13.2	V
		V_{SS}	–4.5	–12	–13.2	V
		V_{CC}	4.5	5	6	V
V_I	Input voltage (see Note 3)	Drivers	V_{SS}+2		V_{DD}	V
		Receivers	–25		25	
V_{IH}	High-level input voltage	Drivers	2			V
V_{IL}	Low-level input voltage				0.8	V
I_{OH}	High-level output current	Receivers			–1	mA
I_{OL}	High-level output current				3.2	mA
T_A	Operating free-air temperature		0		70	°C

NOTE 3: The algebraic convention, where the more positive (less negative) limit is designated as maximum, is used in this data sheet for logic levels only, e.g., if –10 V is a maximum, the typical value is a more negative voltage.

supply currents

PARAMETER		TEST CONDITIONS			MIN	TYP	MAX	UNIT
I_{DD}	Supply current from V_{DD}	No load, All inputs at 2 V or 0.8 V	V_{DD} = 5 V,	V_{SS} = –5 V		115	200	µA
			V_{DD} = 12 V,	V_{SS} = –12 V		115	200	
I_{SS}	Supply current from V_{SS}	No load, All inputs at 2 V or 0.8 V	V_{DD} = 5 V,	V_{SS} = –5 V		–115	–200	µA
			V_{DD} = 12 V,	V_{SS} = –12 V		–115	–200	
I_{CC}	Supply current from V_{CC}	No load All inputs at 0 or 5 V	V_{DD} = 5 V,	V_{SS} = –5 V			750	µA
			V_{DD} = 12 V,	V_{SS} = –12 V			750	

DRIVER SECTION

electrical characteristics over operating free-air temperature range, V_{DD} = 12 V, V_{SS} = –12 V, V_{CC} = 5 V ±10% (unless otherwise noted)

PARAMETER		TEST CONDITIONS			MIN	TYP†	MAX	UNIT
V_{OH}	High-level output voltage	V_{IL} = 0.8 V, See Figure 1	R_L = 3 kΩ,	V_{DD} = 5 V, V_{SS} = –5 V	4	4.5		V
				V_{DD} = 12 V V_{SS} = –12 V	10	10.8		
V_{OL}	Low-level output voltage (see Note 3)	V_{IH} = 0.8 V, See Figure 1	R_L = 3 kΩ,	V_{DD} = 5 V, V_{SS} = –5 V		–4.4	–4	V
				V_{DD} = 12 V V_{SS} = –12 V		–10.7	–10	
I_{IH}	High-level input current	V_I = 5 V,	See Figure 2				1	µA
I_{IL}	Low-level input current	V_I = 0,	See Figure 2				–1	µA
$I_{OS(H)}$	High-level short-circuit output current (see Note 4)	V_I = 0.8 V, See FIgure 1	V_O = 0 or V_O = V_{SS},		–4.5	–12	–19.5	mA
$I_{OS(L)}$	Low-level short-circuit output current (see Note 4)	V_I = 2 V, See Figure 1	V_O = 0 or V_O = V_{DD},		4.5	12	19.5	mA
r_o	Output resistance	V_{DD} = V_{SS} = V_{CC} = 0, See Note 5	V_O = – 2 V to 2 V,		300	400		Ω

† All typical values are at T_A = 25°C.

NOTES: 3. The algebraic convention, where the more positive (less negative) limit is designated as maximum, is used in this data sheet for logic levels only, e.g., if –10 V is a maximum, the typical value is a more negative voltage.
4. Not more than one output should be shorted at one time.
5. Test conditions are those specified by TIA/EIA-232-F.

switching characteristics, V_{DD} = 12 V, V_{SS} = –12 V, V_{CC} = 5 V ±10%, T_A = 25°C (unless otherwise noted) (see Figure 3)

PARAMETER		TEST CONDITIONS	MIN	TYP	MAX	UNIT
t_{PLH}	Propagation delay time, low- to high-level output (see Note 6)	R_L = 3 kΩ to 7 kΩ, C_L = 15 pF		1.2	3	µs
t_{PHL}	Propagation delay time, high- to low-level output (see Note 6)			2.5	3.5	µs
t_{TLH}	Transition time, low- to high-level output		0.53	2	3.2	µs
t_{THL}	Transition time, high- to low-level output		0.53	2	3.2	µs
t_{TLH}	Transition time, low- to high-level output (see Note 7)	R_L = 3 kΩ to 7 kΩ, C_L = 2500 pF		1		µs
t_{THL}	Transition time, high- to low-level output (see Note 7)			1		µs
S_R	Output slew rate (see Note 7)	R_L = 3 kΩ to 7 kΩ, C_L = 15 pF	4	10	30	V/µs

NOTES: 6. t_{PHL} and t_{PLH} include the additional time due to on-chip slew rate and are measured at the 50% points.
7. Measured between 3-V and –3-V points of output waveform TIA/EIA-232-F conditions), and all unused inputs are tied either high or low.

RECEIVER SECTION

electrical characteristics over operating free-air temperature range, V_{DD} = 12 V, V_{SS} = −12 V, V_{CC} = 5 V ±10% (unless otherwise noted)

PARAMETER		TEST CONDITIONS			MIN	TYP†	MAX	UNIT
V_{IT+}	Positive-going input threshhold voltage	See Figure 5			1.6	2.1	2.55	V
V_{IT-}	Negative-going input threshhold voltage	See Figure 5			0.65	1	1.25	V
V_{hys}	Input hysteresis voltage ($V_{IT+} - V_{IT-}$)				600	1100		mV
V_{OH}	High-level output voltage	V_I = 0.75 V,	I_{OH} = −20 µA,	See Figure 5 and Note 8	3.5			V
		V_I = 0.75 V, I_{OH} = −1 mA, See Figure 5	V_{CC} = 4.5 V		2.8	4.4		
			V_{CC} = 5 V		3.8	4.9		
			V_{CC} = 5.5 V		4.3	5.4		
V_{OL}	Low-level output voltage	V_I = 3 V,	I_{OL} = 3.2 mA,	See Figure 5		0.17	0.4	V
I_{IH}	High-level input current	V_I = 3 V			0.43	0.55	1	mA
		V_I = 25 V			3.6	4.6	8.3	
I_{IL}	Low-level input current	V_I = −3 V			−0.43	−0.55	−1	mA
		V_I = −25 V			−3.6	−5.0	−8.3	
$I_{OS(H)}$	Short-circuit output at high level	V_I = 0.75 V,	V_O = 0,	See Figure 4		−8	−15	mA
$I_{OS(L)}$	Short-circuit output at low level	V_I = V_{CC},	V_O = V_{CC},	See Figure 4		13	25	mA

† All typical values are at T_A = 25°C.

NOTE 8: If the inputs are left unconnected, the receiver interprets this as an input low, and the receiver outputs remain in the high state.

switching characteristics, V_{DD} = 12 V, V_{SS} = −12 V, V_{CC} = 5 V ±10%, T_A = 25°C (unless otherwise noted) (see Figure 6)

PARAMETER		TEST CONDITIONS	MIN	TYP	MAX	UNIT
t_{PLH}	Propagation delay time, low- to high-level output	R_L = 5 kΩ, C_L = 50 pF		3	4	µs
t_{PHL}	Propagation delay time, high- to low-level output			3	4	µs
t_{TLH}	Transition time, low- to high-level output			300	450	ns
t_{THL}	Transition time, high- to low-level output			100	300	ns
$t_{w(N)}$	Duration of longest pulse rejected as noise (see Note 9)	R_L = 5 kΩ, C_L = 50 pF	1		4	µs

NOTE 9: The receiver ignores any postive- or negative-going pulse that is less than the minimum value of $t_{w(N)}$ and accepts any positive- or negative-going pulse greater than the maximum of $t_{w(N)}$.

PARAMETER MEASUREMENT INFORMATION

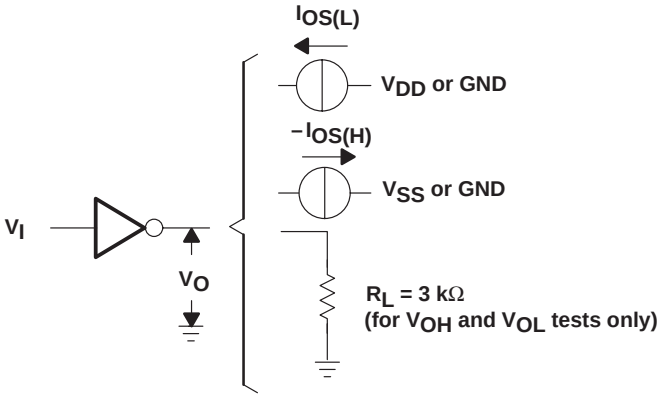

Figure 1. Driver Test Circuit for V_{OH}, V_{OL}, $I_{OS(H)}$, and $I_{OS(L)}$

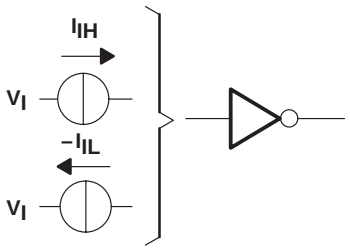

Figure 2. Driver Test Circuit for I_{IH} and I_{IL}

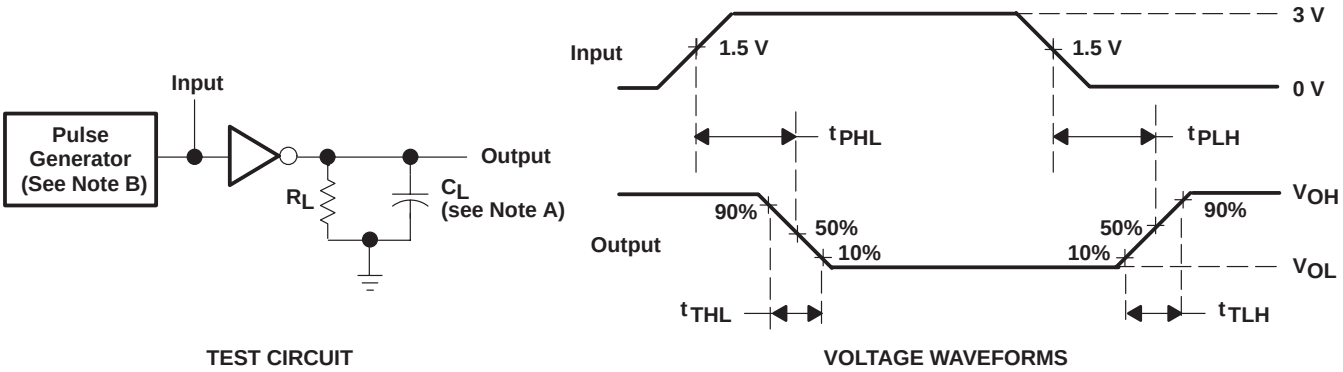

NOTES: A. C_L includes probe and jig capacitance.
B. The pulse generator has the following characteristics: t_W = 25 µs, PRR = 20 kHz, Z_O = 50 Ω, $t_r = t_f$ < 50 ns.

Figure 3. Driver Test Circuit and Voltage Waveforms

PARAMETER MEASUREMENT INFORMATION

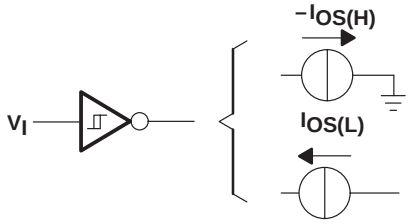

Figure 4. Receiver Test Circuit for $I_{OS(H)}$ and $I_{OS(L)}$

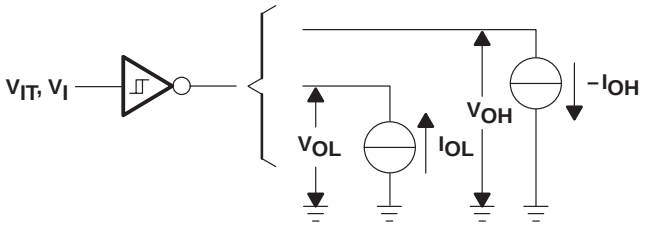

Figure 5. Receiver Test Circuit for V_{IT}, V_{OH}, and V_{OL}

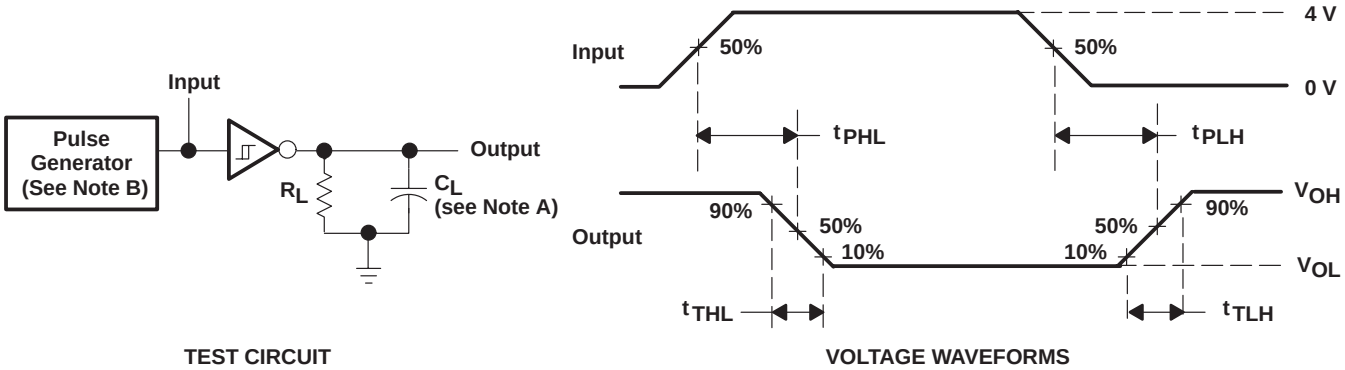

NOTES: A. C_L includes probe and jig capacitance.
B. The pulse generator has the following characteristics: t_w = 25 µs, PRR = 20 kHz, Z_O = 50 Ω, $t_r = t_f$ < 50 ns.

Figure 6. Receiver Propagation and Transition Times

APPLICATION INFORMATION

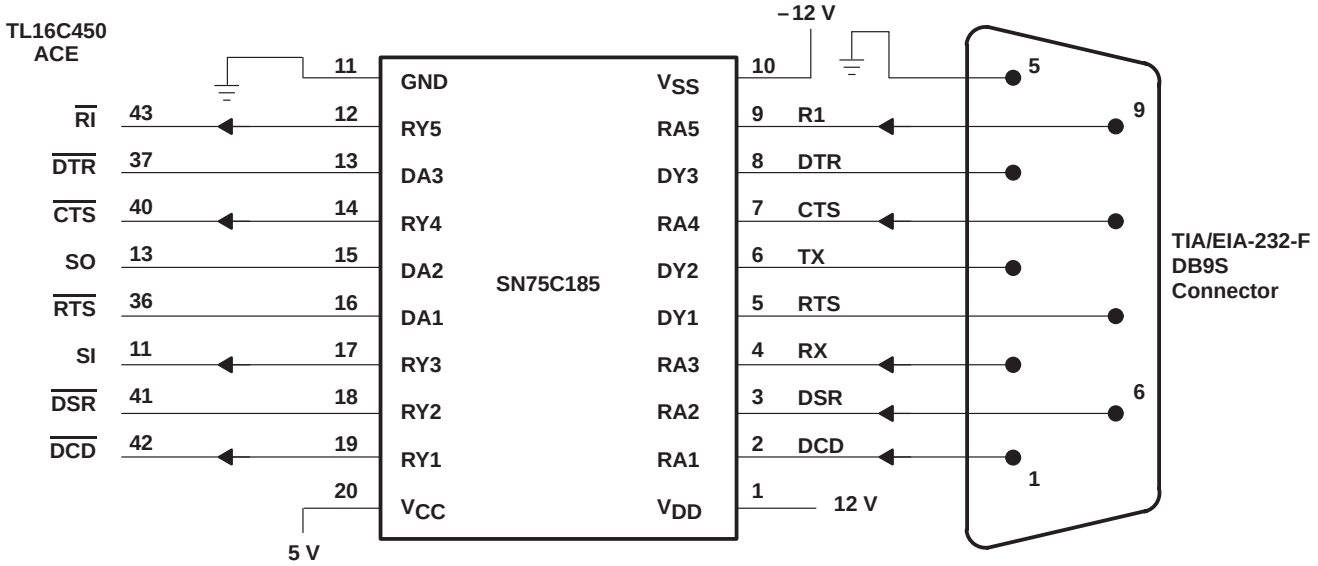

Figure 7. Typical Connection

The SN75C185 supports data rates up to 120 kbit/s over a 3-meter cable. Laboratory experiments show that, with C_L = 500 pF and R_L = 3 kΩ (minimum RS-232 input resistance load), the device can support this data rate. The 500-pF load approximates a typical 3-meter cable because the maximum RS-232 specification is 2500 pF (or about 15 meters). Figure 8 shows the test circuit used. Temperature was varied from 0°C to 70°C for the experiment.

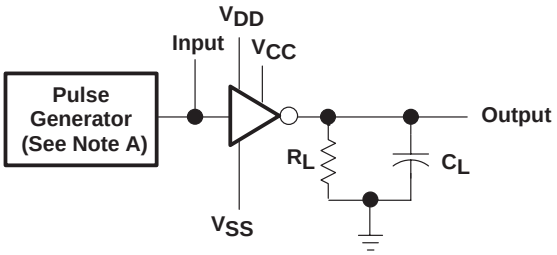

NOTES: A. The pulse generator has the following characteristics: PRR = 60 kHz (120 kbit/s), Z_O = 50 Ω.
B. V_{CC} = 5 V, V_{DD} = 12 V, V_{SS} = –12 V.

Figure 8. Data-Rate Test Circuit

PACKAGING INFORMATION

Orderable Device	Status (1)	Package Type	Package Drawing	Pins	Package Qty	Eco Plan (2)	Lead/Ball Finish (6)	MSL Peak Temp (3)	Op Temp (°C)	Device Marking (4/5)	Samples
SN75C185DW	ACTIVE	SOIC	DW	20	25	Green (RoHS & no Sb/Br)	NIPDAU	Level-1-260C-UNLIM	0 to 70	SN75C185	Samples
SN75C185DWG4	ACTIVE	SOIC	DW	20	25	Green (RoHS & no Sb/Br)	NIPDAU	Level-1-260C-UNLIM	0 to 70	SN75C185	Samples
SN75C185DWR	ACTIVE	SOIC	DW	20	2000	Green (RoHS & no Sb/Br)	NIPDAU	Level-1-260C-UNLIM	0 to 70	SN75C185	Samples
SN75C185N	ACTIVE	PDIP	N	20	20	Pb-Free (RoHS)	NIPDAU	N / A for Pkg Type	0 to 70	SN75C185N	Samples
SN75C185NE4	ACTIVE	PDIP	N	20	20	Pb-Free (RoHS)	NIPDAU	N / A for Pkg Type	0 to 70	SN75C185N	Samples

(1) The marketing status values are defined as follows:
ACTIVE: Product device recommended for new designs.
LIFEBUY: TI has announced that the device will be discontinued, and a lifetime-buy period is in effect.
NRND: Not recommended for new designs. Device is in production to support existing customers, but TI does not recommend using this part in a new design.
PREVIEW: Device has been announced but is not in production. Samples may or may not be available.
OBSOLETE: TI has discontinued the production of the device.

(2) **RoHS:** TI defines "RoHS" to mean semiconductor products that are compliant with the current EU RoHS requirements for all 10 RoHS substances, including the requirement that RoHS substance do not exceed 0.1% by weight in homogeneous materials. Where designed to be soldered at high temperatures, "RoHS" products are suitable for use in specified lead-free processes. TI may reference these types of products as "Pb-Free".
RoHS Exempt: TI defines "RoHS Exempt" to mean products that contain lead but are compliant with EU RoHS pursuant to a specific EU RoHS exemption.
Green: TI defines "Green" to mean the content of Chlorine (Cl) and Bromine (Br) based flame retardants meet JS709B low halogen requirements of <=1000ppm threshold. Antimony trioxide based flame retardants must also meet the <=1000ppm threshold requirement.

(3) MSL, Peak Temp. - The Moisture Sensitivity Level rating according to the JEDEC industry standard classifications, and peak solder temperature.

(4) There may be additional marking, which relates to the logo, the lot trace code information, or the environmental category on the device.

(5) Multiple Device Markings will be inside parentheses. Only one Device Marking contained in parentheses and separated by a "~" will appear on a device. If a line is indented then it is a continuation of the previous line and the two combined represent the entire Device Marking for that device.

(6) Lead/Ball Finish - Orderable Devices may have multiple material finish options. Finish options are separated by a vertical ruled line. Lead/Ball Finish values may wrap to two lines if the finish value exceeds the maximum column width.

Important Information and Disclaimer: The information provided on this page represents TI's knowledge and belief as of the date that it is provided. TI bases its knowledge and belief on information provided by third parties, and makes no representation or warranty as to the accuracy of such information. Efforts are underway to better integrate information from third parties. TI has taken and continues to take reasonable steps to provide representative and accurate information but may not have conducted destructive testing or chemical analysis on incoming materials and chemicals. TI and TI suppliers consider certain information to be proprietary, and thus CAS numbers and other limited information may not be available for release.

In no event shall TI's liability arising out of such information exceed the total purchase price of the TI part(s) at issue in this document sold by TI to Customer on an annual basis.

TAPE AND REEL INFORMATION

REEL DIMENSIONS

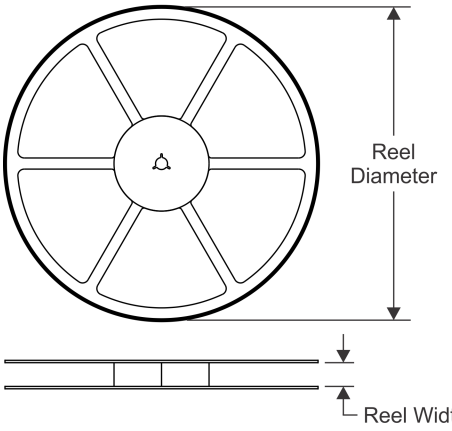

TAPE DIMENSIONS

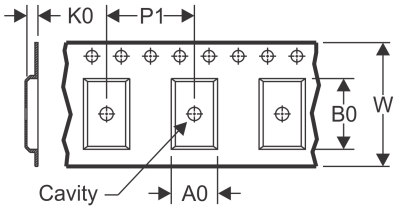

A0	Dimension designed to accommodate the component width
B0	Dimension designed to accommodate the component length
K0	Dimension designed to accommodate the component thickness
W	Overall width of the carrier tape
P1	Pitch between successive cavity centers

QUADRANT ASSIGNMENTS FOR PIN 1 ORIENTATION IN TAPE

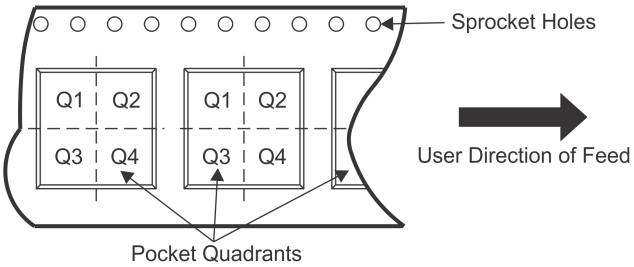

*All dimensions are nominal

Device	Package Type	Package Drawing	Pins	SPQ	Reel Diameter (mm)	Reel Width W1 (mm)	A0 (mm)	B0 (mm)	K0 (mm)	P1 (mm)	W (mm)	Pin1 Quadrant
SN75C185DWR	SOIC	DW	20	2000	330.0	24.4	10.8	13.3	2.7	12.0	24.0	Q1

TAPE AND REEL BOX DIMENSIONS

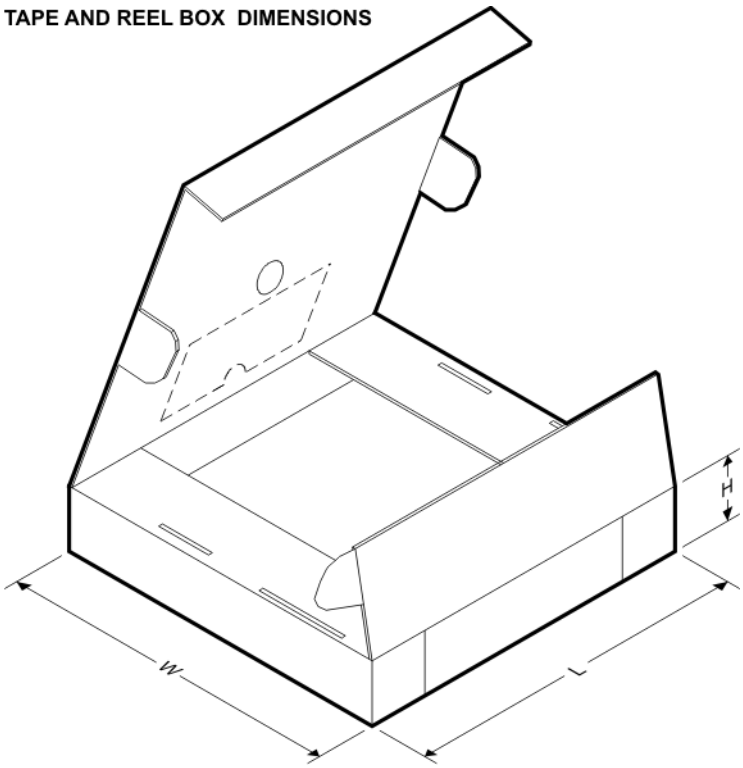

*All dimensions are nominal

Device	Package Type	Package Drawing	Pins	SPQ	Length (mm)	Width (mm)	Height (mm)
SN75C185DWR	SOIC	DW	20	2000	350.0	350.0	43.0

N (R–PDIP–T**) PLASTIC DUAL–IN–LINE PACKAGE

16 PINS SHOWN

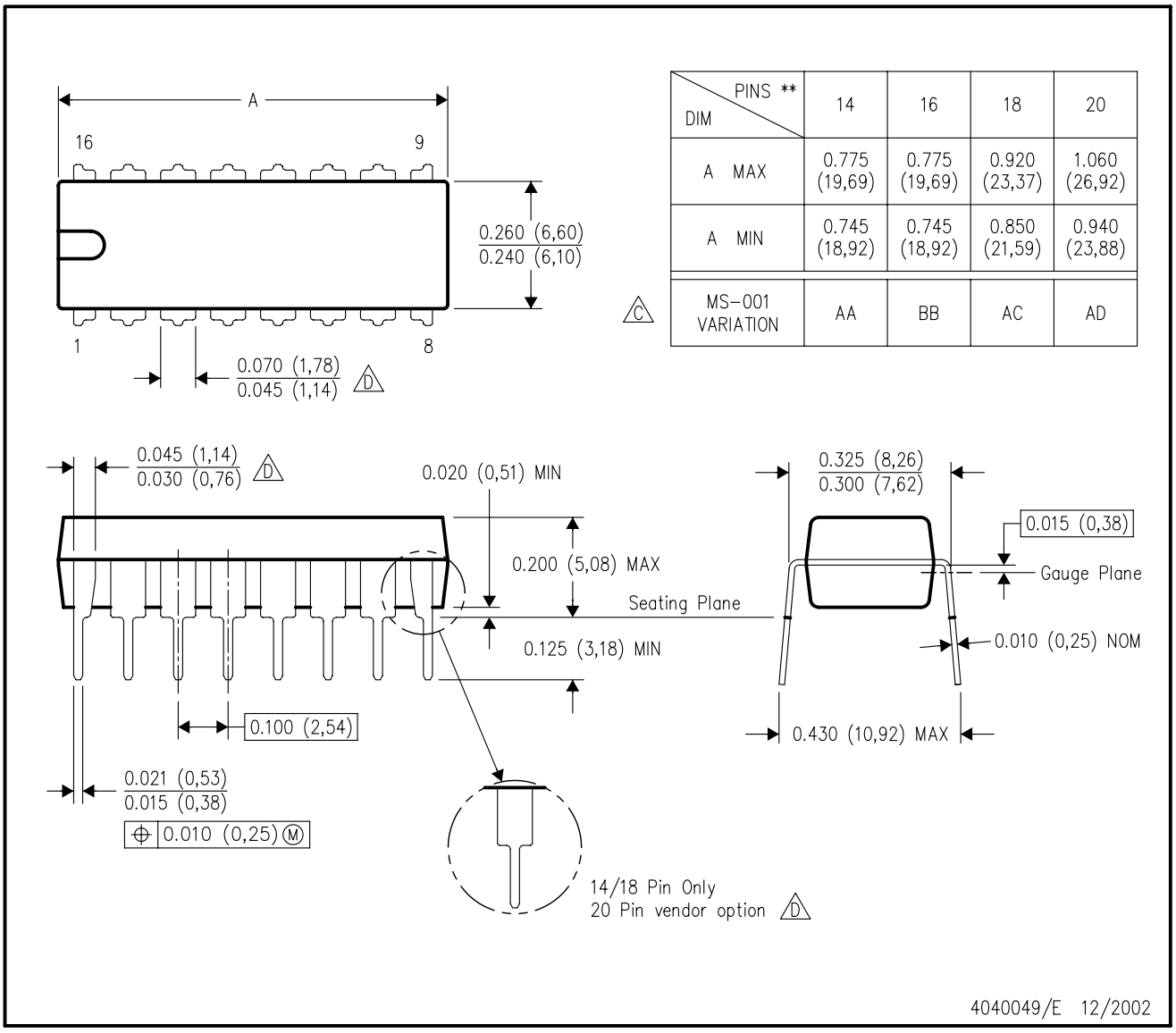

DIM \ PINS **	14	16	18	20
A MAX	0.775 (19,69)	0.775 (19,69)	0.920 (23,37)	1.060 (26,92)
A MIN	0.745 (18,92)	0.745 (18,92)	0.850 (21,59)	0.940 (23,88)
MS–001 VARIATION (C)	AA	BB	AC	AD

NOTES:
A. All linear dimensions are in inches (millimeters).
B. This drawing is subject to change without notice.
C. Falls within JEDEC MS–001, except 18 and 20 pin minimum body length (Dim A).
D. The 20 pin end lead shoulder width is a vendor option, either half or full width.

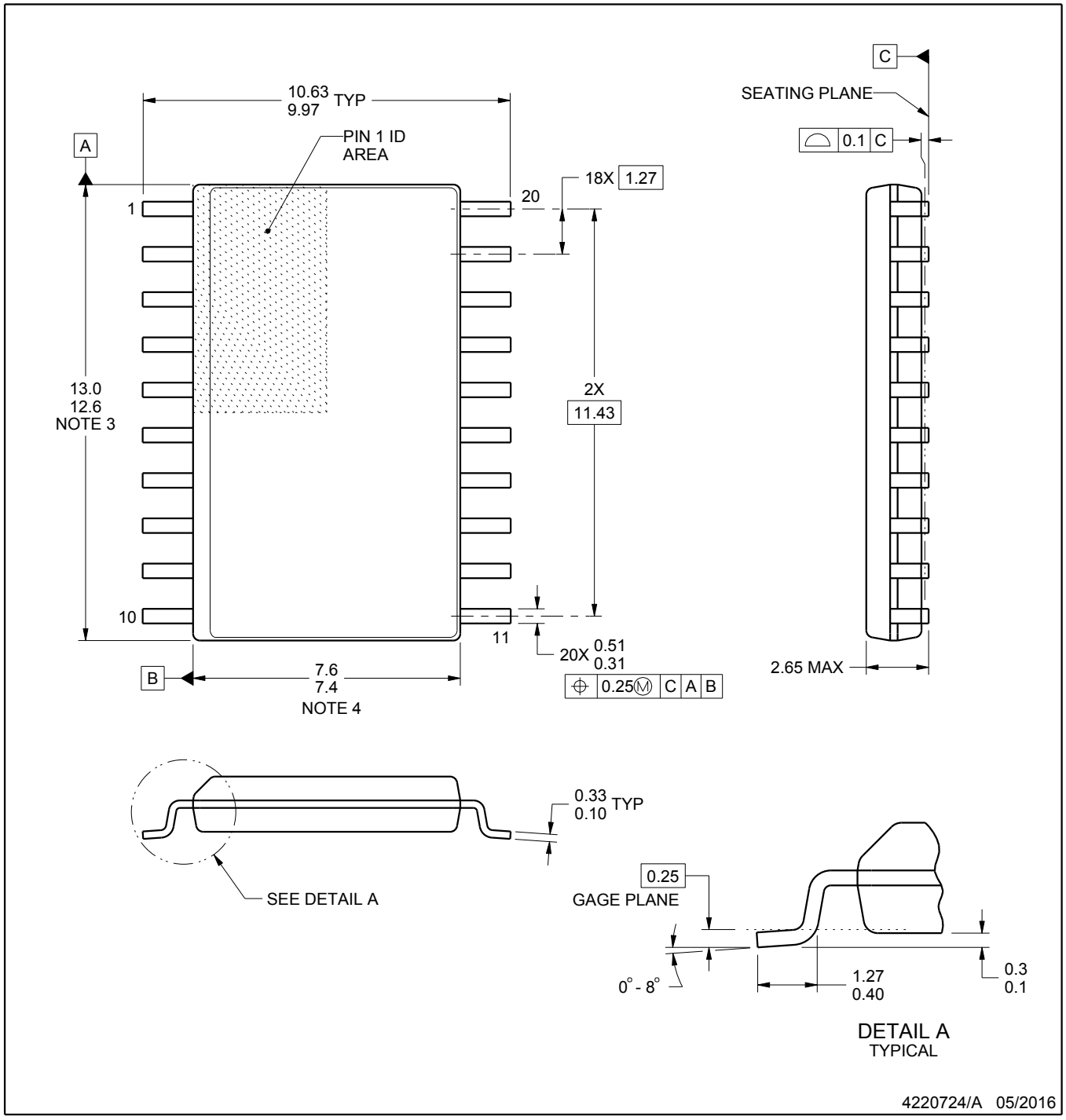

NOTES:

1. All linear dimensions are in millimeters. Dimensions in parenthesis are for reference only. Dimensioning and tolerancing per ASME Y14.5M.
2. This drawing is subject to change without notice.
3. This dimension does not include mold flash, protrusions, or gate burrs. Mold flash, protrusions, or gate burrs shall not exceed 0.15 mm per side.
4. This dimension does not include interlead flash. Interlead flash shall not exceed 0.43 mm per side.
5. Reference JEDEC registration MS-013.

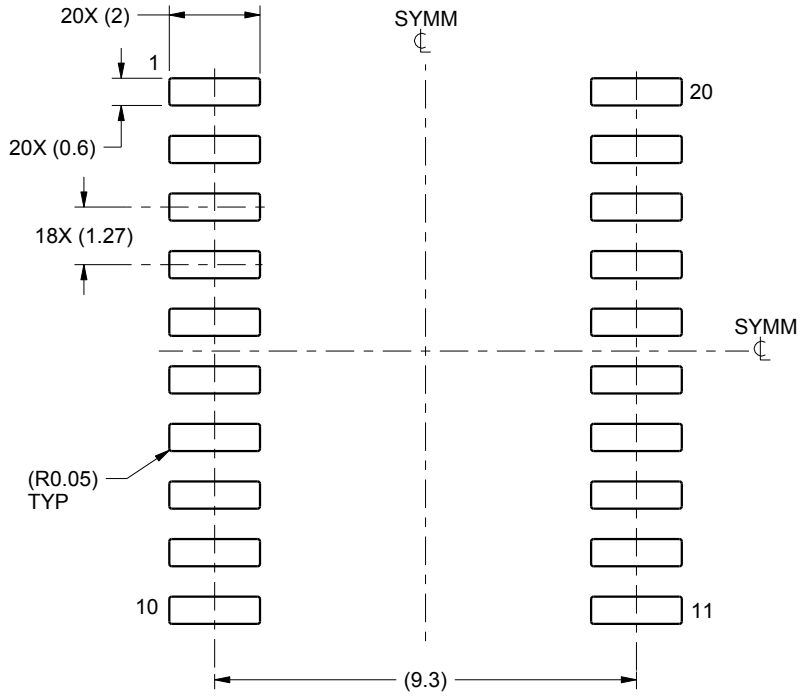

LAND PATTERN EXAMPLE
SCALE:6X

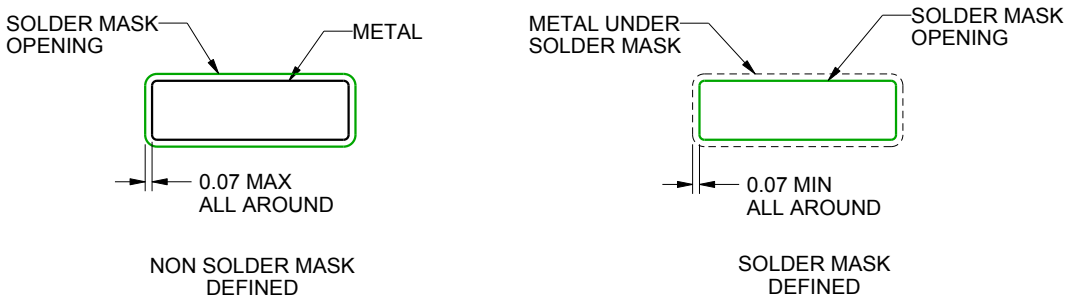

SOLDER MASK DETAILS

4220724/A 05/2016

NOTES: (continued)

6. Publication IPC-7351 may have alternate designs.
7. Solder mask tolerances between and around signal pads can vary based on board fabrication site.

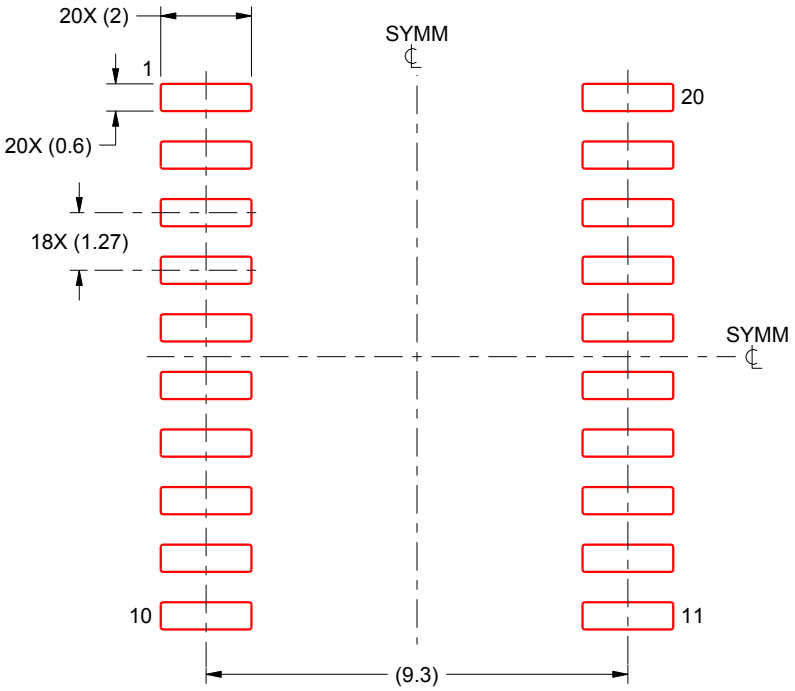

SOLDER PASTE EXAMPLE
BASED ON 0.125 mm THICK STENCIL
SCALE:6X

4220724/A 05/2016

NOTES: (continued)

8. Laser cutting apertures with trapezoidal walls and rounded corners may offer better paste release. IPC-7525 may have alternate design recommendations.
9. Board assembly site may have different recommendations for stencil design.

IMPORTANT NOTICE AND DISCLAIMER

TI PROVIDES TECHNICAL AND RELIABILITY DATA (INCLUDING DATASHEETS), DESIGN RESOURCES (INCLUDING REFERENCE DESIGNS), APPLICATION OR OTHER DESIGN ADVICE, WEB TOOLS, SAFETY INFORMATION, AND OTHER RESOURCES “AS IS” AND WITH ALL FAULTS, AND DISCLAIMS ALL WARRANTIES, EXPRESS AND IMPLIED, INCLUDING WITHOUT LIMITATION ANY IMPLIED WARRANTIES OF MERCHANTABILITY, FITNESS FOR A PARTICULAR PURPOSE OR NON-INFRINGEMENT OF THIRD PARTY INTELLECTUAL PROPERTY RIGHTS.

These resources are intended for skilled developers designing with TI products. You are solely responsible for (1) selecting the appropriate TI products for your application, (2) designing, validating and testing your application, and (3) ensuring your application meets applicable standards, and any other safety, security, or other requirements. These resources are subject to change without notice. TI grants you permission to use these resources only for development of an application that uses the TI products described in the resource. Other reproduction and display of these resources is prohibited. No license is granted to any other TI intellectual property right or to any third party intellectual property right. TI disclaims responsibility for, and you will fully indemnify TI and its representatives against, any claims, damages, costs, losses, and liabilities arising out of your use of these resources.

TI’s products are provided subject to TI’s Terms of Sale (www.ti.com/legal/termsofsale.html) or other applicable terms available either on ti.com or provided in conjunction with such TI products. TI’s provision of these resources does not expand or otherwise alter TI’s applicable warranties or warranty disclaimers for TI products.

Mailing Address: Texas Instruments, Post Office Box 655303, Dallas, Texas 75265
Copyright © 2020, Texas Instruments Incorporated