LMH0044 SMPTE 292M / 259M Adaptive Cable Equalizer

Check for Samples: LMH0044

FEATURES

- **SMPTE 292M, SMPTE 344M and SMPTE 259M Compliant**
- **Supports DVB-ASI at 270 Mbps**
- **Data rates: 125 Mbps to 1.485 Gbps**
- **Equalizes up to 200 Meters of Belden 1694A at 1.485 Gbps or up to 400 meters of Belden 1694A at 270 Mbps**
- **Manual Bypass and Output Mute with a Programmable Threshold**
- **Single-Ended or Differential Input**
- **50Ω Differential Outputs**
- **Single 3.3V Supply Operation**
- **208 mW Typical Power Consumption with 3.3V Supply**
- **Replaces the GS1574 and GS1574A**

APPLICATIONS

- **SMPTE 292M, SMPTE 344M, and SMPTE 259M Serial Digital Interfaces**
- **Serial Digital Data Equalization and Reception**
- **Data Recovery Equalization**

DESCRIPTION

The LMH0044 SMPTE 292M / 259M adaptive cable equalizer is a monolithic integrated circuit for equalizing data transmitted over cable (or any media with similar dispersive loss characteristics). The equalizer operates over a wide range of data rates from 125 Mbps to 1.485 Gbps and supports SMPTE 292M, SMPTE 344M and SMPTE 259M.

The LMH0044 implements DC restoration to correctly handle pathological data conditions (DC restoration may be bypassed for low data rate applications). The equalizer may be driven in either a single ended or differential configuration.

Additional features include separate carrier detect and output mute pins which may be tied together to mute the output when no signal is present. A programmable mute reference is provided to mute the output at a selectable level of signal degradation.

Typical Application

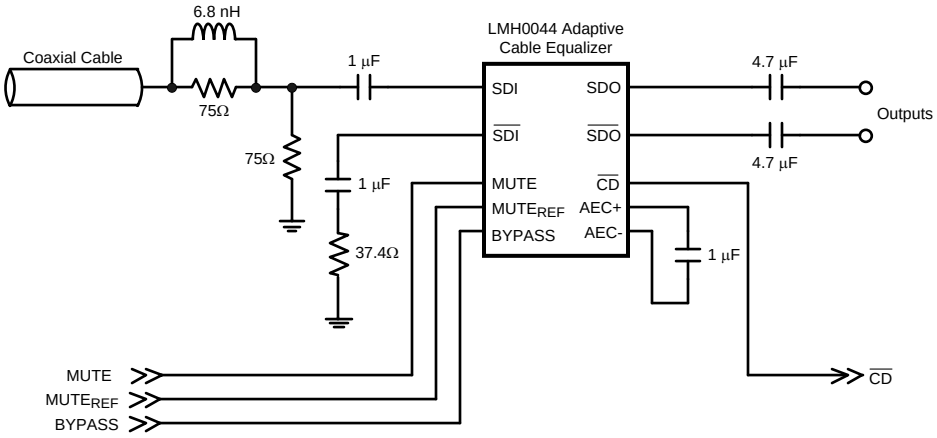

Please be aware that an important notice concerning availability, standard warranty, and use in critical applications of Texas Instruments semiconductor products and disclaimers thereto appears at the end of this data sheet.

All trademarks are the property of their respective owners.

PRODUCTION DATA information is current as of publication date. Products conform to specifications per the terms of the Texas Instruments standard warranty. Production processing does not necessarily include testing of all parameters.

Copyright © 2006–2013, Texas Instruments Incorporated

These devices have limited built-in ESD protection. The leads should be shorted together or the device placed in conductive foam during storage or handling to prevent electrostatic damage to the MOS gates.

Absolute Maximum Ratings[1][2]

Supply Voltage		−0.5V to 3.6V
Input Voltage (all inputs)		−0.3V to V_{CC}+0.3V
Storage Temperature Range		−65°C to +150°C
Junction Temperature		+150°C
Lead Temperature (Soldering 4 Sec)		+260°C
Package Thermal Resistance	θ_{JA} 16-pin WQFN	+43°C/W
	θ_{JC} 16-pin WQFN	+9°C/W
ESD Rating (HBM)		8kV
ESD Rating (MM)		250V

(1) "Absolute Maximum Ratings" are those parameter values beyond which the life and operation of the device cannot be ensured. The stating herein of these maximums shall not be construed to imply that the device can or should be operated at or beyond these values. The table of "Electrical Characteristics" specifies acceptable device operating conditions.
(2) If Military/Aerospace specified devices are required, please contact the Texas Instruments Sales Office/Distributors for availability and specifications.

Recommended Operating Conditions

Supply Voltage (V_{CC} – V_{EE})	3.3V ±5%
Input Coupling Capacitance	1.0 µF
AEC Capacitor (Connected between AEC+ and AEC-)	1.0 µF
Operating Free Air Temperature (T_A)	0°C to +85°C

DC Electrical Characteristics

Over Supply Voltage and Operating Temperature ranges, unless otherwise specified[1][2].

Parameter		Test Conditions	Reference	Min	Typ	Max	Units
V_{CMIN}	Input Common Mode Voltage		SDI, $\overline{SDI}$		1.9		V
V_{SDI}	Input Voltage Swing	At LMH0044 input[3][4]		720	800	950	mV_{P-P}
V_{CMOUT}	Output Common Mode Voltage		SDO, $\overline{SDO}$		V_{CC} – V_{SDO}/2		V
V_{SDO}	Output Voltage Swing	50Ω load, differential			750		mV_{P-P}
	$MUTE_{REF}$ DC Voltage (floating)		$MUTE_{REF}$		1.3		V
	$MUTE_{REF}$ Range				0.7		V
	$\overline{CD}$ Output Voltage	Carrier not present	$\overline{CD}$	2.6			V
		Carrier present				0.4	V
	MUTE Input Voltage	Min to mute outputs	MUTE	3.0			V
		Max to force outputs active				0.8	V
I_{CC}	Supply Current	See[5]			63	77	mA

(1) Current flow into device pins is defined as positive. Current flow out of device pins is defined as negative. All voltages are stated referenced to V_{EE} = 0 Volts.
(2) Typical values are stated for V_{CC} = +3.3V and T_A = +25°C.
(3) Specification is ensured by characterization.
(4) The maximum input voltage swing assumes a nonstressing, DC-balance signal; specifically, the SMPTE-recommended color bar test signal. Pathological or other stressing signals may not be used. This specification is for 0m cable only.
(5) Supply current depends on the amount of cable being equalized. The current is highest for short cable and decreases as the cable length is increased. Refer to Figure 2 and Figure 3.

Copyright © 2006–2013, Texas Instruments Incorporated

AC Electrical Characteristics

Over Supply Voltage and Operating Temperature ranges, unless otherwise specified(1).

Parameter		Test Conditions	Reference	Min	Typ	Max	Units
BR_{MIN}	Minimum Input Data Rate		SDI, $\overline{SDI}$		125		Mbps
BR_{MAX}	Maximum Input Data Rate					1485	Mbps
	Jitter for various Cable Lengths (with equalizer pathological)	270 Mbps, Belden 1694A, 400 meters(2)			0.2		UI
		270 Mbps, Belden 8281, 280 meters(2)			0.2		UI
		1.485 Gbps, Belden 1694A, 140 meters(2)			0.25		UI
		1.485 Gbps, Belden 8281, 100 meters(2)			0.25		UI
		1.485 Gbps, Belden 1694A, 200 meters(2)			0.3		UI
t_r,t_f	Output Rise Time, Fall Time	20% – 80%(2)	SDO, $\overline{SDO}$		100	220	ps
	Mismatch in Rise/Fall Time	See(2)			2	15	ps
t_{OS}	Output Overshoot	See(2)			1	5	%
R_{OUT}	Output Resistance	Single-Ended(3)			50		Ω
RL_{IN}	Input Return Loss	See(4)	SDI, $\overline{SDI}$	15	18-20		dB
R_{IN}	Input Resistance	Single-Ended			1.3		kΩ
C_{IN}	Input Capacitance	Single-Ended(3)			1		pF

(1) Typical values are stated for V_{CC} = +3.3V and T_A = +25°C.
(2) Specification is ensured by characterization.
(3) Specification is ensured by design.
(4) Input return loss is dependent on board design. The LMH0044 meets this specification on the SD044 evaluation board from 5 MHz to 1.5 GHz.

Connection Diagram

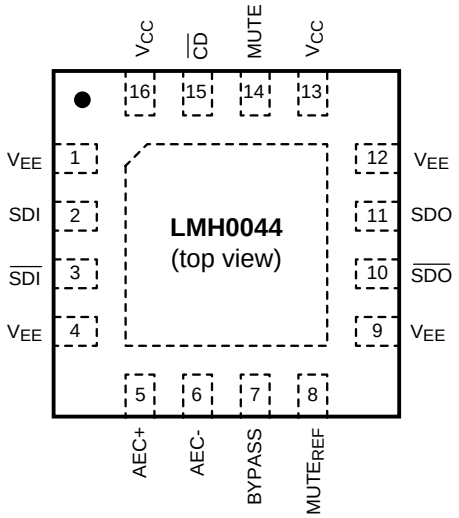

The exposed die attach pad is a negative electrical terminal for this device. It should be connected to the negative power supply voltage.

Figure 1. 16-Pin WQFN Package
See Package Number RUM0016A

Table 1. Pin Descriptions

Pin No.	Name	Description
1	V_{EE}	Negative power supply (ground).
2	SDI	Serial data true input.
3	$\overline{SDI}$	Serial data complement input.
4	V_{EE}	Negative power supply (ground).
5	AEC+	AEC loop filter external capacitor (1µF) positive connection.
6	AEC-	AEC loop filter external capacitor (1µF) negative connection.
7	BYPASS	Bypasses equalization and DC restoration when high. No equalization occurs in this mode.
8	$MUTE_{REF}$	Mute reference. Sets the threshold for $\overline{CD}$ and (with $\overline{CD}$ tied to MUTE) determines the maximum cable to be equalized before muting. $MUTE_{REF}$ may be unconnected for maximum equalization.
9	V_{EE}	Negative power supply (ground).
10	$\overline{SDO}$	Serial data complement output.
11	SDO	Serial data true output.
12	V_{EE}	Negative power supply (ground).
13	V_{CC}	Positive power supply (+3.3V).
14	MUTE	Output mute. To disable the mute function and enable the output, MUTE must be tied to GND or a low level signal. To force the outputs to a muted state, tie to V_{CC}. $\overline{CD}$ may be tied to this pin to inhibit the output when no input signal is present. MUTE has no function in BYPASS mode.
15	$\overline{CD}$	Carrier detect. $\overline{CD}$ is high when no signal is present. $\overline{CD}$ has no function in BYPASS mode.
16	V_{CC}	Positive power supply (+3.3V).
DAP	V_{EE}	Connect exposed DAP to negative power supply.

Block Diagram

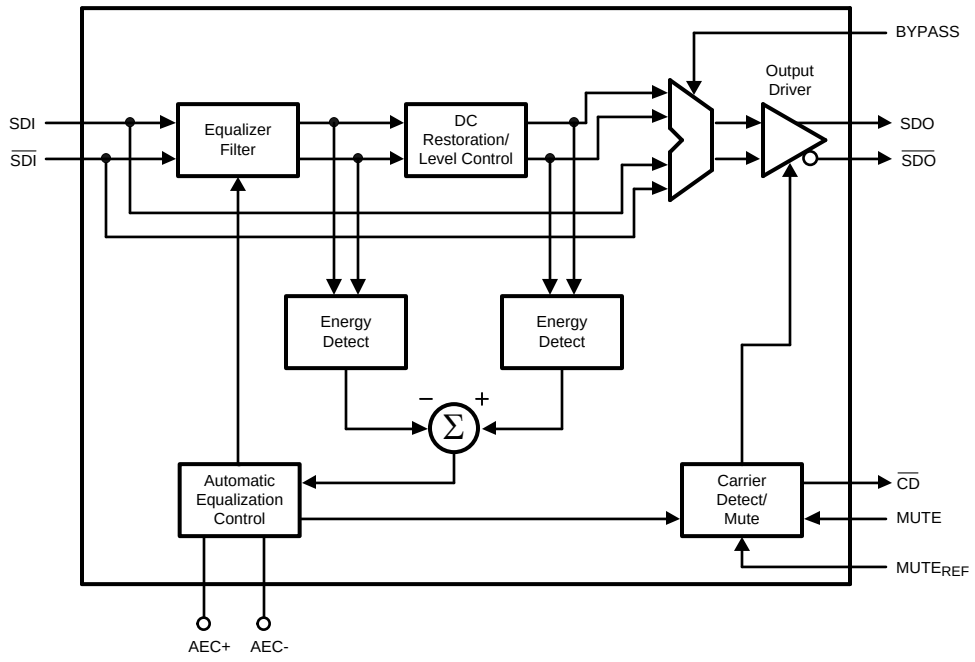

Copyright © 2006–2013, Texas Instruments Incorporated

Device Operation

BLOCK DESCRIPTION

The **Equalizer Filter** block is a multi-stage adaptive filter. If Bypass is high, the equalizer filter is disabled.

The **DC Restoration / Level Control** block receives the differential signals from the equalizer filter block. This block incorporates a self-biasing DC restoration circuit to fully DC restore the signals. If Bypass is high, this function is disabled.

The signals before and after the DC Restoration / Level Control block are used to generate the **Automatic Equalization Control (AEC)** signal. This control signal sets the gain and bandwidth of the equalizer filter. The loop response in the AEC block is controlled by an external 1µF capacitor placed across the AEC+ and AEC- pins.

The **Carrier Detect / Mute** block generates the carrier detect signal and controls the mute function of the output. This block utilizes the **$\overline{\text{CD}}$** and **MUTE** signals along with **Mute Reference (MUTE_{REF})**.

The **Output Driver** produces SDO and $\overline{\text{SDO}}$.

MUTE REFERENCE (MUTE_{REF})

The mute reference sets the threshold for $\overline{\text{CD}}$ and (with $\overline{\text{CD}}$ tied to MUTE) determines the amount of cable to equalize before automatically muting the outputs. This is set by applying a voltage inversely proportional to the length of cable to equalize. As the applied MUTE_{REF} voltage is increased, the amount of cable that can be equalized before carrier detect is de-asserted and the outputs are muted is decreased. MUTE_{REF} may be left unconnected for maximum equalization before muting.

CARRIER DETECT ($\overline{\text{CD}}$) AND MUTE

Carrier detect $\overline{\text{CD}}$ indicates if a valid signal is present at the LMH0044 input. If MUTE_{REF} is used, the carrier detect threshold will be altered accordingly. $\overline{\text{CD}}$ provides a high voltage when no signal is present at the LMH0044 input. $\overline{\text{CD}}$ is low when a valid input signal is detected.

MUTE can be used to manually mute or enable SDO and $\overline{\text{SDO}}$. Applying a high input to MUTE will mute the LMH0044 outputs. Applying a low input will force the outputs to be active.

$\overline{\text{CD}}$ and MUTE may be tied together to automatically mute the output when no input signal is present.

INPUT INTERFACING

The LMH0044 accepts either differential or single-ended input. The input must be AC coupled. Transformer coupling is not supported.

The LMH0044 correctly handles equalizer pathological signals for standard definition and high definition serial digital video, as described in SMPTE RP 178 and RP 198, respectively.

OUTPUT INTERFACING

The SDO and $\overline{\text{SDO}}$ outputs are internally loaded with 50Ω. They produce a 750 $\text{mV}_{\text{P-P}}$ differential output, or a 375 $\text{mV}_{\text{P-P}}$ single-ended output.

Copyright © 2006–2013, Texas Instruments Incorporated

APPLICATION INFORMATION

PCB LAYOUT RECOMMENDATIONS

Refer to the following Application Note on TI's website: AN-1372, "LMH0034 PCB Layout Techniques." The PCB layout techniques in the application note apply to the LMH0044 as well.

REPLACING THE GENNUM GS1574A

The LMH0044 is footprint compatible with the Gennum GS1574A.

SUPPLY CURRENT VS. CABLE LENGTH

The supply current (I_{CC}) depends on the amount of cable being equalized. The current is highest for short cable and decreases as the cable length is increased. Figure 2 shows supply current vs. Belden 1694A cable length for 1.485 Gbps data and Figure 3 shows supply current vs. Belden 1694A cable length for 270 Mbps data.

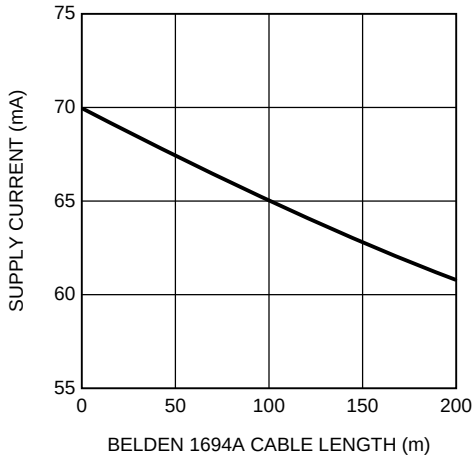

Figure 2. Supply Current vs. Belden 1694A Cable Length, 1.485 Gbps

Copyright © 2006–2013, Texas Instruments Incorporated

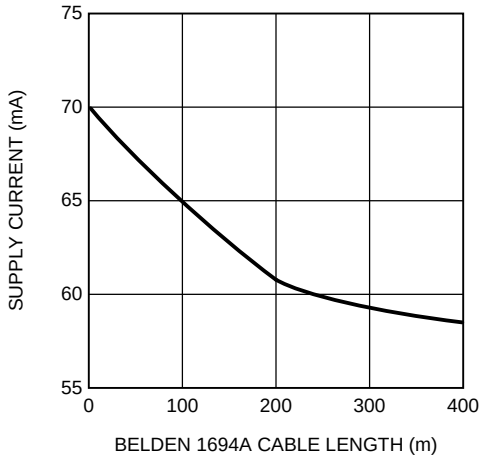

Figure 3. Supply Current vs. Belden 1694A Cable Length, 270 Mbps

REVISION HISTORY

Changes from Revision D (April 2013) to Revision E	Page
• Changed layout of National Data Sheet to TI format	7

Copyright © 2006–2013, Texas Instruments Incorporated

PACKAGING INFORMATION

Orderable Device	Status (1)	Package Type	Package Drawing	Pins	Package Qty	Eco Plan (2)	Lead/Ball Finish (6)	MSL Peak Temp (3)	Op Temp (°C)	Device Marking (4/5)	Samples
LMH0044SQ/NOPB	ACTIVE	WQFN	RUM	16	1000	Green (RoHS & no Sb/Br)	SN	Level-1-260C-UNLIM	0 to 85	L044	Samples
LMH0044SQE/NOPB	ACTIVE	WQFN	RUM	16	250	Green (RoHS & no Sb/Br)	SN	Level-1-260C-UNLIM	0 to 85	L044	Samples

(1) The marketing status values are defined as follows:
ACTIVE: Product device recommended for new designs.
LIFEBUY: TI has announced that the device will be discontinued, and a lifetime-buy period is in effect.
NRND: Not recommended for new designs. Device is in production to support existing customers, but TI does not recommend using this part in a new design.
PREVIEW: Device has been announced but is not in production. Samples may or may not be available.
OBSOLETE: TI has discontinued the production of the device.

(2) **RoHS:** TI defines "RoHS" to mean semiconductor products that are compliant with the current EU RoHS requirements for all 10 RoHS substances, including the requirement that RoHS substance do not exceed 0.1% by weight in homogeneous materials. Where designed to be soldered at high temperatures, "RoHS" products are suitable for use in specified lead-free processes. TI may reference these types of products as "Pb-Free".
RoHS Exempt: TI defines "RoHS Exempt" to mean products that contain lead but are compliant with EU RoHS pursuant to a specific EU RoHS exemption.
Green: TI defines "Green" to mean the content of Chlorine (Cl) and Bromine (Br) based flame retardants meet JS709B low halogen requirements of <=1000ppm threshold. Antimony trioxide based flame retardants must also meet the <=1000ppm threshold requirement.

(3) MSL, Peak Temp. - The Moisture Sensitivity Level rating according to the JEDEC industry standard classifications, and peak solder temperature.

(4) There may be additional marking, which relates to the logo, the lot trace code information, or the environmental category on the device.

(5) Multiple Device Markings will be inside parentheses. Only one Device Marking contained in parentheses and separated by a "~" will appear on a device. If a line is indented then it is a continuation of the previous line and the two combined represent the entire Device Marking for that device.

(6) Lead/Ball Finish - Orderable Devices may have multiple material finish options. Finish options are separated by a vertical ruled line. Lead/Ball Finish values may wrap to two lines if the finish value exceeds the maximum column width.

Important Information and Disclaimer: The information provided on this page represents TI's knowledge and belief as of the date that it is provided. TI bases its knowledge and belief on information provided by third parties, and makes no representation or warranty as to the accuracy of such information. Efforts are underway to better integrate information from third parties. TI has taken and continues to take reasonable steps to provide representative and accurate information but may not have conducted destructive testing or chemical analysis on incoming materials and chemicals. TI and TI suppliers consider certain information to be proprietary, and thus CAS numbers and other limited information may not be available for release.

In no event shall TI's liability arising out of such information exceed the total purchase price of the TI part(s) at issue in this document sold by TI to Customer on an annual basis.

TAPE AND REEL INFORMATION

REEL DIMENSIONS

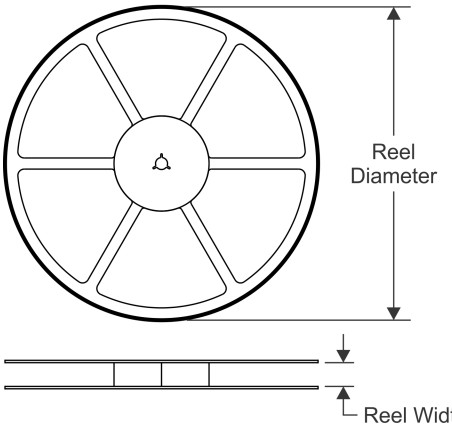

TAPE DIMENSIONS

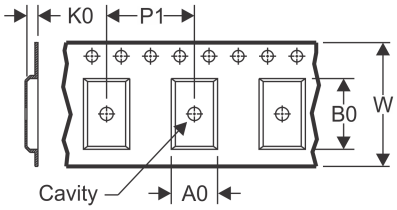

A0	Dimension designed to accommodate the component width
B0	Dimension designed to accommodate the component length
K0	Dimension designed to accommodate the component thickness
W	Overall width of the carrier tape
P1	Pitch between successive cavity centers

QUADRANT ASSIGNMENTS FOR PIN 1 ORIENTATION IN TAPE

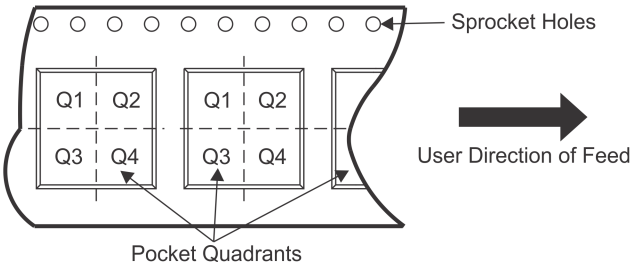

*All dimensions are nominal

Device	Package Type	Package Drawing	Pins	SPQ	Reel Diameter (mm)	Reel Width W1 (mm)	A0 (mm)	B0 (mm)	K0 (mm)	P1 (mm)	W (mm)	Pin1 Quadrant
LMH0044SQ/NOPB	WQFN	RUM	16	1000	178.0	12.4	4.3	4.3	1.3	8.0	12.0	Q1
LMH0044SQE/NOPB	WQFN	RUM	16	250	178.0	12.4	4.3	4.3	1.3	8.0	12.0	Q1

TAPE AND REEL BOX DIMENSIONS

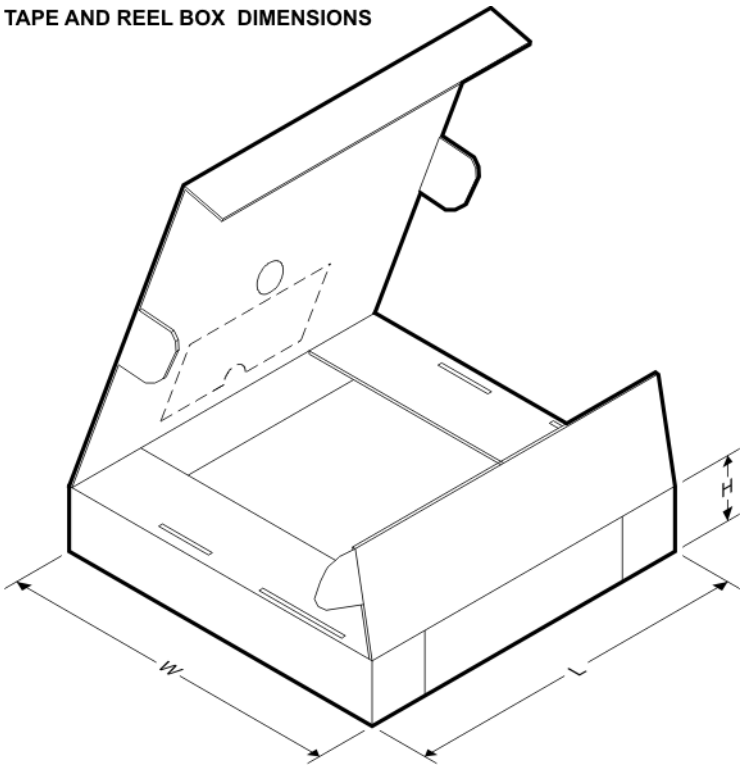

*All dimensions are nominal

Device	Package Type	Package Drawing	Pins	SPQ	Length (mm)	Width (mm)	Height (mm)
LMH0044SQ/NOPB	WQFN	RUM	16	1000	210.0	185.0	35.0
LMH0044SQE/NOPB	WQFN	RUM	16	250	210.0	185.0	35.0

RUM0016A

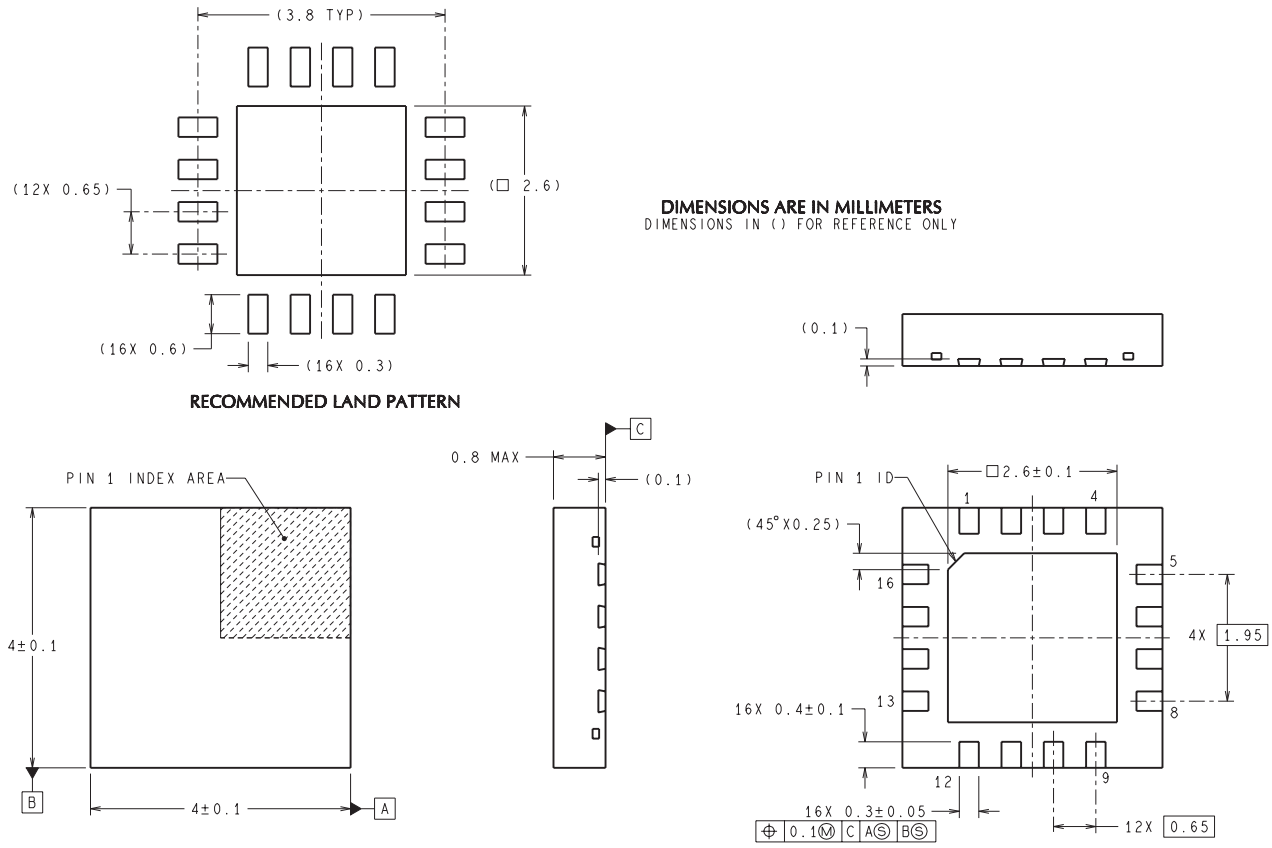

SQB16A (Rev A)

IMPORTANT NOTICE AND DISCLAIMER

TI PROVIDES TECHNICAL AND RELIABILITY DATA (INCLUDING DATASHEETS), DESIGN RESOURCES (INCLUDING REFERENCE DESIGNS), APPLICATION OR OTHER DESIGN ADVICE, WEB TOOLS, SAFETY INFORMATION, AND OTHER RESOURCES “AS IS” AND WITH ALL FAULTS, AND DISCLAIMS ALL WARRANTIES, EXPRESS AND IMPLIED, INCLUDING WITHOUT LIMITATION ANY IMPLIED WARRANTIES OF MERCHANTABILITY, FITNESS FOR A PARTICULAR PURPOSE OR NON-INFRINGEMENT OF THIRD PARTY INTELLECTUAL PROPERTY RIGHTS.

These resources are intended for skilled developers designing with TI products. You are solely responsible for (1) selecting the appropriate TI products for your application, (2) designing, validating and testing your application, and (3) ensuring your application meets applicable standards, and any other safety, security, or other requirements. These resources are subject to change without notice. TI grants you permission to use these resources only for development of an application that uses the TI products described in the resource. Other reproduction and display of these resources is prohibited. No license is granted to any other TI intellectual property right or to any third party intellectual property right. TI disclaims responsibility for, and you will fully indemnify TI and its representatives against, any claims, damages, costs, losses, and liabilities arising out of your use of these resources.

TI’s products are provided subject to TI’s Terms of Sale (www.ti.com/legal/termsofsale.html) or other applicable terms available either on ti.com or provided in conjunction with such TI products. TI’s provision of these resources does not expand or otherwise alter TI’s applicable warranties or warranty disclaimers for TI products.

Mailing Address: Texas Instruments, Post Office Box 655303, Dallas, Texas 75265
Copyright © 2020, Texas Instruments Incorporated