- **Output Ports Have Equivalent 25-Ω Series Resistors, So No External Resistors Are Required**
- **ESD Protection Exceeds 2000 V Per MIL-STD-883, Method 3015; Exceeds 200 V Using Machine Model (C = 200 pF, R = 0)**
- **Latch-Up Performance Exceeds 500 mA Per JEDEC Standard JESD-17**
- **State-of-the-Art *EPIC*-II*B*™ BiCMOS Design Significantly Reduces Power Dissipation**
- **Typical V_{OLP} (Output Ground Bounce) < 1 V at V_{CC} = 5 V, T_A = 25°C**
- **High-Impedance State During Power Up and Power Down**
- **Package Options Include Plastic Small-Outline (DW), Shrink Small-Outline (DB), and Thin Shrink Small-Outline (PW) Packages, Ceramic Chip Carriers (FK), Plastic (N) and Ceramic (J) DIPs, and Ceramic Flat (W) Packages**

SN54ABT2244A . . . J OR W PACKAGE
SN74ABT2244A . . . DB, DW, N, OR PW PACKAGE
(TOP VIEW)

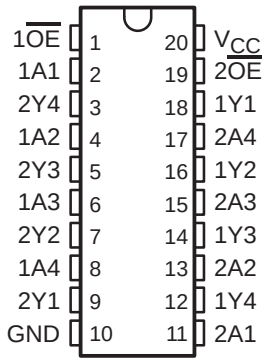

SN54ABT2244A . . . FK PACKAGE
(TOP VIEW)

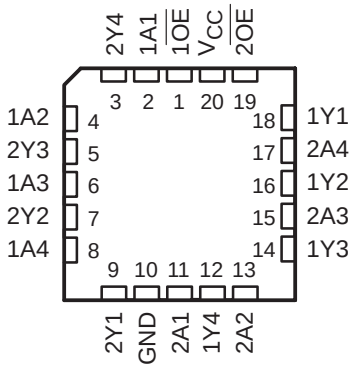

description

These octal buffers and line drivers are designed specifically to improve both the performance and density of 3-state memory address drivers, clock drivers, and bus-oriented receivers and transmitters. Together with the SN54ABT2240, SN74ABT2240A, and ’ABT2241, these devices provide the choice of selected combinations of inverting and noninverting outputs, symmetrical active-low output-enable ($\overline{OE}$) inputs, and complementary OE and $\overline{OE}$ inputs. These devices feature high fan-out and improved fan-in.

The outputs, which are designed to sink up to 12 mA, include equivalent 25-Ω series resistors to reduce overshoot and undershoot.

When V_{CC} is between 0 and 2.1 V, the device is in the high-impedance state during power up or power down. However, to ensure the high-impedance state above 2.1 V, $\overline{OE}$ should be tied to V_{CC} through a pullup resistor; the minimum value of the resistor is determined by the current-sinking capability of the driver.

The SN54ABT2244A is characterized for operation over the full military temperature range of –55°C to 125°C. The SN74ABT2244A is characterized for operation from –40°C to 85°C.

Please be aware that an important notice concerning availability, standard warranty, and use in critical applications of Texas Instruments semiconductor products and disclaimers thereto appears at the end of this data sheet.

EPIC-IIB is a trademark of Texas Instruments Incorporated.

PRODUCTION DATA information is current as of publication date. Products conform to specifications per the terms of Texas Instruments standard warranty. Production processing does not necessarily include testing of all parameters.

Copyright © 1997, Texas Instruments Incorporated

FUNCTION TABLE
(each buffer)

INPUTS		OUTPUT
$\overline{OE}$	A	Y
L	H	H
L	L	L
H	X	Z

logic symbol†

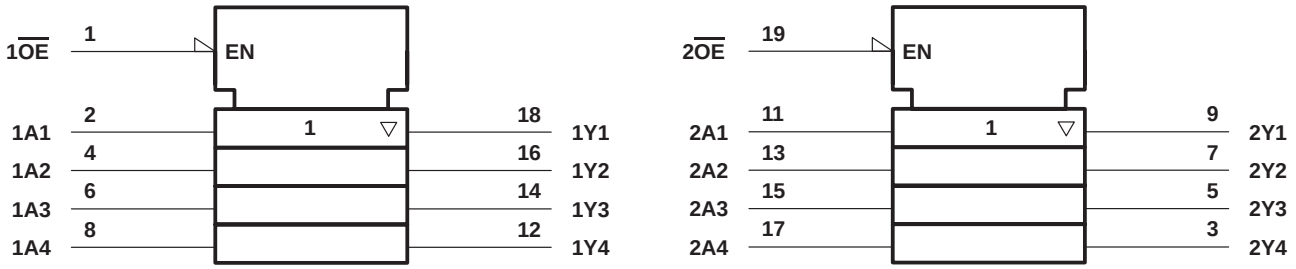

† This symbol is in accordance with ANSI/IEEE Std 91-1984 and IEC Publication 617-12.

logic diagram (positive logic)

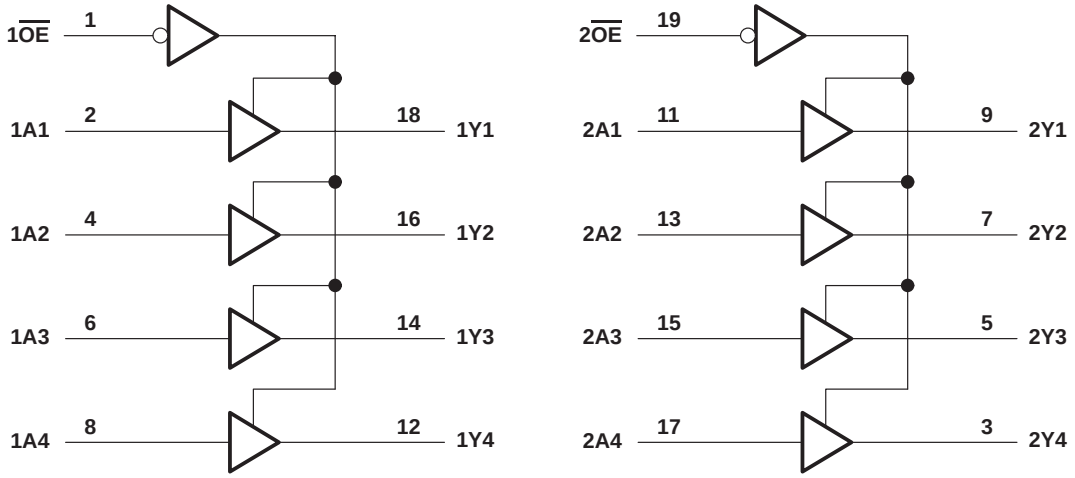

schematic of Y outputs

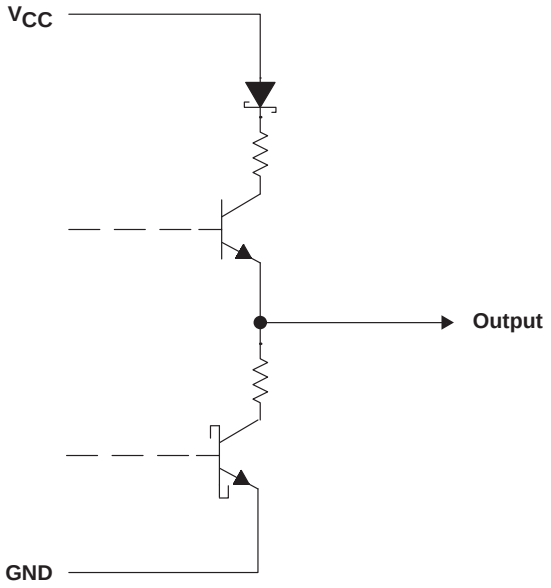

absolute maximum ratings over operating free-air temperature range (unless otherwise noted)†

Supply voltage range, V_{CC}	–0.5 V to 7 V
Input voltage range, V_I (see Note 1)	–0.5 V to 7 V
Voltage range applied to any output in the high or power-off state, V_O	–0.5 V to 5.5 V
Current into any output in the low state, I_O	30 mA
Input clamp current, I_{IK} ($V_I < 0$)	–18 mA
Output clamp current, I_{OK} ($V_O < 0$)	–50 mA
Package thermal impedance, θ_{JA} (see Note 2): DB package	115°C/W
DW package	97°C/W
N package	67°C/W
PW package	128°C/W
Storage temperature range, T_{stg}	–65°C to 150°C

† Stresses beyond those listed under “absolute maximum ratings” may cause permanent damage to the device. These are stress ratings only, and functional operation of the device at these or any other conditions beyond those indicated under “recommended operating conditions” is not implied. Exposure to absolute-maximum-rated conditions for extended periods may affect device reliability.

NOTES: 1. The input and output negative-voltage ratings may be exceeded if the input and output clamp-current ratings are observed.
2. The package thermal impedance is calculated in accordance with EIA/JEDEC Std JESD51, except for through-hole packages, which use a trace length of zero.

recommended operating conditions (see Note 3)

			SN54ABT2244A		SN74ABT2244A		UNIT
			MIN	MAX	MIN	MAX	
V_{CC}	Supply voltage		4.5	5.5	4.5	5.5	V
V_{IH}	High-level input voltage		2		2		V
V_{IL}	Low-level input voltage			0.8		0.8	V
V_I	Input voltage		0	V_{CC}	0	V_{CC}	V
I_{OH}	High-level output current			–24		–32	mA
I_{OL}	Low-level output current			12		12	mA
$\Delta t/\Delta v$	Input transition rise or fall rate	Outputs enabled		5		5	ns/V
$\Delta t/\Delta V_{CC}$	Power-up ramp rate		200		200		µs/V
T_A	Operating free-air temperature		–55	125	–40	85	°C

NOTE 3: Unused inputs must be held high or low to prevent them from floating.

electrical characteristics over recommended operating free-air temperature range (unless otherwise noted)

PARAMETER		TEST CONDITIONS		$T_A = 25°C$			SN54ABT2244A		SN74ABT2244A		UNIT
				MIN	TYP†	MAX	MIN	MAX	MIN	MAX	
V_{IK}		V_{CC} = 4.5 V,	I_I = –18 mA			–1.2		–1.2		–1.2	V
V_{OH}		V_{CC} = 4.5 V,	I_{OH} = –3 mA	2.5			2.5		2.5		V
		V_{CC} = 5 V,	I_{OH} = –3 mA	3			3		3		
		V_{CC} = 4.5 V	I_{OH} = –24 mA	2			2				
			I_{OH} = –32 mA	2*					2		
V_{OL}		V_{CC} = 4.5 V,	I_{OL} = 12 mA			0.8		0.8		0.8	V
V_{hys}					100						mV
I_I		V_{CC} = 5.5 V,	$V_I = V_{CC}$ or GND			±1		±1		±1	µA
I_{OZPU}‡		V_{CC} = 0 to 2.1 V, V_O = 0.5 V to 2.7 V, $\overline{OE}$ = X				±50		±50		±50	µA
I_{OZPD}‡		V_{CC} = 2.1 V to 0, V_O = 0.5 V to 2.7 V, $\overline{OE}$ = X				±50		±50		±50	µA
I_{OZH}		V_{CC} = 2.1 V to 5.5 V, V_O = 2.7 V, $\overline{OE} \geq$ 2 V				10		50		10	µA
I_{OZL}		V_{CC} = 2.1 V to 5.5 V, V_O = 0.5 V, $\overline{OE} \geq$ 2 V				–10		–50		–10	µA
I_{off}		V_{CC} = 0,	V_I or $V_O \leq$ 4.5 V			±100				±100	µA
I_{CEX}		V_{CC} = 5.5 V, V_O = 5.5 V	Outputs high			50		50		50	µA
I_O§		V_{CC} = 5.5 V,	V_O = 2.5 V	–50	–100	–180	–50	–180	–50	–180	mA
I_{CC}		V_{CC} = 5.5 V, I_O = 0, $V_I = V_{CC}$ or GND	Outputs high		1	250		250		250	µA
			Outputs low		24	30		30		30	mA
			Outputs disabled		0.5	250		250		250	µA
ΔI_{CC}¶	Data inputs	V_{CC} = 5.5 V, One input at 3.4 V, Other inputs at V_{CC} or GND	Outputs enabled			1.5		1.5		1.5	mA
			Outputs disabled			0.05		0.05		0.05	
	Control inputs	V_{CC} = 5.5 V, One input at 3.4 V, Other inputs at V_{CC} or GND				1.5		1.5		1.5	
C_i		V_I = 2.5 V or 0.5 V			4						pF
C_o		V_O = 2.5 V or 0.5 V			5.5						pF

* On products compliant to MIL-PRF-38535, this parameter does not apply.
† All typical values are at V_{CC} = 5 V.
‡ This parameter is characterized, but not production tested.
§ Not more than one output should be tested at a time, and the duration of the test should not exceed one second.
¶ This is the increase in supply current for each input that is at the specified TTL voltage level rather than V_{CC} or GND.

switching characteristics over recommended ranges of supply voltage and operating free-air temperature, C_L = 50 pF (unless otherwise noted) (see Figure 1)

PARAMETER	FROM (INPUT)	TO (OUTPUT)	SN54ABT2244A					UNIT
			V_{CC} = 5 V, T_A = 25°C			MIN	MAX	
			MIN	TYP	MAX			
t_{PLH}	A	Y	1	3.4	4.4	1	5.3	ns
t_{PHL}			1	4.5	6.3	1	6.8	
t_{PZH}	$\overline{OE}$	Y	1.1	3.8	5.5	1.1	6.5	ns
t_{PZL}			2.1	6.3	9	2.1	10.2	
t_{PHZ}	$\overline{OE}$	Y	2.1	4.5	6.9	2.1	7	ns
t_{PLZ}			1.7	4.3	6.9	1.7	7.4	

switching characteristics over recommended ranges of supply voltage and operating free-air temperature, C_L = 50 pF (unless otherwise noted) (see Figure 1)

PARAMETER	FROM (INPUT)	TO (OUTPUT)	SN74ABT2244A					UNIT
			V_{CC} = 5 V, T_A = 25°C			MIN	MAX	
			MIN	TYP	MAX			
t_{PLH}	A	Y	1	3.4	4.3	1	4.7	ns
t_{PHL}			1	4.5	5.3	1	5.6	
t_{PZH}	$\overline{OE}$	Y	1.1	3.8	4.8	1.1	5.5	ns
t_{PZL}			2.1	6.3	7.3	2.1	8.3	
t_{PHZ}	$\overline{OE}$	Y	2.1	4.5	5.6	2.1	6.6	ns
t_{PLZ}			1.7	4.3	5.3	1.7	5.8	

PARAMETER MEASUREMENT INFORMATION

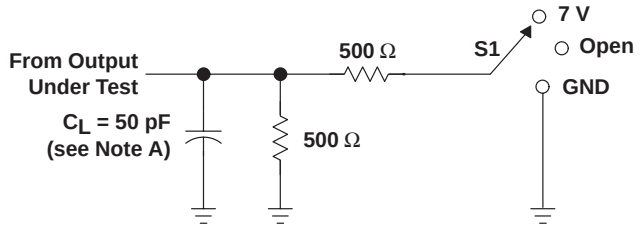

LOAD CIRCUIT

TEST	S1
t_{PLH}/t_{PHL}	Open
t_{PLZ}/t_{PZL}	7 V
t_{PHZ}/t_{PZH}	Open

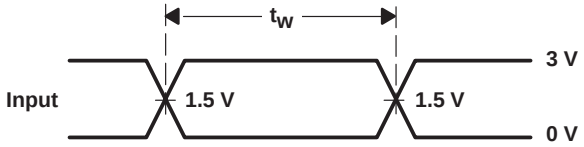

VOLTAGE WAVEFORMS
PULSE DURATION

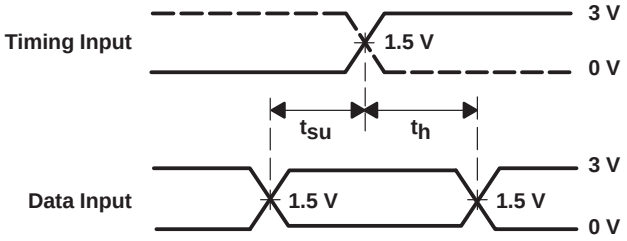

VOLTAGE WAVEFORMS
SETUP AND HOLD TIMES

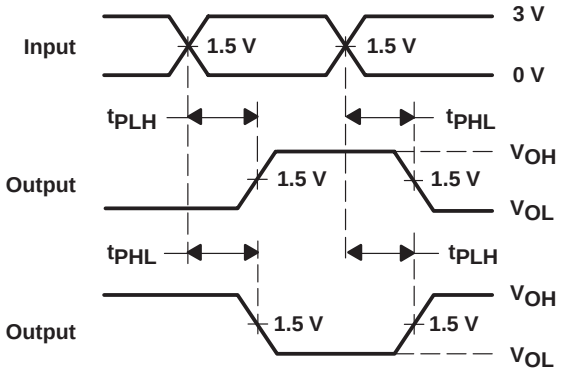

VOLTAGE WAVEFORMS
PROPAGATION DELAY TIMES
INVERTING AND NONINVERTING OUTPUTS

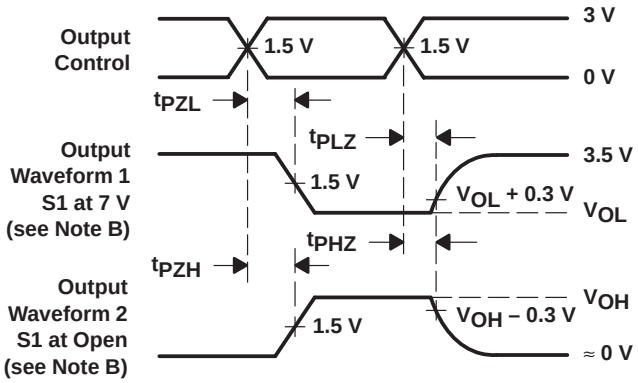

VOLTAGE WAVEFORMS
ENABLE AND DISABLE TIMES
LOW- AND HIGH-LEVEL ENABLING

NOTES: A. C_L includes probe and jig capacitance.
B. Waveform 1 is for an output with internal conditions such that the output is low except when disabled by the output control. Waveform 2 is for an output with internal conditions such that the output is high except when disabled by the output control.
C. All input pulses are supplied by generators having the following characteristics: PRR ≤ 10 MHz, Z_O = 50 Ω, t_r ≤ 2.5 ns, t_f ≤ 2.5 ns.
D. The outputs are measured one at a time with one transition per measurement.

Figure 1. Load Circuit and Voltage Waveforms

PACKAGING INFORMATION

Orderable Device	Status (1)	Package Type	Package Drawing	Pins	Package Qty	Eco Plan (2)	Lead/Ball Finish (6)	MSL Peak Temp (3)	Op Temp (°C)	Device Marking (4/5)	Samples
SN74ABT2244ADBR	ACTIVE	SSOP	DB	20	2000	Green (RoHS & no Sb/Br)	NIPDAU	Level-1-260C-UNLIM	-40 to 85	AA244A	Samples
SN74ABT2244ADBRG4	ACTIVE	SSOP	DB	20	2000	Green (RoHS & no Sb/Br)	NIPDAU	Level-1-260C-UNLIM	-40 to 85	AA244A	Samples
SN74ABT2244ADW	ACTIVE	SOIC	DW	20	25	Green (RoHS & no Sb/Br)	NIPDAU	Level-1-260C-UNLIM	-40 to 85	ABT2244A	Samples
SN74ABT2244ADWR	ACTIVE	SOIC	DW	20	2000	Green (RoHS & no Sb/Br)	NIPDAU	Level-1-260C-UNLIM	-40 to 85	ABT2244A	Samples
SN74ABT2244ADWRE4	ACTIVE	SOIC	DW	20	2000	Green (RoHS & no Sb/Br)	NIPDAU	Level-1-260C-UNLIM	-40 to 85	ABT2244A	Samples
SN74ABT2244AN	ACTIVE	PDIP	N	20	20	Pb-Free (RoHS)	NIPDAU	N / A for Pkg Type	-40 to 85	SN74ABT2244AN	Samples
SN74ABT2244ANSR	ACTIVE	SO	NS	20	2000	Green (RoHS & no Sb/Br)	NIPDAU	Level-1-260C-UNLIM	-40 to 85	ABT2244A	Samples
SN74ABT2244ANSRE4	ACTIVE	SO	NS	20	2000	Green (RoHS & no Sb/Br)	NIPDAU	Level-1-260C-UNLIM	-40 to 85	ABT2244A	Samples
SN74ABT2244APW	ACTIVE	TSSOP	PW	20	70	Green (RoHS & no Sb/Br)	NIPDAU	Level-1-260C-UNLIM	-40 to 85	AA244A	Samples
SN74ABT2244APWR	ACTIVE	TSSOP	PW	20	2000	Green (RoHS & no Sb/Br)	NIPDAU	Level-1-260C-UNLIM	-40 to 85	AA244A	Samples

(1) The marketing status values are defined as follows:
ACTIVE: Product device recommended for new designs.
LIFEBUY: TI has announced that the device will be discontinued, and a lifetime-buy period is in effect.
NRND: Not recommended for new designs. Device is in production to support existing customers, but TI does not recommend using this part in a new design.
PREVIEW: Device has been announced but is not in production. Samples may or may not be available.
OBSOLETE: TI has discontinued the production of the device.

(2) **RoHS:** TI defines "RoHS" to mean semiconductor products that are compliant with the current EU RoHS requirements for all 10 RoHS substances, including the requirement that RoHS substance do not exceed 0.1% by weight in homogeneous materials. Where designed to be soldered at high temperatures, "RoHS" products are suitable for use in specified lead-free processes. TI may reference these types of products as "Pb-Free".
RoHS Exempt: TI defines "RoHS Exempt" to mean products that contain lead but are compliant with EU RoHS pursuant to a specific EU RoHS exemption.
Green: TI defines "Green" to mean the content of Chlorine (Cl) and Bromine (Br) based flame retardants meet JS709B low halogen requirements of <=1000ppm threshold. Antimony trioxide based flame retardants must also meet the <=1000ppm threshold requirement.

(3) MSL, Peak Temp. - The Moisture Sensitivity Level rating according to the JEDEC industry standard classifications, and peak solder temperature.

(4) There may be additional marking, which relates to the logo, the lot trace code information, or the environmental category on the device.

(5) Multiple Device Markings will be inside parentheses. Only one Device Marking contained in parentheses and separated by a "~" will appear on a device. If a line is indented then it is a continuation of the previous line and the two combined represent the entire Device Marking for that device.

(6) Lead/Ball Finish - Orderable Devices may have multiple material finish options. Finish options are separated by a vertical ruled line. Lead/Ball Finish values may wrap to two lines if the finish value exceeds the maximum column width.

Important Information and Disclaimer: The information provided on this page represents TI's knowledge and belief as of the date that it is provided. TI bases its knowledge and belief on information provided by third parties, and makes no representation or warranty as to the accuracy of such information. Efforts are underway to better integrate information from third parties. TI has taken and continues to take reasonable steps to provide representative and accurate information but may not have conducted destructive testing or chemical analysis on incoming materials and chemicals. TI and TI suppliers consider certain information to be proprietary, and thus CAS numbers and other limited information may not be available for release.

In no event shall TI's liability arising out of such information exceed the total purchase price of the TI part(s) at issue in this document sold by TI to Customer on an annual basis.

TAPE AND REEL INFORMATION

REEL DIMENSIONS

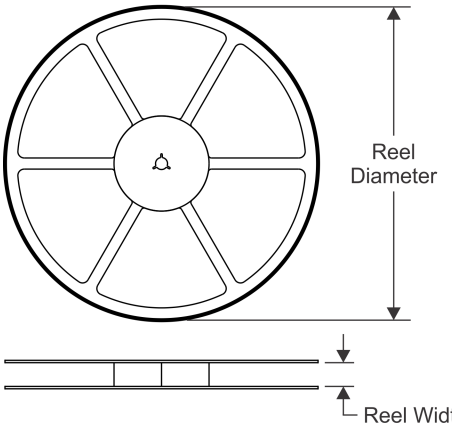

TAPE DIMENSIONS

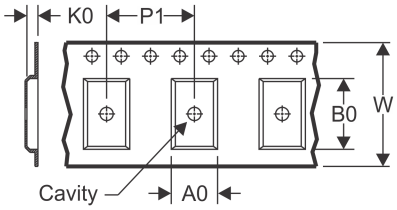

A0	Dimension designed to accommodate the component width
B0	Dimension designed to accommodate the component length
K0	Dimension designed to accommodate the component thickness
W	Overall width of the carrier tape
P1	Pitch between successive cavity centers

QUADRANT ASSIGNMENTS FOR PIN 1 ORIENTATION IN TAPE

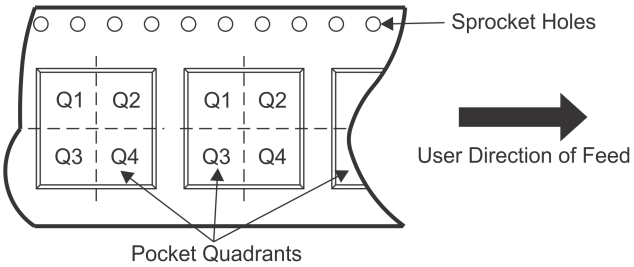

*All dimensions are nominal

Device	Package Type	Package Drawing	Pins	SPQ	Reel Diameter (mm)	Reel Width W1 (mm)	A0 (mm)	B0 (mm)	K0 (mm)	P1 (mm)	W (mm)	Pin1 Quadrant
SN74ABT2244ADBR	SSOP	DB	20	2000	330.0	16.4	8.2	7.5	2.5	12.0	16.0	Q1
SN74ABT2244ADWR	SOIC	DW	20	2000	330.0	24.4	10.8	13.3	2.7	12.0	24.0	Q1
SN74ABT2244ANSR	SO	NS	20	2000	330.0	24.4	8.4	13.0	2.5	12.0	24.0	Q1
SN74ABT2244APWR	TSSOP	PW	20	2000	330.0	16.4	6.95	7.0	1.4	8.0	16.0	Q1

TAPE AND REEL BOX DIMENSIONS

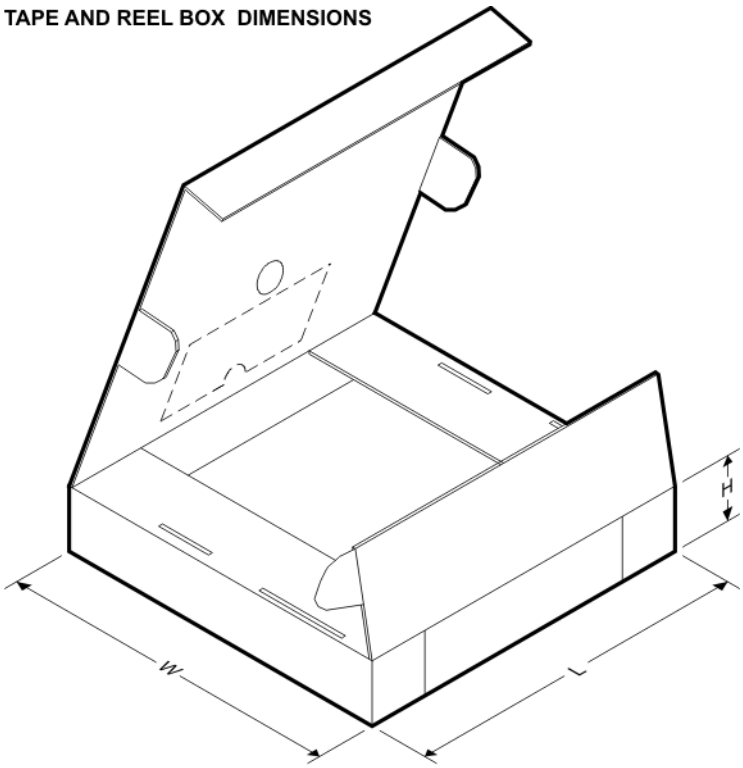

*All dimensions are nominal

Device	Package Type	Package Drawing	Pins	SPQ	Length (mm)	Width (mm)	Height (mm)
SN74ABT2244ADBR	SSOP	DB	20	2000	367.0	367.0	38.0
SN74ABT2244ADWR	SOIC	DW	20	2000	367.0	367.0	45.0
SN74ABT2244ANSR	SO	NS	20	2000	367.0	367.0	45.0
SN74ABT2244APWR	TSSOP	PW	20	2000	367.0	367.0	38.0

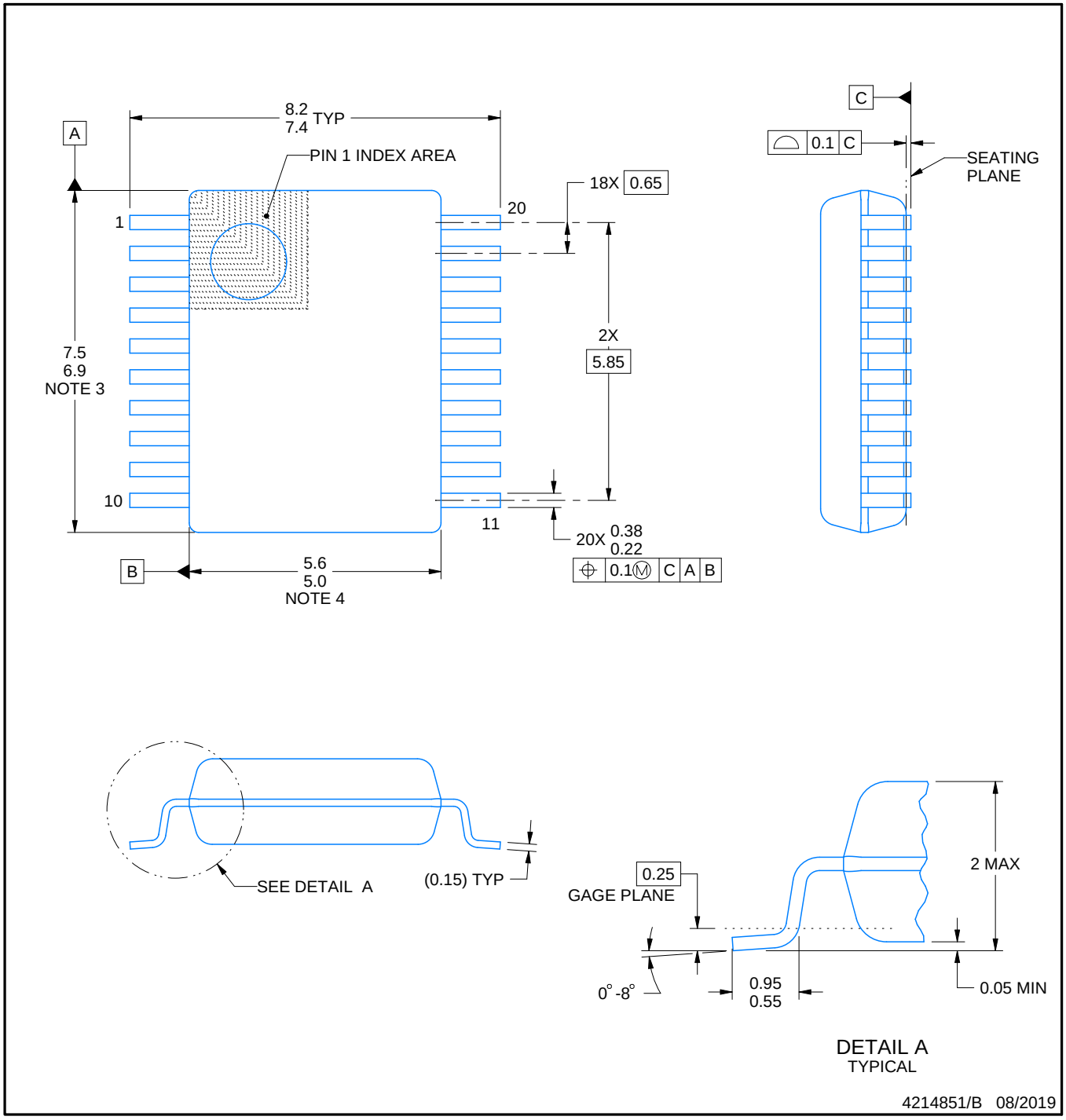

NOTES:

1. All linear dimensions are in millimeters. Any dimensions in parenthesis are for reference only. Dimensioning and tolerancing per ASME Y14.5M.
2. This drawing is subject to change without notice.
3. This dimension does not include mold flash, protrusions, or gate burrs. Mold flash, protrusions, or gate burrs shall not exceed 0.15 mm per side.
4. This dimension does not include interlead flash. Interlead flash shall not exceed 0.25 mm per side.
5. Reference JEDEC registration MO-150.

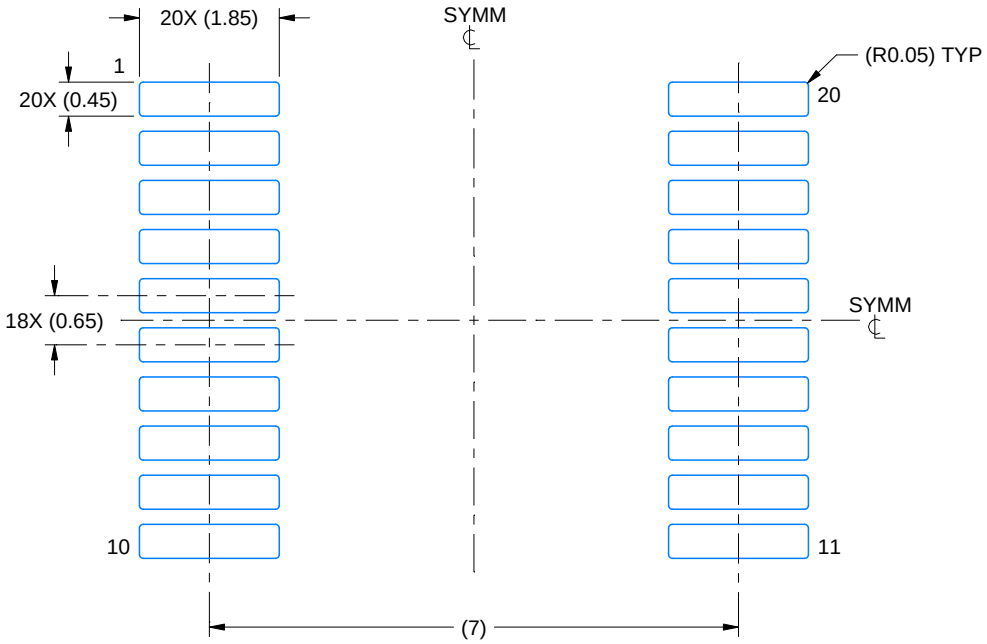

LAND PATTERN EXAMPLE
EXPOSED METAL SHOWN
SCALE: 10X

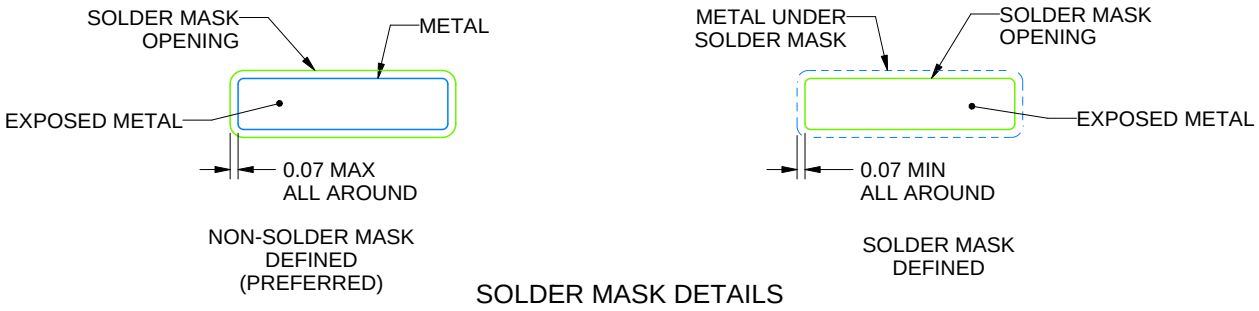

SOLDER MASK DETAILS

4214851/B 08/2019

NOTES: (continued)

6. Publication IPC-7351 may have alternate designs.
7. Solder mask tolerances between and around signal pads can vary based on board fabrication site.

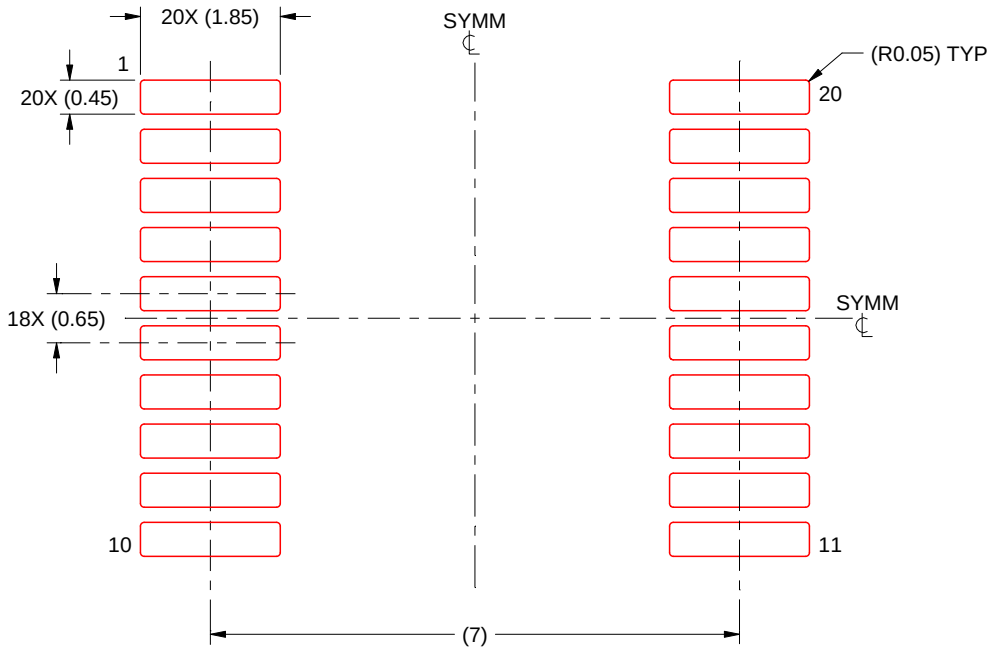

SOLDER PASTE EXAMPLE
BASED ON 0.125 mm THICK STENCIL
SCALE: 10X

4214851/B 08/2019

NOTES: (continued)

8. Laser cutting apertures with trapezoidal walls and rounded corners may offer better paste release. IPC-7525 may have alternate design recommendations.
9. Board assembly site may have different recommendations for stencil design.

MECHANICAL DATA

NS (R-PDSO-G)** **PLASTIC SMALL-OUTLINE PACKAGE**

14-PINS SHOWN

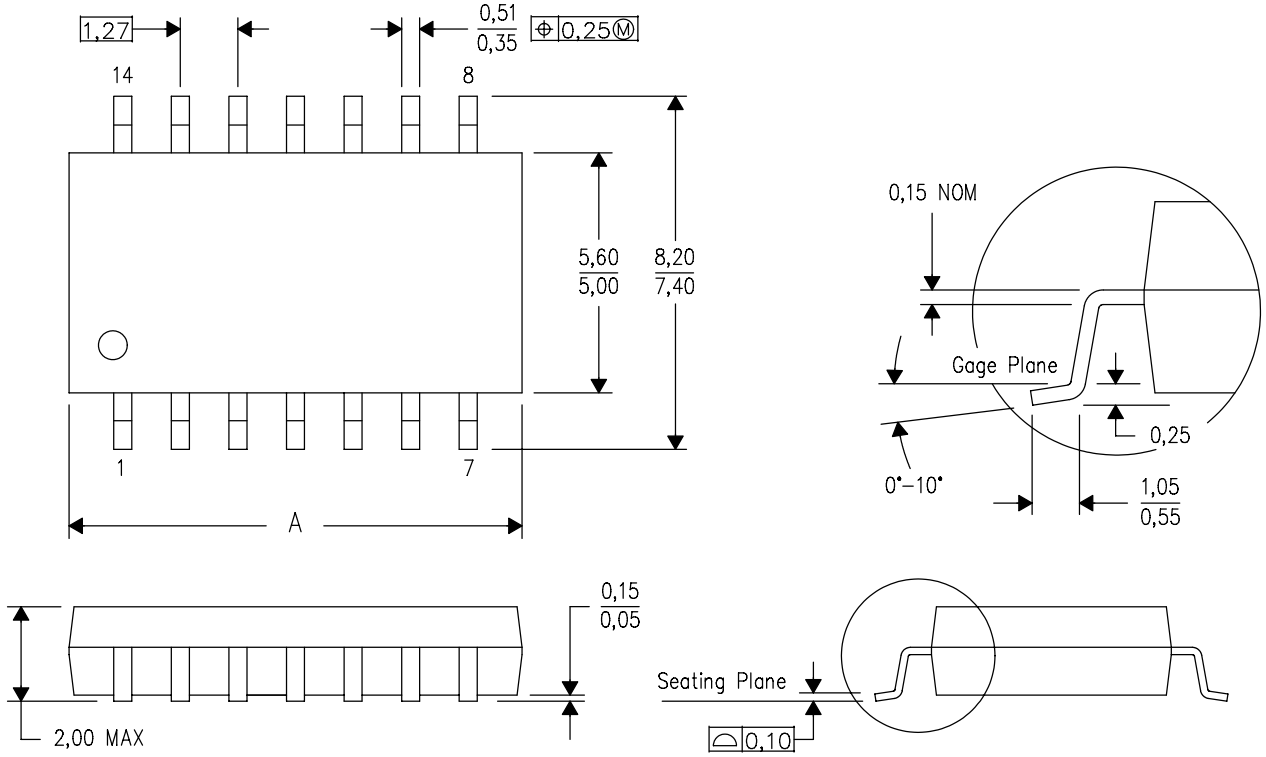

DIM \ PINS **	14	16	20	24
A MAX	10,50	10,50	12,90	15,30
A MIN	9,90	9,90	12,30	14,70

4040062/C 03/03

NOTES:
A. All linear dimensions are in millimeters.
B. This drawing is subject to change without notice.
C. Body dimensions do not include mold flash or protrusion, not to exceed 0,15.

PW (R-PDSO-G20) PLASTIC SMALL OUTLINE

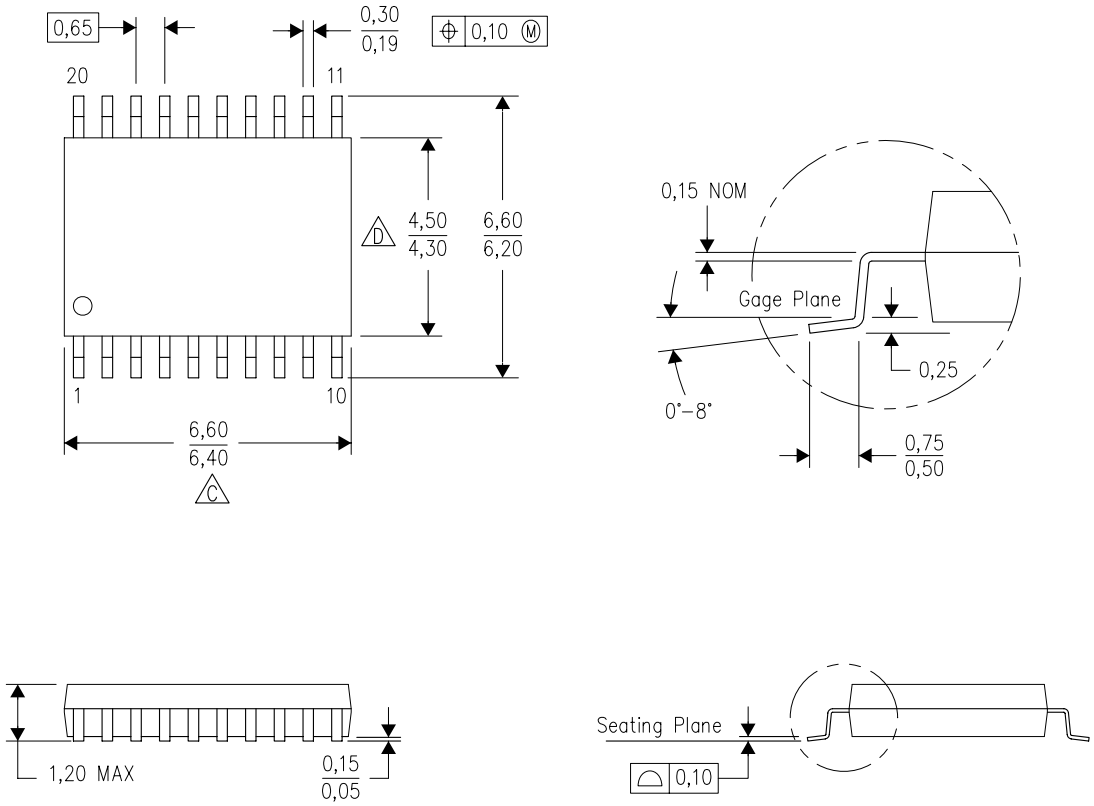

4040064-5/G 02/11

NOTES:
A. All linear dimensions are in millimeters. Dimensioning and tolerancing per ASME Y14.5M-1994.
B. This drawing is subject to change without notice.
C. Body length does not include mold flash, protrusions, or gate burrs. Mold flash, protrusions, or gate burrs shall not exceed 0,15 each side.
D. Body width does not include interlead flash. Interlead flash shall not exceed 0,25 each side.
E. Falls within JEDEC MO-153

PW (R–PDSO–G20) PLASTIC SMALL OUTLINE

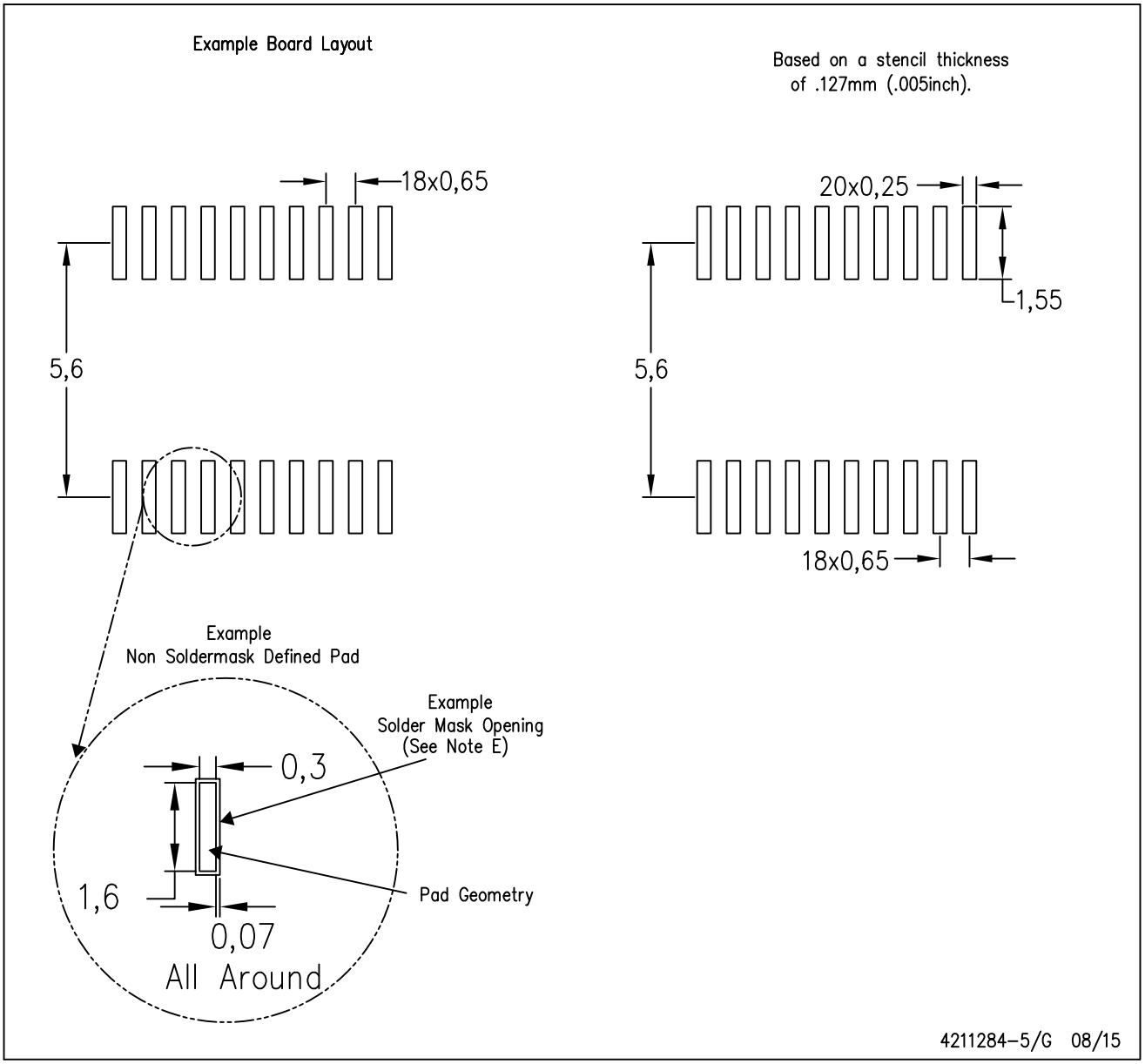

NOTES:
A. All linear dimensions are in millimeters.
B. This drawing is subject to change without notice.
C. Publication IPC–7351 is recommended for alternate design.
D. Laser cutting apertures with trapezoidal walls and also rounding corners will offer better paste release. Customers should contact their board assembly site for stencil design recommendations. Refer to IPC–7525 for other stencil recommendations.
E. Customers should contact their board fabrication site for solder mask tolerances between and around signal pads.

N (R–PDIP–T**) PLASTIC DUAL–IN–LINE PACKAGE

16 PINS SHOWN

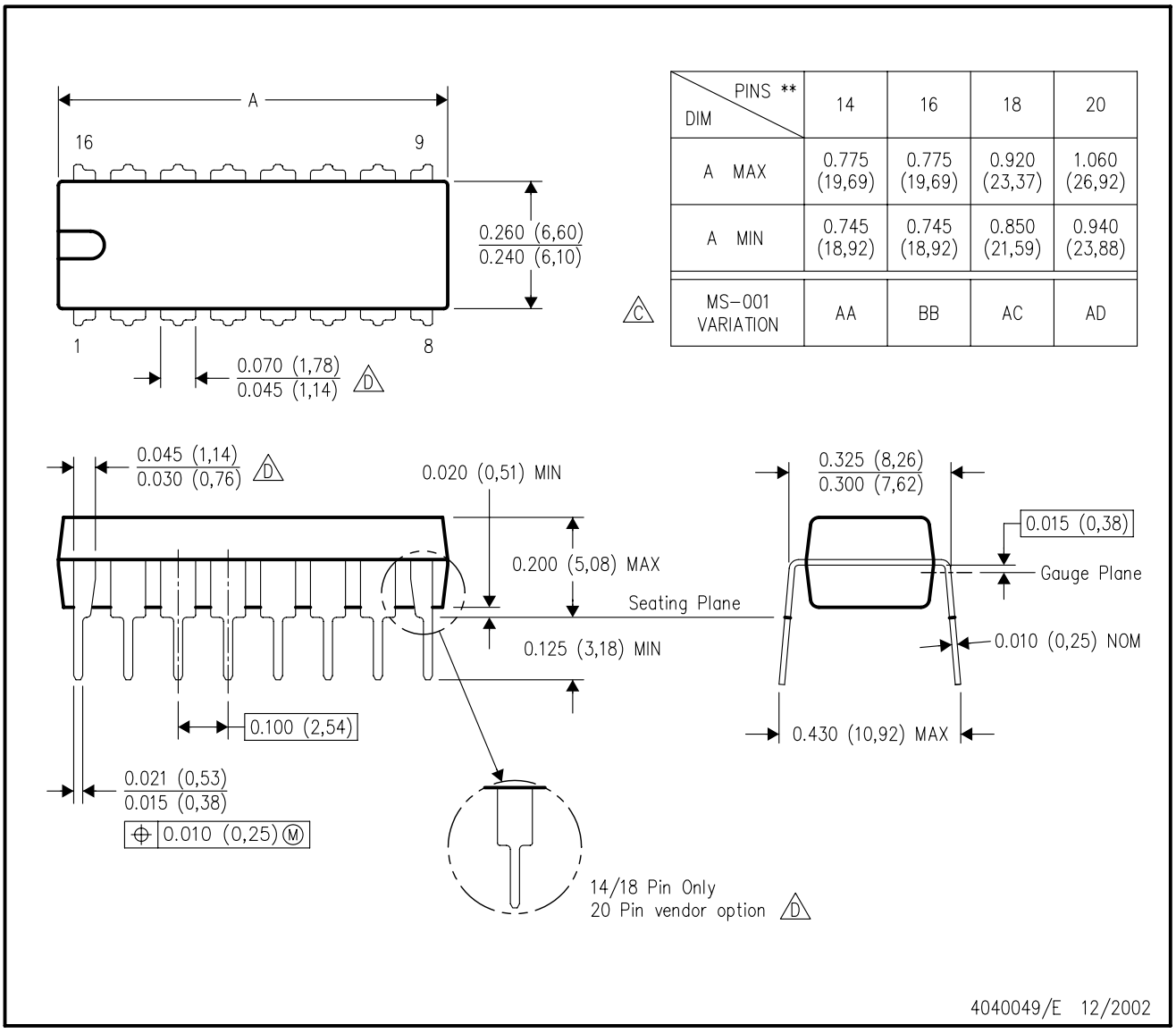

DIM \ PINS **	14	16	18	20
A MAX	0.775 (19,69)	0.775 (19,69)	0.920 (23,37)	1.060 (26,92)
A MIN	0.745 (18,92)	0.745 (18,92)	0.850 (21,59)	0.940 (23,88)
MS–001 VARIATION (C)	AA	BB	AC	AD

NOTES:
A. All linear dimensions are in inches (millimeters).
B. This drawing is subject to change without notice.
C. Falls within JEDEC MS–001, except 18 and 20 pin minimum body length (Dim A).
D. The 20 pin end lead shoulder width is a vendor option, either half or full width.

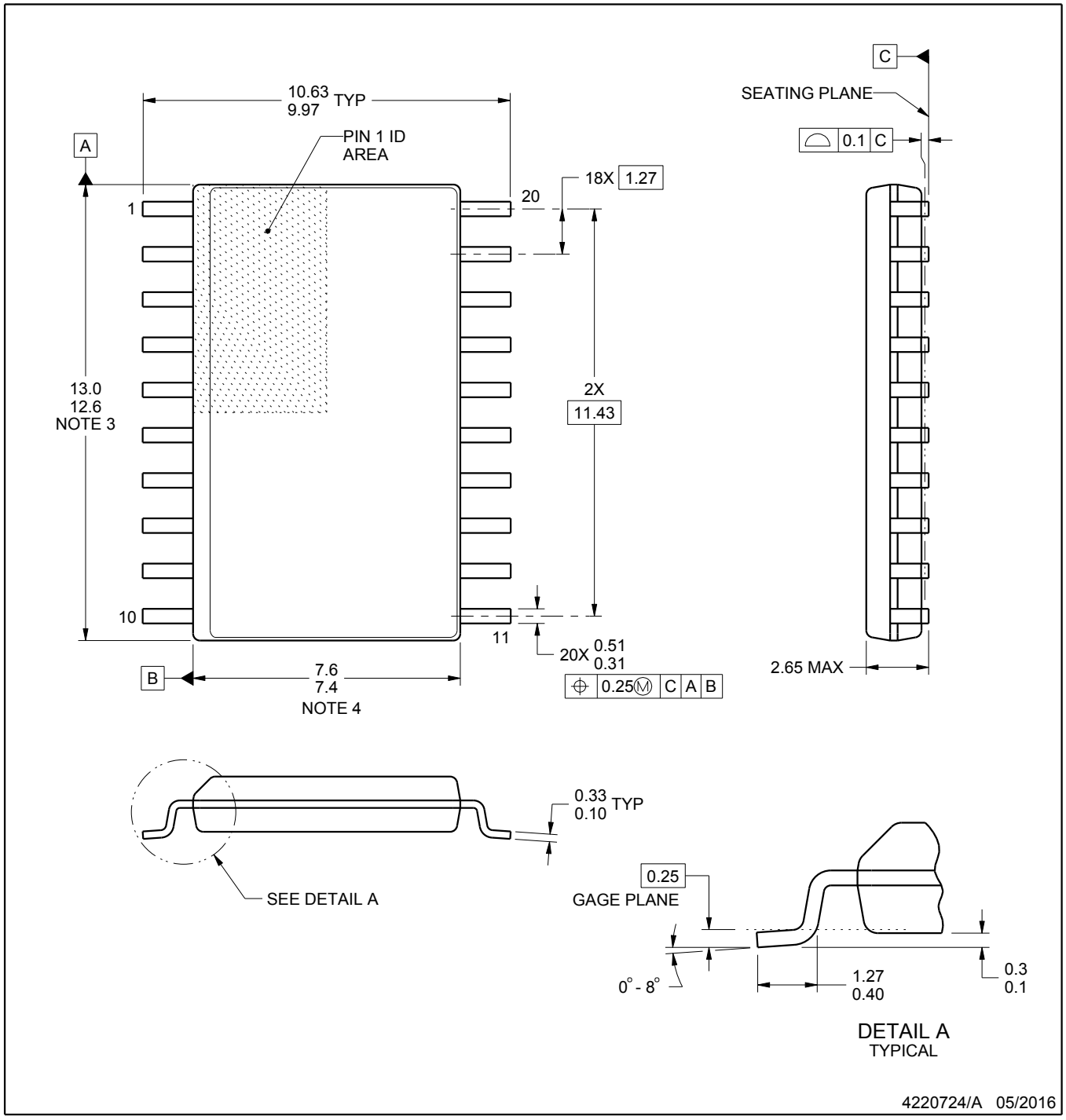

NOTES:

1. All linear dimensions are in millimeters. Dimensions in parenthesis are for reference only. Dimensioning and tolerancing per ASME Y14.5M.
2. This drawing is subject to change without notice.
3. This dimension does not include mold flash, protrusions, or gate burrs. Mold flash, protrusions, or gate burrs shall not exceed 0.15 mm per side.
4. This dimension does not include interlead flash. Interlead flash shall not exceed 0.43 mm per side.
5. Reference JEDEC registration MS-013.

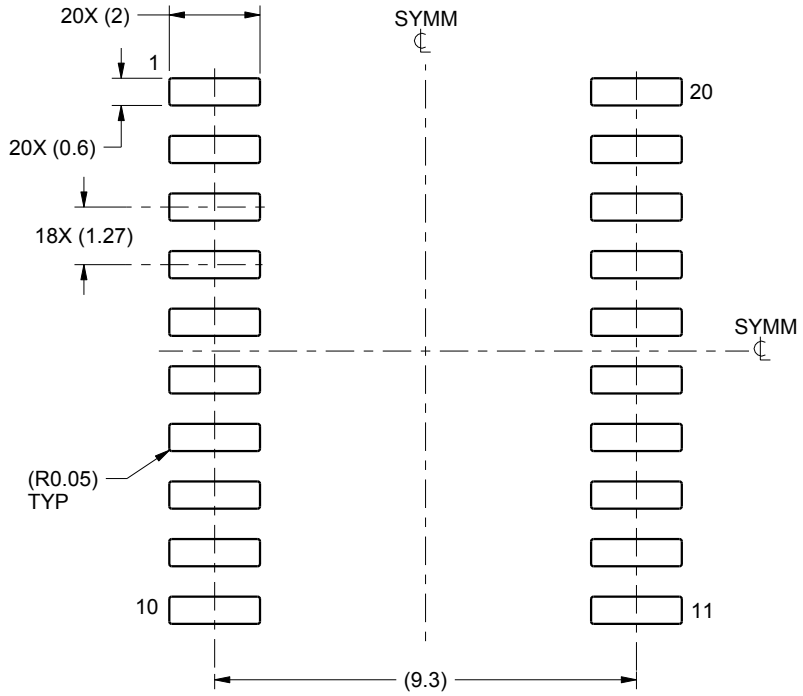

LAND PATTERN EXAMPLE
SCALE:6X

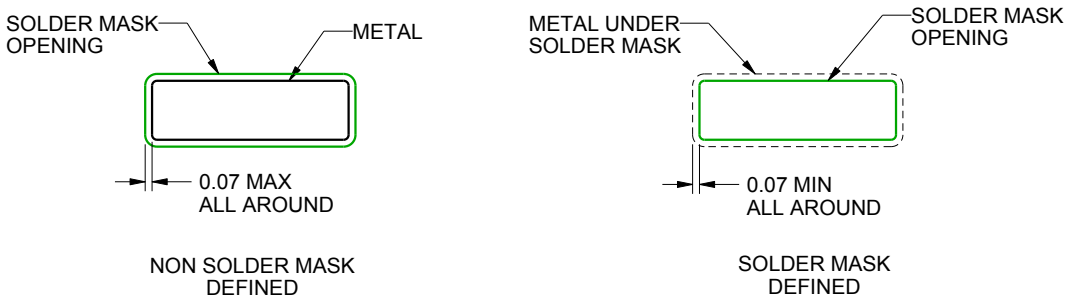

SOLDER MASK DETAILS

4220724/A 05/2016

NOTES: (continued)

6. Publication IPC-7351 may have alternate designs.
7. Solder mask tolerances between and around signal pads can vary based on board fabrication site.

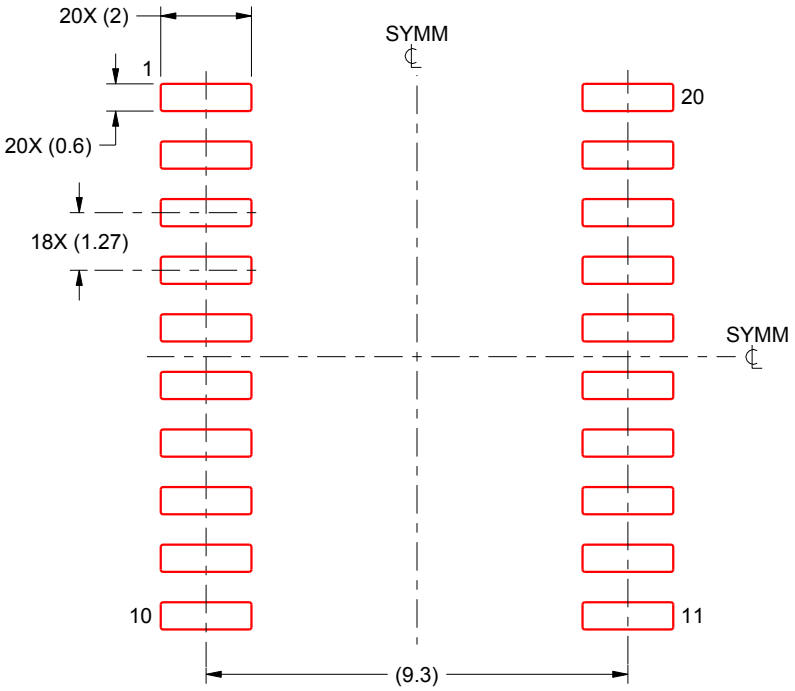

SOLDER PASTE EXAMPLE
BASED ON 0.125 mm THICK STENCIL
SCALE:6X

4220724/A 05/2016

NOTES: (continued)

8. Laser cutting apertures with trapezoidal walls and rounded corners may offer better paste release. IPC-7525 may have alternate design recommendations.
9. Board assembly site may have different recommendations for stencil design.

IMPORTANT NOTICE AND DISCLAIMER

TI PROVIDES TECHNICAL AND RELIABILITY DATA (INCLUDING DATASHEETS), DESIGN RESOURCES (INCLUDING REFERENCE DESIGNS), APPLICATION OR OTHER DESIGN ADVICE, WEB TOOLS, SAFETY INFORMATION, AND OTHER RESOURCES “AS IS” AND WITH ALL FAULTS, AND DISCLAIMS ALL WARRANTIES, EXPRESS AND IMPLIED, INCLUDING WITHOUT LIMITATION ANY IMPLIED WARRANTIES OF MERCHANTABILITY, FITNESS FOR A PARTICULAR PURPOSE OR NON-INFRINGEMENT OF THIRD PARTY INTELLECTUAL PROPERTY RIGHTS.

These resources are intended for skilled developers designing with TI products. You are solely responsible for (1) selecting the appropriate TI products for your application, (2) designing, validating and testing your application, and (3) ensuring your application meets applicable standards, and any other safety, security, or other requirements. These resources are subject to change without notice. TI grants you permission to use these resources only for development of an application that uses the TI products described in the resource. Other reproduction and display of these resources is prohibited. No license is granted to any other TI intellectual property right or to any third party intellectual property right. TI disclaims responsibility for, and you will fully indemnify TI and its representatives against, any claims, damages, costs, losses, and liabilities arising out of your use of these resources.

TI’s products are provided subject to TI’s Terms of Sale (www.ti.com/legal/termsofsale.html) or other applicable terms available either on ti.com or provided in conjunction with such TI products. TI’s provision of these resources does not expand or otherwise alter TI’s applicable warranties or warranty disclaimers for TI products.

Mailing Address: Texas Instruments, Post Office Box 655303, Dallas, Texas 75265
Copyright © 2020, Texas Instruments Incorporated