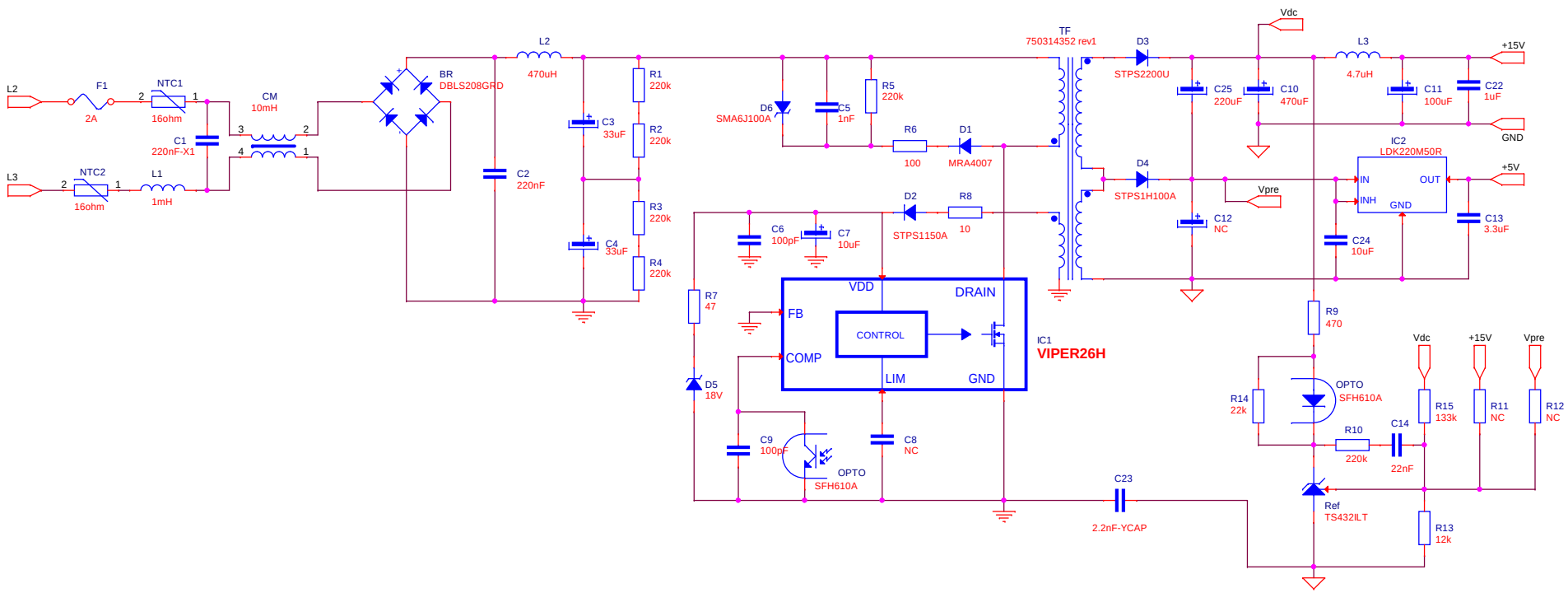


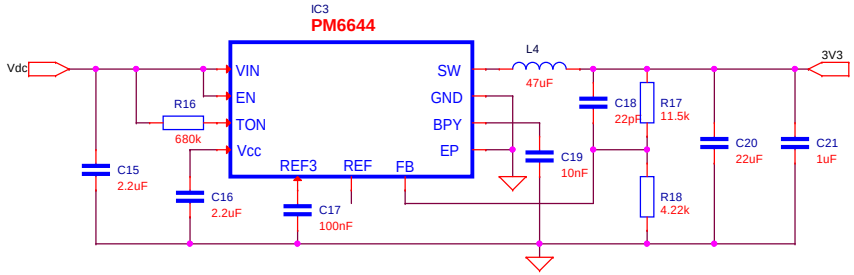


| | | |
|---|---|---|
| Title | <Title> | |
| Size A3 | Document Number <Doc> | Rev <RevCode> |
| Date: Tuesday, November 03, 2015 | Sheet 1 of 1 | |