User's Guide
SCAU034–June 2009

Two/Four Output Low Phase Noise Clock Evaluation Board

Contents

1 Features 2
2 General Description 2
3 Signal Path and Control Circuit 3
4 Software Selectable Options 3
5 Installing the GUI Interface and USB Driver 4
6 TI CDCE62002 Control GUI Interface 4
6.1 Using the EVM GUI 5
7 Configuring the Board 7
8 CDCE62002EVM Board Schematic Diagram 9

List of Figures

1 CDCE62002EVM Evaluation Board 2
2 Input Buffer Properties 5
3 Smart MUX 5
4 Smart MUX 5
5 Loop Filter, Internal Only 6
6 Output Buffer Configuration (each output) 6
7 Tools – Write to EEPROM 7
8 External Loop Filter selection switches 8
9 Control Bus ON/OFF Dip Switches 8

1 Features

- Easy to use Evaluation boards to generate low phase noise clocks between 4.25MHz and 1.175GHz
- Easy device programming via host-powered USB port
- Fast configuration through provided GUI software interface
- Total board power provided either through USB port or separate 3.3V and ground connections
- Single ended or differential input interface or crystal input
- Crystal filter on output readily available for clocking high speed A/D converters

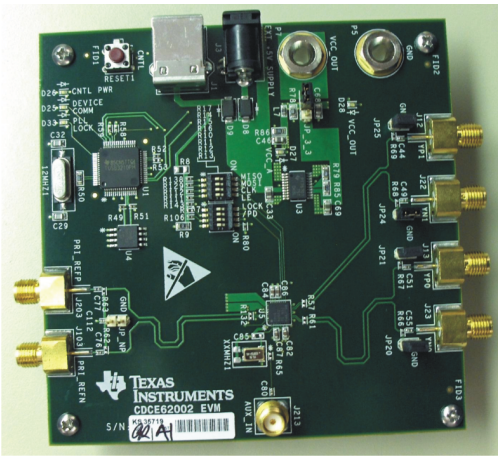

Figure 1. CDCE62002EVM Evaluation Board

2 General Description

The CDCE62002 is a high performance low phase noise frequency synthesizer and jitter cleaner. It has two fully integrated low noise LC based Voltage Control Oscillators (VCOs) which operate in the 1.735GHz – 2.35GHz range. It provides support for two redundant inputs and using its on-chip PLL architecture can provide up to two differential or four single ended low jitter outputs.

The CDCE62002 supports single ended and differential input signals as well as support for an integrated crystal oscillator circuitry that operates in conjunction with an external AT-cut crystal to produce a stable frequency reference for the PLL based frequency synthesizer.

The CDCE62002 can then be programmed through the SPI interface using the EVM programming GUI.

The evaluation module (EVM) is designed to demonstrate the electrical performance of the device. This fully assembled and factory tested evaluation board allows complete validation of all device functions.

For optimum performance, the board is equipped with 50Ω SMA connectors and well-controlled 50Ω impedance microstrip transmission lines.

3 Signal Path and Control Circuit

The CDCE62002 provides support for selectable dual-inputs. One of the inputs is (PRI REF) can accept a 800kHz–500MHz frequency input from a differential signal source or a 800kHz–200MHz frequency input from a single ended signal source. The second input (AUX IN) can support a crystal in the frequency range of 2MHz to 42MHz or a single ended input (LVCMOS) up to 70MHz. The CDCE62002EVM provides support for driving the AUX IN signal from an on-board 5mm x 3.2mm SMD crystal. If the AUX IN is alternately driven by the SMA, the on-board crystal has to be removed and R65 should be populated with a 0Ω resistor.

The CDCE62002 provides support for up to two differential (LVDS or LVPECL) or four single ended (LVCMOS) or any combination of outputs in the range of 10.93MHz to 1.175GHz. The on-chip PLL architecture can be configured such as to enable the device operated either as a jitter cleaner or a frequency synthesizer or both.

The CDCE62002 provides support for either a completely internal loop filter or a partially external loop filter. The loop filter selection will affect the output frequency phase noise and should be considered in conjunction with the type of input used. If the CDCE62002 is to be used only as a frequency synthesizer, the completely internal loop filter option is recommended. If the CDCE62002 is to be used as a jitter cleaner, the partially external loop filter option is recommended.

For any output of the CDCE62002, its frequency is determined through selection of either of the device's on-chip twin VCOs, selection of one of the device's two inputs, the input divider, the prescalar divider, pre-configured internal loop filter settings or external loop filter and output divider, all of which are chosen based on the CDCE62002 data sheet.

Each of the two outputs of the CDCE62002 can be selected through the software interface as a LVPECL or LVDS or LVCMOS signaling level. The CDCE62002EVM provides support for on-board DC termination for the LVPECL outputs through on-board jumper.

In LVCMOS mode the device can achieve up to 250MHz. In LVPECL mode the device can achieve up to 1.175GHz. In LVDS mode, the device can achieve up to 800MHz.

4 Software Selectable Options

The provided GUI software allows users to easily send commands to the CDCE62002 through the host-powered USB interface. The EVM includes a slave USB controller that transmits the commands to the SPI programming interface included on the CDCE62002. The DC power for the USB controller can either be derived out of the 5V power pin in the USB cable or by using an external 5V AC adapter into the slot available on the EVM. If the device is accessible for programming by the SPI programming interface through the USB controller, the on-board LED D25 would be lit on power-up.

In addition to changing configuration to the CDCE62002 SRAM while the board is powered, configuration can also be stored in EEPROM within the CDCE62002. This allows users to start the EVM in the desired state without needing programming at power-up.

Note that the CDCE62002 does have a permanent EEPROM lock mode. After this mode is selected the EEPROM within the CDCE62002 cannot be changed. This is useful when setting final configurations.

The CDCE62002EVM software also supports for the device GUI configurations to be saved into a .INI file, which can be opened up at a later time with this GUI.

5 Installing the GUI Interface and USB Driver

The CDCE62002 EVM Control GUI software requires that a Java Runtime Environment (JRE) to be installed. The latest JRE is available as a free download at http://java.com. Install the JRE first, before attempting to install the CDCE62002EVM GUI. To start the installation of the EVM software, double-click on the file named “CDCE62002EVM installer.msi”.

Note the installation folder as the USB driver must be installed after the setup completes and the USB cable is connected (first time only).

After the setup wizard completes start the GUI interface from the start menu (Start → Texas Instruments Inc → CDCE62002 Software and Driver → CDCE62002).

Connect the USB cable to the EVM. If Windows asks for an appropriate driver, Do not use the automatic search option! Select a manual installation and when prompted for the driver location browse to the CDCE62002EVM program file folder that was used during instillation. If Windows does not ask for a driver, no action is needed.

After USB driver installation the GUI software should connect properly and be ready for use. A green light in the USB Status and SPI Bus Status boxes indicates good USB connection and a red light indicates faulty USB connection or faulty SPI bus.

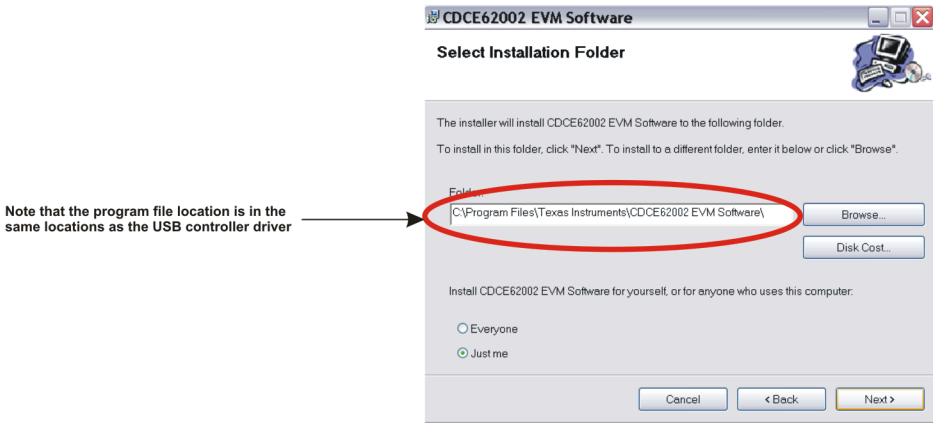

6 TI CDCE62002 Control GUI Interface

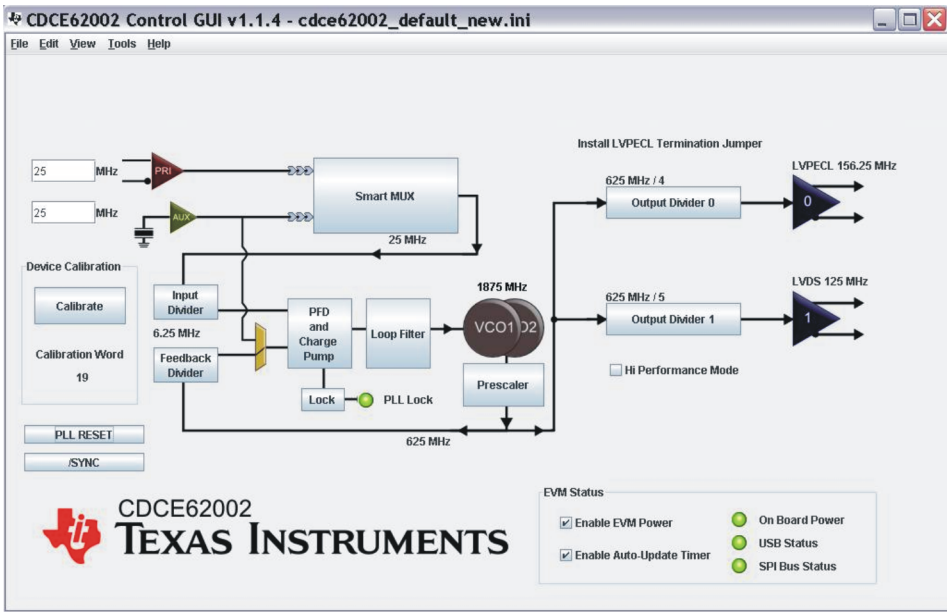

6.1 Using the EVM GUI

The graphical layout of the EVM GUI is based on the functional structure of the CDCE62002. By means of the EVM GUI the user can change the Input Frequency, Input Divider, Input type, Input selection, PFD Charge Pump, Internal/External Loop Filter, Output MUX selection, Output Divider, and Output type. Other configuration settings are selected by the software with user-selectable options as described in the steps below. If the power to the CDCE62002 is derived from the USB, the “Enable EVM Power” check box must be checked. If the power to the CDCE62002 is derived from an external source, the “Enable EVM Power” check box must be unchecked.

Step 1: Primary Reference
The primary reference input buffer section on the GUI can be clicked for a popup window that opens up, as displayed below, showing selections on the external input signal type (differential or single ended), the external signal connection to the CDCE62002 primary inputs (AC or DC termination), input buffer 5K internal termination (enabled or disabled).

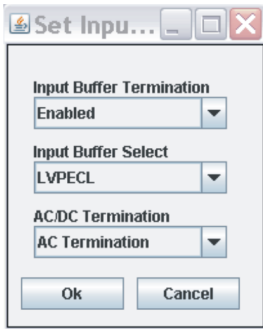

Figure 2. Input Buffer Properties

Step 2: Reference Input Selection through Smart MUX
The Smart MUX section of the GUI can be clicked for a popup window that opens up, as displayed below, showing selections between PRI SEL (Primary Reference Select), AUX SEL (Auxiliary Input Select), or AUTO Select between Primary Reference and Auxiliary Input with a preference to Primary Reference. A Reference divider up to divide by 16 is available for the Primary Reference. In order for the Smart Mux to work correctly in auto Mode the primary reference frequency should after the divider should be within 20% of the frequency of the auxiliary input.

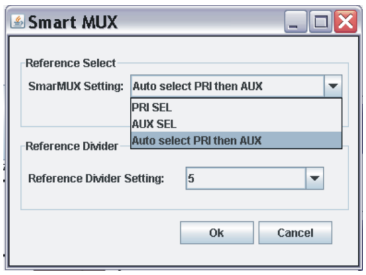

Figure 3. Smart MUX

Step 3: Input Divider Selection and PFD frequency
The Smart MUX section output feeds the input divider block where the signal can be divided up to 256. The input divider output feeds the PFD. The output frequency of the input divider is what referred to is the PFD frequency.

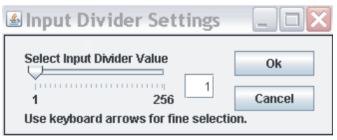

Figure 4. Smart MUX

Step3: Loop Filter Selection and Setup

The Loop Filter section of the GUI can be clicked for a popup window that opens up showing the internal loop filter fixed configuration as displayed below. The values of the resistors and capacitors and the charge pump output current of the internal active loop filter are fixed as displayed in the figure below. The values are optimized for a 30.72MHz PFD frequency.

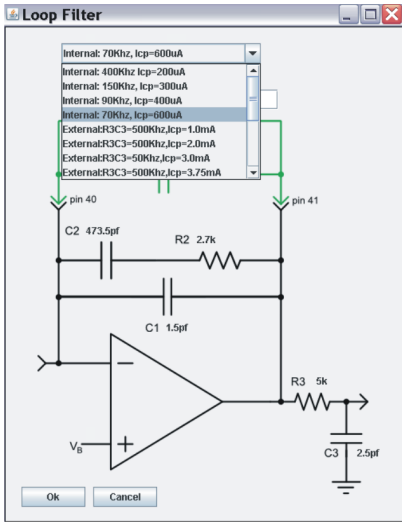

Figure 5. Loop Filter, Internal Only

Alternately, the loop filter can be configured to take external components with preselected charge pump current and high pass filter component. To use External filter, an external loop filter setting from the drop down menu with the desired charge pump current R3C3 values and only a single filter needs to be enabled. Enabling the external preset filters can be achieved by selecting Switch 1,2,3 or 4 on Dip Switches SW9 and SW10 at the back of the CDCE62002EVM. The external loop filter components (C1, R2 and C2) for the loop filter are selected by the Dip Switches and the R3 and C3 are internal to the device.

Step 7: Output Type Selection

The Output buffer section of the GUI for each of the outputs can be clicked for a popup window that opens up, as displayed below, showing selections on each output clock source selectable between LVPECL (in which cases the a jumper needs to be installed to enable a 150Ω termination resistor to ground), LVDS, LVCMOS (in which case each of the P and N act as two separate LVCMOS outputs.

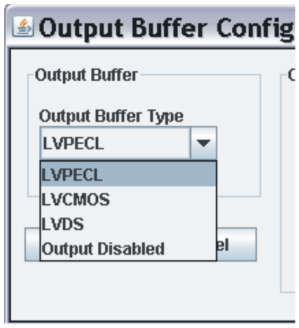

Figure 6. Output Buffer Configuration (each output)

Step 8: PLL Dividers Selection
The input, feedback and prescaler dividers can be selected by clicking on each tab in the GUI which opens up a popup window displaying all the possible selections of those dividers. Care must be taken in choosing these dividers, along with the VCO, charge pump and loop filter, such that the on-chip PLL of the CDCE62002 can operate in a stable closed loop manner. Refer to the CDCE62002 data sheet for further information on appropriate configuration of the PLL for closed loop operation. After the dividers are set accordingly, the PLL LOCK indicator display on the GUI would be lit up in bright green color. Also the on-board LED D33 would be lit to indicate PLL lock. The output dividers for each output can also be chosen from possible selections displayed in the popup window which open up by clicking the output divider tab in the GUI. Each output divider can also be disabled.

Step 9: Write to CDCE62002 EEPROM
To write any particular setting to the EEPROM (locked or unlocked), the menu item at the top of the GUI titled “Tool” must be clicked which would highlight the items “Write EEPROM Unlocked” and “Write EEPROM Locked” as part of a drop-down menu. Choosing the appropriate one after setting the desired PLL configurations would result in writing to the EEPROM in its appropriate mode.

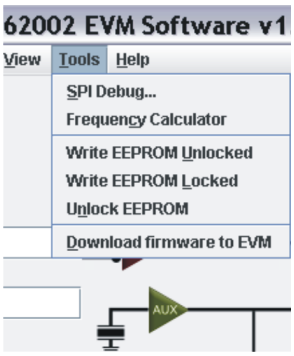

Figure 7. Tools – Write to EEPROM

7 Configuring the Board

The CDCE62002EVM can be powered from the USB power supply or from an external source. The CDCE62002EVM only needs a USB cable attached for programming purposes however for test measurements it is recommended to also use an external 3.3V power supply. Test measurements can also be taken with only the USB supplied power however due to USB power variances results may degrade. It is also possible to program the CDCE62002 and then disconnect the USB cable with minor board configuration changes.

Configuration for Programming and Testing (with USB cable attached) (Default Configuration)
The CDCE62002EVM is configured by default to operate with the USB cable attached and a 3.3V power supply added to EXT VDD and GND. In this configuration the USB microcontroller is powered by the USB port’s 5V supply while the CDCE62002 is powered by the 3.3V external supply. This setup is optimal for programming the CDCE62002 while also taking measurements. This configuration removes the power variation found in USB power supplies by isolating the CDCE62002 from the USB supply.

Configuration for Programming (using USB power)
The CDCE62002EVM can use power supplied through the USB cable as its sole power source. However due to power supply variances in the USB supply this configuration is not recommended for measurements. This setup is for saving configuration settings to the CDCE62002 and later powering the device from its internal memory (useful during performance testing of the device). In this configuration JP_3_3 must be moved from its default position to the new position shown below. Also the “Enable EVM Power” box must be checked on the EVM GUI interface software.

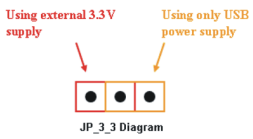

Configuration for On-board Reference Input Biasing

If the CDCE62002 EVM is designed to be used in AC termination with the internal 5K input termination to VBB. The VBB voltage is controlled by the internal register settings. For more information about that VBB voltage refer tot the data sheet.

In case other types of terminations to an external reference needs to be tested on the EVM, some modifications needs to be made on the board to accomplish the measurement. C76, C77, R62, R63 and R130 and the 2 Pin jumper that is feeding C112 can accommodate all possible combinations like LVPECL-AC, LVPECL-DC, LVDS-AC and LVDC-DC terminations.

Configuration for On-board External Loop Filter

If the CDCE62002 is chosen to be operated as a jitter cleaner, it requires use of the partially external loop filter which is located at the back side of the CDCE62002EVM. There are four external loop filter options provided on the EVM. The external loop filter topology is as shown below.

The external loop filter can be chosen by selecting one from the four available options on the CDCE62002EVM using the dip switches, SW9 and SW10, located at the back side of the EVM and shown below.

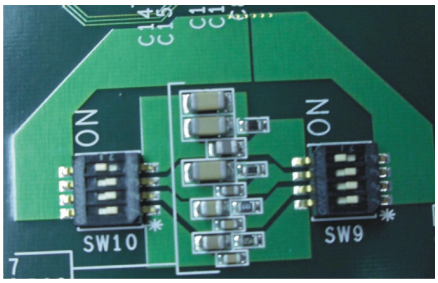

Figure 8. External Loop Filter selection switches

Configuration the Device to Run without the Microcontroller

The CDCE62002EVM allows the user to isolate the device under test (CDCE62002 Device) from the microcontroller that communicates to the device and the GUI. Dip switches, SW1 and SW11, located at the front side of the EVM and shown below engage the microcontroller when they are in the ON position and disengage the microcontroller when they are in the OFF position.

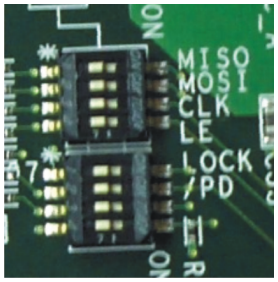

Figure 9. Control Bus ON/OFF Dip Switches

8 CDCE62002EVM Board Schematic Diagram

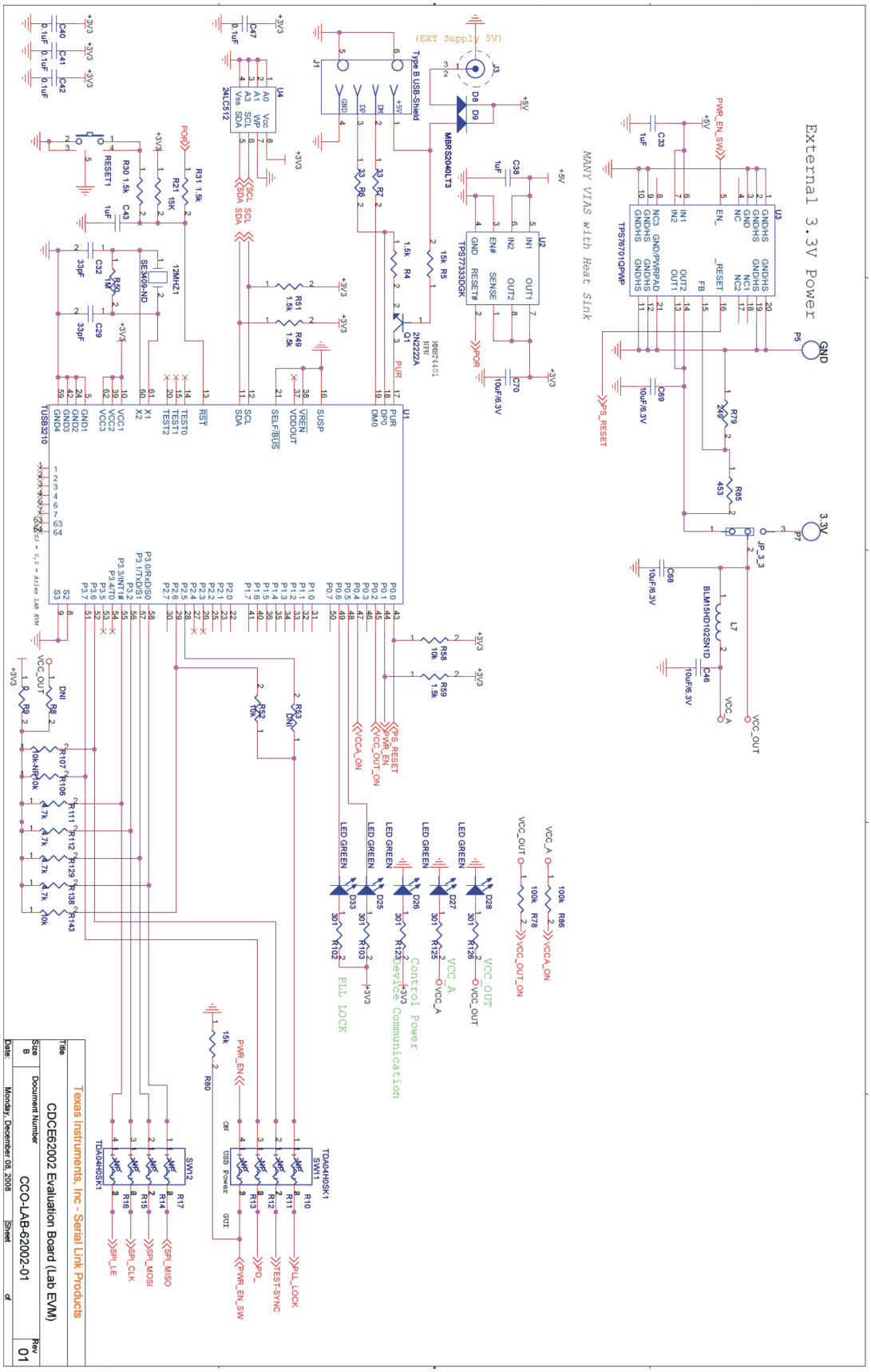

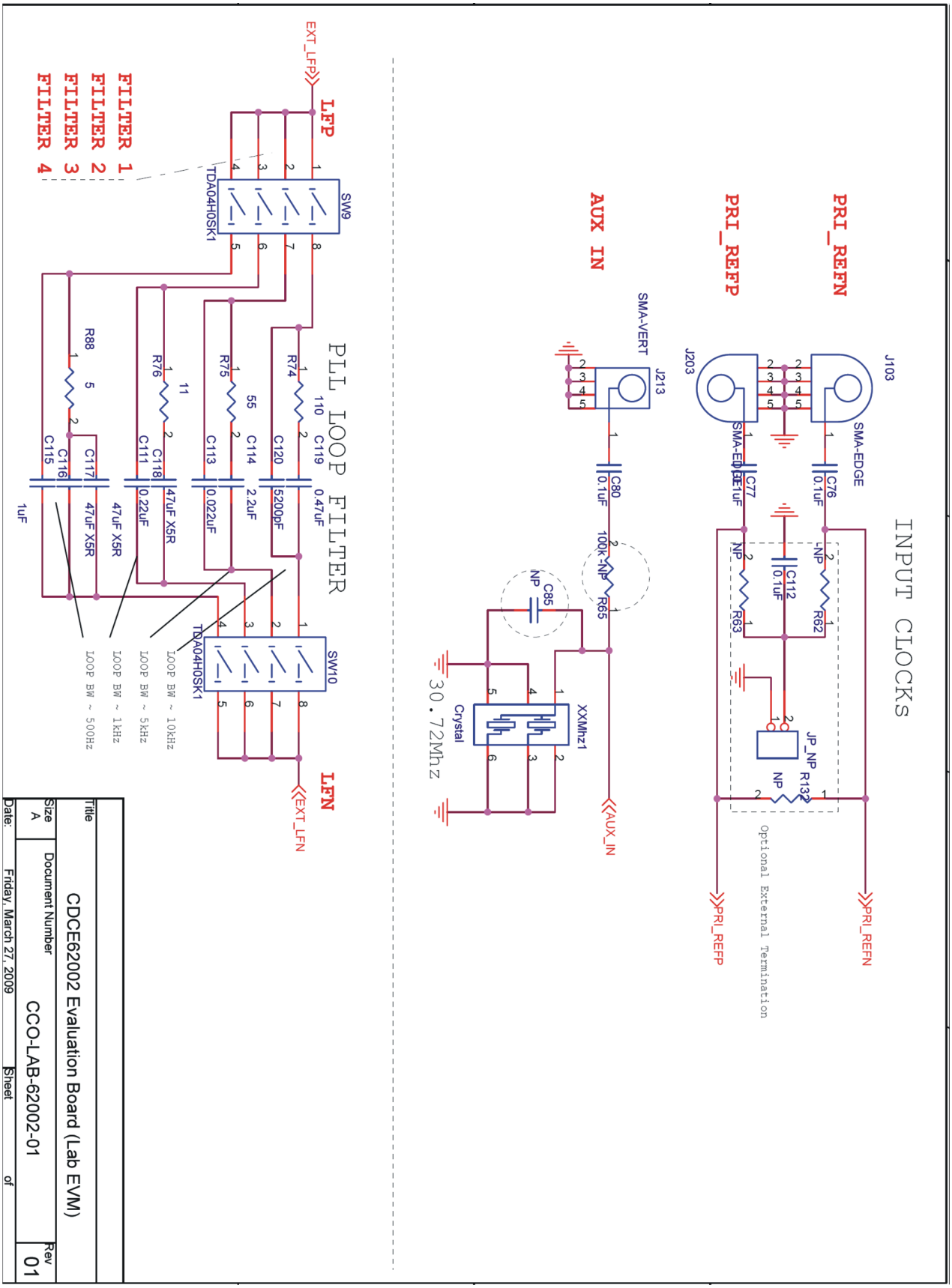
INPUT CLOCKS
PRI_REFN
PRI_REFP
AUX IN
J103
SMA-EDGE
C76
0.1uF
NP
R62
C112
0.1uF
JP_NP
R132
NP
Optional External Termination
J203
SMA-EDGE
C77
0.1uF
NP
R63
J213
SMA-VERT
C80
0.1uF
100k NP
R65
C85
NP
XXMhz1
Crystal
30.72Mhz
AUX_IN
PRI_REFN
PRI_REFP
PLL LOOP FILTER
LFP
LFN
EXT_LFP
EXT_LFN
SW9
SW10
TDA04H0SK1
TDA04H0SK1
FILTER 1
FILTER 2
FILTER 3
FILTER 4
R74
110
C119
0.47uF
C120
5200pF
R75
55
C114
2.2uF
C113
0.022uF
R76
11
C118
47uF X5R
C111
0.22uF
R88
5
C117
47uF X5R
C116
47uF X5R
C115
1uF
LOOP BW ~ 10kHz
LOOP BW ~ 5kHz
LOOP BW ~ 1kHz
LOOP BW ~ 500Hz
Title
CDCE62002 Evaluation Board (Lab EVM)
Size
A
Document Number
CCO-LAB-62002-01
Rev
01
Date:
Friday, March 27, 2009
Sheet
of

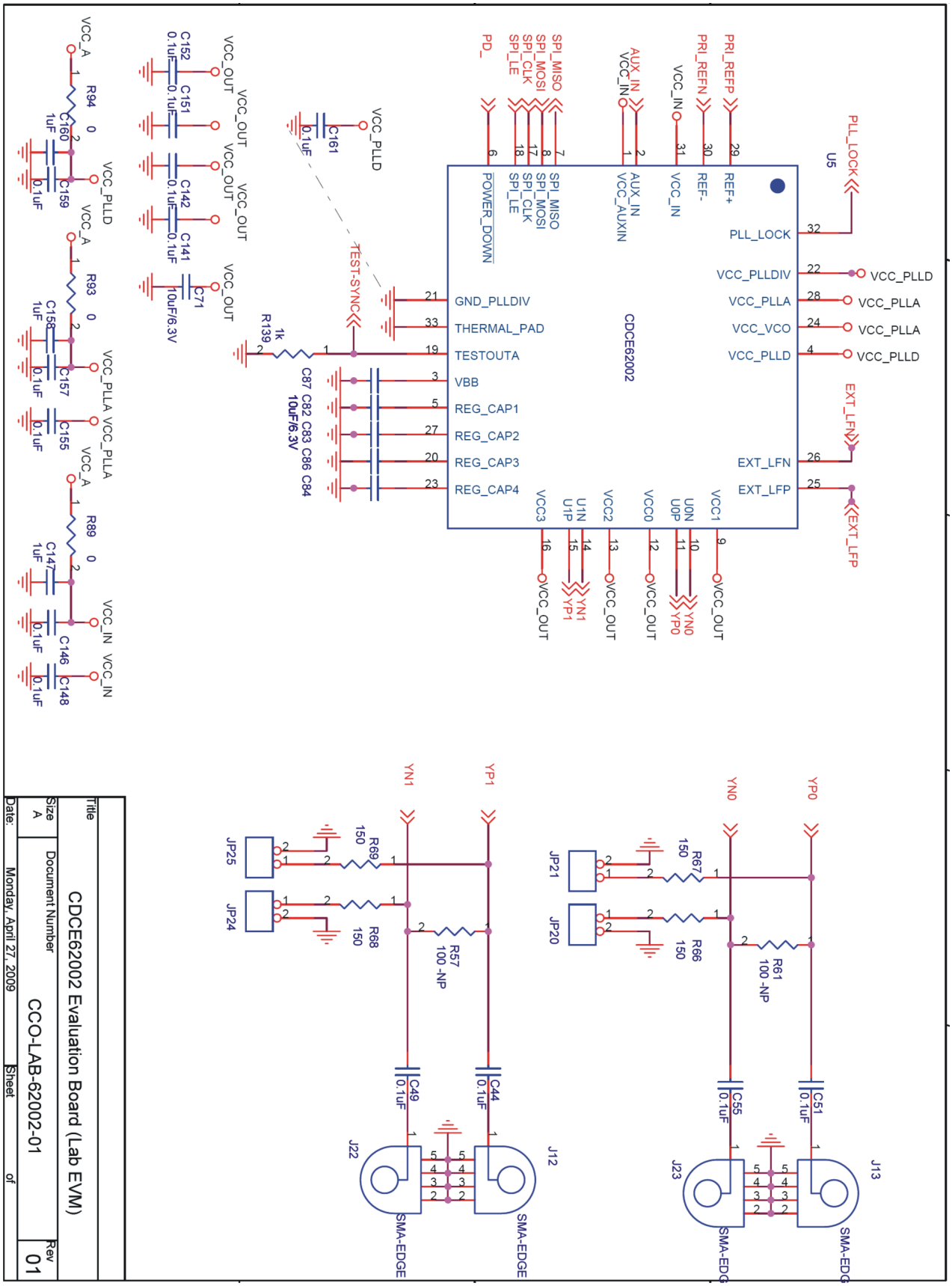
CDCE62002
U5
PLL_LOCK
VCC_PLLDIV
VCC_PLLA
VCC_VCO
VCC_PLLD
EXT_LFN
EXT_LFP
GND_PLLDIV
THERMAL_PAD
TESTOUTA
VBB
REG_CAP1
REG_CAP2
REG_CAP3
REG_CAP4
POWER_DOWN
SPI_MISO
SPI_MOSI
SPI_CLK
SPI_LE
AUX_IN
VCC_AUXIN
VCC_IN
REF+
REF-
PRI_REFP
PRI_REFN
PD_
TEST-SYNC
VCC_OUT
VCC_A
VCC_PLLD
VCC_PLLA
VCC_IN
R94
R93
R89
R139
C87 C82 C83 C86 C84
10uF/6.3V
C152 C151 C142 C141 C71
C161
C160 C159 C158 C157 C155 C147 C146 C148
0.1uF
1uF
R67 R66 R61
R69 R68 R57
150
100 -NP
JP21
JP20
JP25
JP24
C49 C44 C55 C51
J22
J12
J23
J13
SMA-EDGE
Title
CDCE62002 Evaluation Board (Lab EVM)
Size
A
Document Number
CCO-LAB-62002-01
Rev
01
Date:
Monday, April 27, 2009
Sheet
of

IMPORTANT NOTICE

Texas Instruments Incorporated and its subsidiaries (TI) reserve the right to make corrections, modifications, enhancements, improvements, and other changes to its products and services at any time and to discontinue any product or service without notice. Customers should obtain the latest relevant information before placing orders and should verify that such information is current and complete. All products are sold subject to TI's terms and conditions of sale supplied at the time of order acknowledgment.

TI warrants performance of its hardware products to the specifications applicable at the time of sale in accordance with TI's standard warranty. Testing and other quality control techniques are used to the extent TI deems necessary to support this warranty. Except where mandated by government requirements, testing of all parameters of each product is not necessarily performed.

TI assumes no liability for applications assistance or customer product design. Customers are responsible for their products and applications using TI components. To minimize the risks associated with customer products and applications, customers should provide adequate design and operating safeguards.

TI does not warrant or represent that any license, either express or implied, is granted under any TI patent right, copyright, mask work right, or other TI intellectual property right relating to any combination, machine, or process in which TI products or services are used. Information published by TI regarding third-party products or services does not constitute a license from TI to use such products or services or a warranty or endorsement thereof. Use of such information may require a license from a third party under the patents or other intellectual property of the third party, or a license from TI under the patents or other intellectual property of TI.

Reproduction of TI information in TI data books or data sheets is permissible only if reproduction is without alteration and is accompanied by all associated warranties, conditions, limitations, and notices. Reproduction of this information with alteration is an unfair and deceptive business practice. TI is not responsible or liable for such altered documentation. Information of third parties may be subject to additional restrictions.

Resale of TI products or services with statements different from or beyond the parameters stated by TI for that product or service voids all express and any implied warranties for the associated TI product or service and is an unfair and deceptive business practice. TI is not responsible or liable for any such statements.

TI products are not authorized for use in safety-critical applications (such as life support) where a failure of the TI product would reasonably be expected to cause severe personal injury or death, unless officers of the parties have executed an agreement specifically governing such use. Buyers represent that they have all necessary expertise in the safety and regulatory ramifications of their applications, and acknowledge and agree that they are solely responsible for all legal, regulatory and safety-related requirements concerning their products and any use of TI products in such safety-critical applications, notwithstanding any applications-related information or support that may be provided by TI. Further, Buyers must fully indemnify TI and its representatives against any damages arising out of the use of TI products in such safety-critical applications.

TI products are neither designed nor intended for use in military/aerospace applications or environments unless the TI products are specifically designated by TI as military-grade or "enhanced plastic." Only products designated by TI as military-grade meet military specifications. Buyers acknowledge and agree that any such use of TI products which TI has not designated as military-grade is solely at the Buyer's risk, and that they are solely responsible for compliance with all legal and regulatory requirements in connection with such use.

TI products are neither designed nor intended for use in automotive applications or environments unless the specific TI products are designated by TI as compliant with ISO/TS 16949 requirements. Buyers acknowledge and agree that, if they use any non-designated products in automotive applications, TI will not be responsible for any failure to meet such requirements.

Following are URLs where you can obtain information on other Texas Instruments products and application solutions:

Products		**Applications**	
Amplifiers	amplifier.ti.com	Audio	www.ti.com/audio
Data Converters	dataconverter.ti.com	Automotive	www.ti.com/automotive
DLP® Products	www.dlp.com	Broadband	www.ti.com/broadband
DSP	dsp.ti.com	Digital Control	www.ti.com/digitalcontrol
Clocks and Timers	www.ti.com/clocks	Medical	www.ti.com/medical
Interface	interface.ti.com	Military	www.ti.com/military
Logic	logic.ti.com	Optical Networking	www.ti.com/opticalnetwork
Power Mgmt	power.ti.com	Security	www.ti.com/security
Microcontrollers	microcontroller.ti.com	Telephony	www.ti.com/telephony
RFID	www.ti-rfid.com	Video & Imaging	www.ti.com/video
RF/IF and ZigBee® Solutions	www.ti.com/lprf	Wireless	www.ti.com/wireless

Mailing Address: Texas Instruments, Post Office Box 655303, Dallas, Texas 75265
Copyright © 2009, Texas Instruments Incorporated