NOTES: UNLESS OTHERWISE SPECIFIED

1. ALL RESISTORS ARE IN OHMS, 0805.
   ALL CAPACITORS ARE IN MICROFARADS, 0805.

*

ASSY	U1	VCC
-A	LTM2889CY-3	3.0V - 3.6V
-B	LTM2889CY-5	4.5V - 5.5V

REVISION HISTORY

ECO	REV	DESCRIPTION	APPROVED	DATE
-	2	2ND PROTOTYPE	KEITH B.	5-18-15

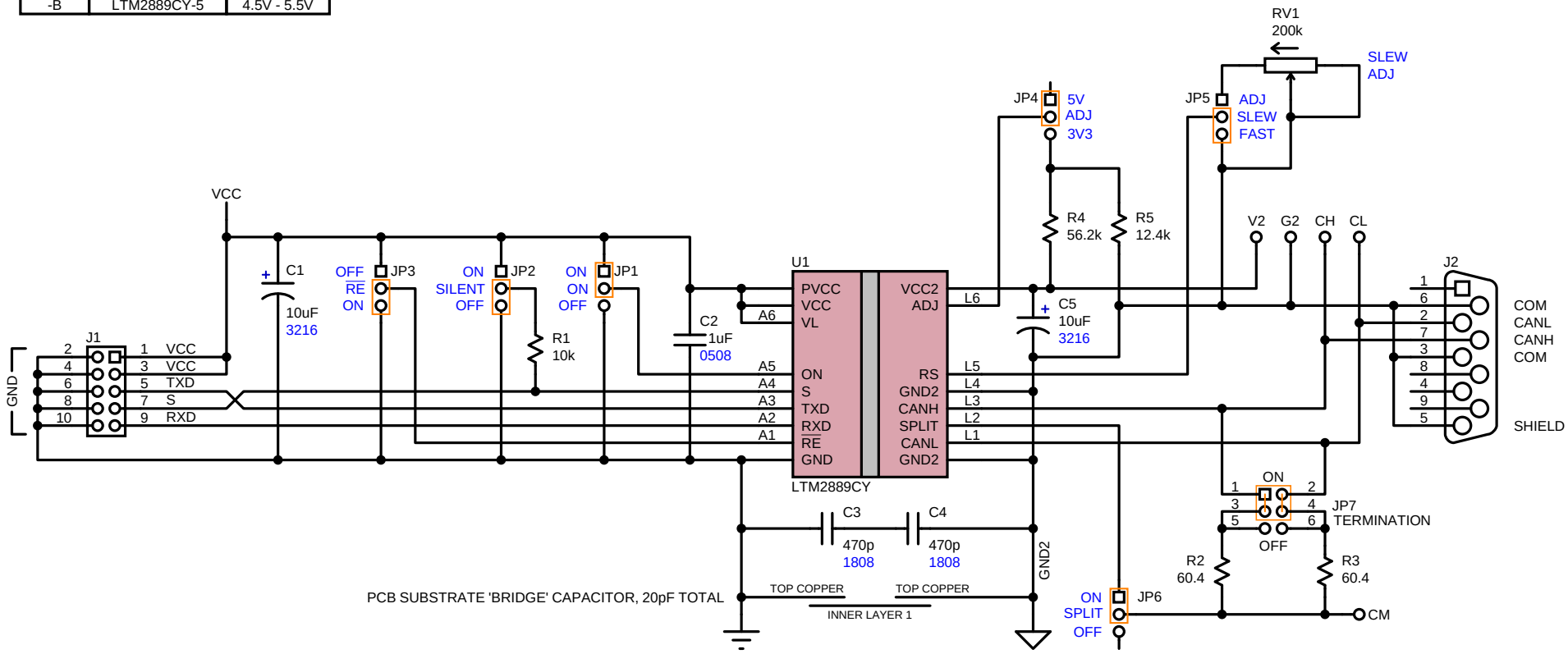

CUSTOMER NOTICE

LINEAR TECHNOLOGY HAS MADE A BEST EFFORT TO DESIGN A CIRCUIT THAT MEETS CUSTOMER - SUPPLIED SPECIFICATIONS; HOWEVER, IT REMAINS THE CUSTOMERS RESPONSIBILITY TO VERIFY PROPER AND RELIABLE OPERATION IN THE ACTUAL APPLICATION. COMPONENT SUBSTITUTION AND PRINTED CIRCUIT LAYOUT MAY SIGNIFICANTLY AFFECT CIRCUIT PERFORMANCE OR RELIABILITY. CONTACT LINEAR TECHNOLOGY APPLICATIONS ENGINEERING FOR ASSISTANCE.

THIS CIRCUIT IS PROPRIETARY TO LINEAR TECHNOLOGY AND SUPPLIED FOR USE WITH LINEAR TECHNOLOGY PARTS.

APPROVALS	
PCB DES.	KEITH B.
APP ENG.	KEITH B.

SCALE = NONE

LINEAR TECHNOLOGY
1630 McCarthy Blvd.
Milpitas, CA 95035
Phone: (408) 432-1900
Fax: (408) 434-0507
www.linear.com

LTC CONFIDENTIAL FOR CUSTOMER USE ONLY

TITLE: SCHEMATIC
CAN uMODULE ISOLATOR, LOW EMI

SIZE: N/A | IC NO.: LTM2889CY-3/-5 DEMO CIRCUIT 1903A | REV.: 2

DATE: Tuesday, May 19, 2015 | SHEET 1 OF 1