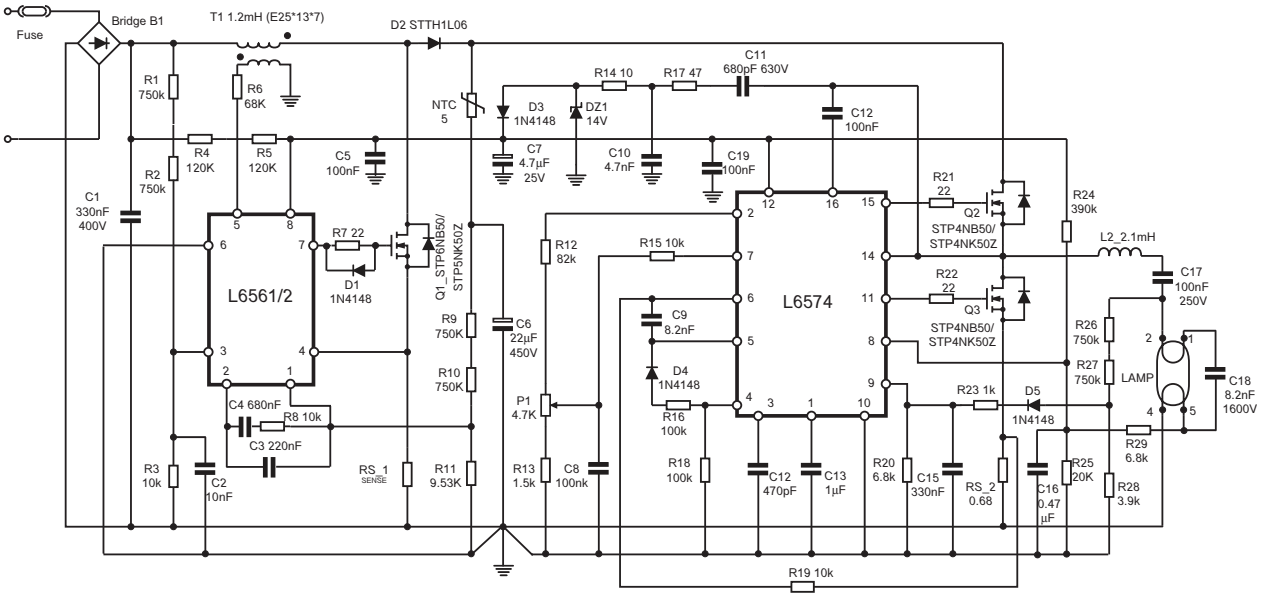
Fuse
Bridge B1
T1 1.2mH (E25*13*7)
D2 STTH1L06
R1 750k
R6 68K
R4 120K
R5 120K
R2 750k
C1 330nF 400V
C5 100nF
NTC 5
D3 1N4148
DZ1 14V
R14 10
R17 47
C11 680pF 630V
C12 100nF
C7 4.7µF 25V
C10 4.7nF
C19 100nF
R21 22
Q2 STP4NB50/ STP4NK50Z
R24 390k
L2_2.1mH
C17 100nF 250V
L6561/2
R7 22
D1 1N4148
Q1_STP6NB50/ STP5NK50Z
R9 750K
R10 750K
C6 22µF 450V
R12 82k
R15 10k
L6574
R22 22
Q3 STP4NB50/ STP4NK50Z
C9 8.2nF
D4 1N4148
R26 750k
R27 750k
LAMP
C18 8.2nF 1600V
C4 680nF
R8 10k
C3 220nF
P1 4.7K
R16 100k
R23 1k
D5 1N4148
R29 6.8k
R3 10k
C2 10nF
RS_1 SENSE
R11 9.53K
R13 1.5k
C8 100nk
R18 100k
C12 470pF
C13 1µF
R20 6.8k
C15 330nF
RS_2 0.68
C16 0.47 µF
R25 20K
R28 3.9k
R19 10k