AMC1306x Small, High-Precision, Reinforced Isolated Delta-Sigma Modulators With High CMTI

1 Features

- Pin-compatible family optimized for shunt-resistor-based current measurements:
  - ±50-mV or ±250-mV input voltage ranges
  - Manchester coded or uncoded bitstream options
- Excellent DC performance:
  - Offset error: ±50 µV or ±100 µV (max)
  - Offset drift: 1 µV/°C (max)
  - Gain error: ±0.2% (max)
  - Gain drift: ±40 ppm/°C (max)
- Transient immunity: 100 kV/µs (typ)
- System-level diagnostic features
- Safety-related certifications:
  - 7000-V_{PEAK} reinforced isolation per DIN VDE V 0884-11: 2017-01
  - 5000-V_{RMS} isolation for 1 minute per UL1577
  - CAN/CSA no. 5A-component acceptance service notice and IEC 62368-1 end equipment standard
- Fully specified over the extended industrial temperature range: –40°C to +125°C

2 Applications

- Shunt-resistor-based current sensing and isolated voltage measurements in:
  - Industrial motor drives
  - Photovoltaic inverters
  - Uninterruptible power supplies

3 Description

The AMC1306 is a precision, delta-sigma (ΔΣ) modulator with the output separated from the input circuitry by a capacitive double isolation barrier that is highly resistant to magnetic interference. This barrier is certified to provide reinforced isolation of up to 7000 V_{PEAK} according to the DIN VDE V 0884-11 and UL1577 standards. Used in conjunction with isolated power supplies, this isolated modulator separates parts of the system that operate on different common-mode voltage levels and protects lower-voltage parts from damage.

The input of the AMC1306 is optimized for direct connection to shunt resistors or other low voltage-level signal sources. The unique low input voltage range of the ±50-mV device allows significant reduction of the power dissipation through the shunt and supports excellent ac and dc performance. The output bitstream of the AMC1306 is Manchester coded (AMC1306Ex) or uncoded (AMC1306Mx), depending on the derivate. By using an integrated digital filter (such as those in the TMS320F2807x or TMS320F2837x microcontroller families) to decimate the bitstream, the device can achieve 16 bits of resolution with a dynamic range of 85 dB at a data rate of 78 kSPS.

The bitstream output of the Manchester coded AMC1306Ex versions support single-wire data and clock transfer without having to consider the setup and hold time requirements of the receiving device.

Device Information(1)

PART NUMBER	PACKAGE	BODY SIZE (NOM)
AMC1306x	SOIC (8)	5.85 mm × 7.50 mm

(1) For all available packages, see the orderable addendum at the end of the datasheet.

Simplified Schematic

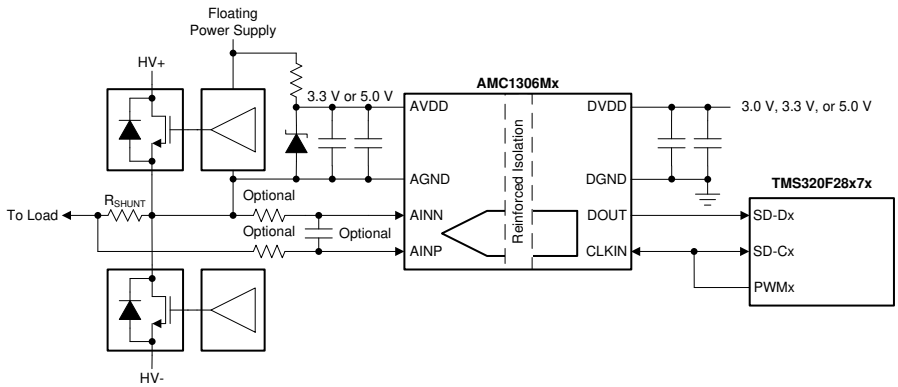

An IMPORTANT NOTICE at the end of this data sheet addresses availability, warranty, changes, use in safety-critical applications, intellectual property matters and other important disclaimers. PRODUCTION DATA.

Table of Contents

1 Features ... 1
2 Applications ... 1
3 Description ... 1
4 Revision History ... 2
5 Device Comparison Table ... 4
6 Pin Configuration and Functions ... 4
7 Specifications ... 5
7.1 Absolute Maximum Ratings ... 5
7.2 ESD Ratings ... 5
7.3 Recommended Operating Conditions ... 5
7.4 Thermal Information ... 5
7.5 Power Ratings ... 5
7.6 Insulation Specifications ... 6
7.7 Safety-Related Certifications ... 7
7.8 Safety Limiting Values ... 7
7.9 Electrical Characteristics: AMC1306x05 ... 8
7.10 Electrical Characteristics: AMC1306x25 ... 10
7.11 Switching Characteristics ... 12
7.12 Insulation Characteristics Curves ... 13
7.13 Typical Characteristics ... 14
8 Detailed Description ... 21
8.1 Overview ... 21
8.2 Functional Block Diagram ... 21
8.3 Feature Description ... 22
8.4 Device Functional Modes ... 26
9 Application and Implementation ... 27
9.1 Application Information ... 27
9.2 Typical Applications ... 28
10 Power Supply Recommendations ... 33
11 Layout ... 34
11.1 Layout Guidelines ... 34
11.2 Layout Example ... 34
12 Device and Documentation Support ... 35
12.1 Device Support ... 35
12.2 Documentation Support ... 35
12.3 Related Links ... 35
12.4 Receiving Notification of Documentation Updates 35
12.5 Community Resources ... 35
12.6 Trademarks ... 35
12.7 Electrostatic Discharge Caution ... 35
12.8 Glossary ... 36
13 Mechanical, Packaging, and Orderable Information ... 36

4 Revision History

Changes from Revision B (June 2018) to Revision C	Page
• Changed *Safety-related certifications* bullet in *Features* section: changed *VDE certification* revision from *DIN V VDE V 0884-10 (VDE V 0884-11)* to *DIN VDE V 0884-11* and changed *IEC 60950-1, and IEC 60065* to *IEC 62368-1*	1
• Changed *DIN V VDE V* to *DIN VDE V* in *Description* section	1
• Changed CLR and CPG values from ≥ 9 mm to ≥ 8.5 mm in *Insulation Specifications* table	6
• Changed *Insulation Specifications* table header row from *DIN V VDE V 0884-11 (VDE V 0884-11): 2017-01* to *DIN VDE V 0884-11: 2017-01*	6
• Changed VDE certification details in *Safety-Related Certifications* table	7
• Changed *Safety Limiting Values* table format as per current standard	7
• Changed *free air* to *ambient* in condition statement of *Switching Characteristics* table	12
• Changed 6.05 dB to 6.02 dB in Equation 3	27
• Changed input common-mode voltage from 2 V to 1.9 V for consistency with *Input Bias Current vs Common-Mode Input Voltage* figure in *What To Do and What Not To Do* section	32
• Changed *VINx* to *AINx* in *Layout Guidelines* section	34
• Changed *Recommended Layout of the AMC1306x* figure to include connection to the shunt resistor and input filter components	34

Changes from Revision A (July 2017) to Revision B	Page
• Changed *Reinforced Isolation Capacitor Lifetime Projection* figure	13

Copyright © 2017–2020, Texas Instruments Incorporated

Changes from Original (March 2017) to Revision A **Page**

- Released AMC1306E05 and AMC1306M05 to production 1
- Added ±50 µV to first *DC Performance* sub-bullet to reflect the AMC1306x05 devices 1
- Changed standard deviation from 0884-10 to 0884-11 in first *Safety-Related Certifications* sub-bullet 1
- Changed V_{PEAK} from 8000 to 7000 and standard deviation from 0884-10 to 0884-11 in first paragraph of *Description* section 1
- Deleted Status column from *Device Comparison Table* 4
- Changed standard deviation from 0884-10 to 0884-11 in *DIN V VDE V 0884-11* section of *Insulation Specifications* table 6
- Changed standard deviation from 0884-10 to 0884-11 in *Safety-Related Certifications* table 7
- Changed *prevent* to *minimize* in condition statement of *Safety Limiting Values* table 7
- Added *Electrical Characteristics: AMC1306x05* table 8
- Changed test conditions of Analog Inputs test conditions from *(AINP – AINN) / 2 to AGND* to *(AINP + AINN) / 2 to AGND* to include all possible conditions 10
- Changed I_{IB} test condition from *Inputs shorted to AGND* to *AINP = AINN = AGND,* $I_{IB} = I_{IBP} + I_{IBN}$ 10
- Added *AINP = AINN = AGND* to E_O parameter test conditions 10
- Changed minus sign to plus or minus sign in typical specification of E_G parameter 10
- Changed *10% to 90%* to *90% to 10%* in test conditions of t_f parameter 12
- Added AMC1306x05 devices to *Typical Characteristics* section 14

5 Device Comparison Table

PART NUMBER	INPUT VOLTAGE RANGE	DIFFERENTIAL INPUT RESISTANCE	DIGITAL OUTPUT INTERFACE
AMC1306E05	±50 mV	4.9 kΩ	Manchester coded CMOS
AMC1306E25	±250 mV	22 kΩ	Manchester coded CMOS
AMC1306M05	±50 mV	4.9 kΩ	Uncoded CMOS
AMC1306M25	±250 mV	22 kΩ	Uncoded CMOS

6 Pin Configuration and Functions

DWV Package
8-Pin SOIC
Top View

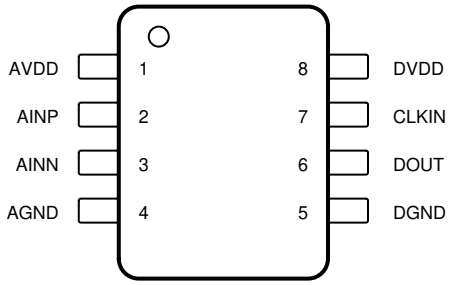

Not to scale

Pin Functions

PIN		I/O	DESCRIPTION
NO.	NAME		
1	AVDD	—	Analog (high-side) power supply, 3.0 V to 5.5 V. See the *Power Supply Recommendations* section for decoupling recommendations.
2	AINP	I	Noninverting analog input
3	AINN	I	Inverting analog input
4	AGND	—	Analog (high-side) ground reference
5	DGND	—	Digital (controller-side) ground reference
6	DOUT	O	Modulator data output. This pin is a Manchester coded output for AMC1306Ex derivates.
7	CLKIN	I	Modulator clock input: 5 MHz to 21 MHz (5-V operation) with internal pulldown resistor (typical value: 1.5 MΩ)
8	DVDD	—	Digital (controller-side) power supply, 2.7 V to 5.5 V. See the *Power Supply Recommendations* section for decoupling recommendations.

Copyright © 2017–2020, Texas Instruments Incorporated

7 Specifications

7.1 Absolute Maximum Ratings(1)

		MIN	MAX	UNIT
Supply voltage	AVDD to AGND or DVDD to DGND	–0.3	6.5	V
Analog input voltage at AINP, AINN		AGND – 6	AVDD + 0.5	V
Digital input or output voltage at CLKIN or DOUT		DGND – 0.5	DVDD + 0.5	V
Input current to any pin except supply pins		–10	10	mA
Junction temperature, T_J			150	°C
Storage temperature, T_{stg}		–65	150	°C

(1) Stresses beyond those listed under *Absolute Maximum Ratings* may cause permanent damage to the device. These are stress ratings only, and do not imply functional operation of the device at these or any other conditions beyond those indicated under *Recommended Operating Conditions*. Exposure to absolute-maximum-rated conditions for extended periods may affect device reliability.

7.2 ESD Ratings

			VALUE	UNIT
$V_{(ESD)}$	Electrostatic discharge	Human-body model (HBM), per ANSI/ESDA/JEDEC JS-001(1)	±2000	V
		Charged-device model (CDM), per JEDEC specification JESD22-C101(2)	±1000	

(1) JEDEC document JEP155 states that 500-V HBM allows safe manufacturing with a standard ESD control process.
(2) JEDEC document JEP157 states that 250-V CDM allows safe manufacturing with a standard ESD control process.

7.3 Recommended Operating Conditions

over operating ambient temperature range (unless otherwise noted)

		MIN	NOM	MAX	UNIT
AVDD	Analog (high-side) supply voltage (AVDD to AGND)	3.0	5.0	5.5	V
DVDD	Digital (controller-side) supply voltage (DVDD to DGND)	2.7	3.3	5.5	V
T_A	Operating ambient temperature	–40		125	°C

7.4 Thermal Information

THERMAL METRIC (1)		AMC1306x DWV (SOIC) 8 PINS	UNIT
$R_{\theta JA}$	Junction-to-ambient thermal resistance	112.2	°C/W
$R_{\theta JC(top)}$	Junction-to-case (top) thermal resistance	47.6	°C/W
$R_{\theta JB}$	Junction-to-board thermal resistance	60.0	°C/W
ψ_{JT}	Junction-to-top characterization parameter	23.1	°C/W
ψ_{JB}	Junction-to-board characterization parameter	60.0	°C/W
$R_{\theta JC(bot)}$	Junction-to-case (bottom) thermal resistance	n/a	°C/W

(1) For more information about traditional and new thermal metrics, see the *Semiconductor and IC Package Thermal Metrics* application report.

7.5 Power Ratings

PARAMETER		TEST CONDITIONS	MIN	TYP	MAX	UNIT
P_D	Maximum power dissipation (both sides)	AMC1306Ex, AVDD = DVDD = 5.5 V			91.85	mW
		AMC1306Mx, AVDD = DVDD = 5.5 V			86.90	
P_{D1}	Maximum power dissipation (high-side supply)	AVDD = 5.5 V			53.90	mW
P_{D2}	Maximum power dissipation (low-side supply)	AMC1306Ex, DVDD = 5.5 V			37.95	mW
		AMC1306Mx, DVDD = 5.5 V			33.00	

Copyright © 2017–2020, Texas Instruments Incorporated

7.6 Insulation Specifications

over operating ambient temperature range (unless otherwise noted)

PARAMETER		TEST CONDITIONS	VALUE	UNIT
GENERAL				
CLR	External clearance(1)	Shortest pin-to-pin distance through air	≥ 8.5	mm
CPG	External creepage(1)	Shortest pin-to-pin distance across the package surface	≥ 8.5	mm
DTI	Distance through insulation	Minimum internal gap (internal clearance) of the double insulation (2 × 0.0105 mm)	≥ 0.021	mm
CTI	Comparative tracking index	DIN EN 60112 (VDE 0303-11); IEC 60112	≥ 600	V
	Material group	According to IEC 60664-1	I	
	Overvoltage category per IEC 60664-1	Rated mains voltage ≤ 300 V_{RMS}	I-IV	
		Rated mains voltage ≤ 600 V_{RMS}	I-IV	
		Rated mains voltage ≤ 1000 V_{RMS}	I-III	
DIN VDE V 0884-11: 2017-01(2)				
V_{IORM}	Maximum repetitive peak isolation voltage	At ac voltage (bipolar)	2121	V_{PK}
V_{IOWM}	Maximum-rated isolation working voltage	At ac voltage (sine wave)	1500	V_{RMS}
		At dc voltage	2121	V_{DC}
V_{IOTM}	Maximum transient isolation voltage	$V_{TEST} = V_{IOTM}$, t = 60 s (qualification test)	7000	V_{PK}
		$V_{TEST} = 1.2 \times V_{IOTM}$, t = 1 s (100% production test)	8400	
V_{IOSM}	Maximum surge isolation voltage(3)	Test method per IEC 60065, 1.2/50-µs waveform, $V_{TEST} = 1.6 \times V_{IOSM} = 12800\ V_{PK}$ (qualification)	8000	V_{PK}
q_{pd}	Apparent charge(4)	Method a, after input/output safety test subgroup 2/3, $V_{ini} = V_{IOTM}$, t_{ini} = 60 s, $V_{pd(m)} = 1.2 \times V_{IORM} = 2545\ V_{PK}$, t_m = 10 s	≤ 5	pC
		Method a, after environmental tests subgroup 1, $V_{ini} = V_{IOTM}$, t_{ini} = 60 s, $V_{pd(m)} = 1.6 \times V_{IORM} = 3394\ V_{PK}$, t_m = 10 s	≤ 5	
		Method b1, at routine test (100% production) and preconditioning (type test), $V_{ini} = V_{IOTM}$, t_{ini} = 1 s, $V_{pd(m)} = 1.875 \times V_{IORM} = 3977\ V_{PK}$, t_m = 1 s	≤ 5	
C_{IO}	Barrier capacitance, input to output(5)	V_{IO} = 0.5 V_{PP} at 1 MHz	~1	pF
R_{IO}	Insulation resistance, input to output(5)	V_{IO} = 500 V at T_A = 25°C	> 10^{12}	Ω
		V_{IO} = 500 V at 100°C ≤ T_A ≤ 125°C	> 10^{11}	
		V_{IO} = 500 V at T_S = 150°C	> 10^{9}	
	Pollution degree		2	
	Climatic category		40/125/21	
UL1577				
V_{ISO}	Withstand isolation voltage	$V_{TEST} = V_{ISO}$ = 5000 V_{RMS} or 7000 V_{DC}, t = 60 s (qualification), $V_{TEST} = 1.2 \times V_{ISO}$ = 6000 V_{RMS}, t = 1 s (100% production test)	5000	V_{RMS}

(1) Apply creepage and clearance requirements according to the specific equipment isolation standards of an application. Care must be taken to maintain the creepage and clearance distance of a board design to ensure that the mounting pads of the isolator on the printed circuit board (PCB) do not reduce this distance. Creepage and clearance on a PCB become equal in certain cases. Techniques such as inserting grooves and ribs on the PCB are used to help increase these specifications.
(2) This coupler is suitable for *safe electrical insulation* only within the safety ratings. Compliance with the safety ratings shall be ensured by means of suitable protective circuits.
(3) Testing is carried out in air or oil to determine the intrinsic surge immunity of the isolation barrier.
(4) Apparent charge is electrical discharge caused by a partial discharge (pd).
(5) All pins on each side of the barrier are tied together, creating a two-pin device.

Copyright © 2017–2020, Texas Instruments Incorporated

7.7 Safety-Related Certifications

VDE	UL
Certified according to DIN VDE V 0884-11: 2017-01, DIN EN 62368-1: 2016-05, EN 62368-1: 2014, and IEC 62368-1: 2014	Recognized under 1577 component recognition and CSA component acceptance NO 5 programs
Reinforced insulation	Single protection
File number: DIN 40040142	File number: E181974

7.8 Safety Limiting Values

Safety limiting intends to minimize potential damage to the isolation barrier upon failure of input or output circuitry.

PARAMETER		TEST CONDITIONS	MIN	TYP	MAX	UNIT
I_S	Safety input, output, or supply current	$R_{\theta JA}$ = 112.2°C/W, AVDD = DVDD = 5.5 V, T_J = 150°C, T_A = 25°C			202.5	mA
		$R_{\theta JA}$ = 112.2°C/W, AVDD = DVDD = 3.6 V, T_J = 150°C, T_A = 25°C			309.4	
P_S	Safety input, output, or total power	$R_{\theta JA}$ = 112.2°C/W, T_J = 150°C, T_A = 25°C			1114 (1)	mW
T_S	Maximum safety temperature				150	°C

(1) The maximum safety temperature, T_S, has the same value as the maximum junction temperature, T_J, specified for the device. The I_S and P_S parameters represent the safety current and safety power, respectively. Do not exceed the maximum limits of I_S and P_S. These limits vary with the ambient temperature, T_A.
The junction-to-air thermal resistance, $R_{\theta JA}$, in the *Thermal Information* table is that of a device installed on a high-K test board for leaded surface-mount packages. Use these equations to calculate the value for each parameter:
$T_J = T_A + R_{\theta JA} \times P$, where P is the power dissipated in the device.
$T_{J(max)} = T_S = T_A + R_{\theta JA} \times P_S$, where $T_{J(max)}$ is the maximum junction temperature.
$P_S = I_S \times AVDD_{max} + I_S \times AVDD_{max}$, where $AVDD_{max}$ is the maximum high-side supply voltage and $DVDD_{max}$ is the maximum controller-side supply voltage.

7.9 Electrical Characteristics: AMC1306x05

minimum and maximum specifications apply from T_A = –40°C to +125°C, AVDD = 3.0 V to 5.5 V, DVDD = 2.7 V to 5.5 V, AINP = –50 mV to 50 mV, AINN = AGND, and $sinc^3$ filter with OSR = 256 (unless otherwise noted); typical specifications are at T_A = 25°C, CLKIN = 20 MHz, AVDD = 5 V, and DVDD = 3.3 V

PARAMETER		TEST CONDITIONS	MIN	TYP	MAX	UNIT
ANALOG INPUTS						
$V_{Clipping}$	Differential input voltage before clipping output	V_{IN} = AINP – AINN		±64		mV
FSR	Specified linear differential full-scale	V_{IN} = AINP – AINN	–50		50	mV
	Absolute common-mode input voltage(1)	(AINP + AINN) / 2 to AGND	–2		AVDD	V
V_{CM}	Operating common-mode input voltage	(AINP + AINN) / 2 to AGND	–0.032		AVDD – 2.1	V
V_{CMov}	Common-mode overvoltage detection level(2)	(AINP + AINN) / 2 to AGND	AVDD - 2			V
C_{IN}	Single-ended input capacitance	AINN = AGND		4		pF
C_{IND}	Differential input capacitance			2		pF
I_{IB}	Input bias current	AINP = AINN = AGND, $I_{IB} = I_{IBP} + I_{IBN}$	–97	–72	–57	µA
R_{IN}	Single-ended input resistance	AINN = AGND		4.75		kΩ
R_{IND}	Differential input resistance			4.9		kΩ
I_{IO}	Input offset current			±10		nA
CMTI	Common-mode transient immunity		50	100		kV/µs
CMRR	Common-mode rejection ratio	AINP = AINN, f_{IN} = 0 Hz, $V_{CM\ min} \le V_{IN} \le V_{CM\ max}$		–99		dB
		AINP = AINN, f_{IN} from 0.1 Hz to 50 kHz, $V_{CM\ min} \le V_{IN} \le V_{CM\ max}$		–98		
BW	Input bandwidth(3)			800		kHz
DC ACCURACY						
DNL	Differential nonlinearity	Resolution: 16 bits	–0.99		0.99	LSB
INL	Integral nonlinearity(4)	Resolution: 16 bits, 4.5 V ≤ AVDD ≤ 5.5 V	–4	±1	4	LSB
		Resolution: 16 bits, 3.0 V ≤ AVDD ≤ 3.6 V	–5	±1.5	5	
E_O	Offset error	Initial, at 25°C, AINP = AINN = AGND	–50	±2.5	50	µV
TCE_O	Offset error thermal drift(5)		–1	±0.25	1	µV/°C
E_G	Gain error	Initial, at 25°C	–0.2%	±0.005%	0.2%	
TCE_G	Gain error thermal drift(6)		–40	±20	40	ppm/°C
PSRR	Power-supply rejection ratio	AINP = AINN = AGND, 3.0 V ≤ AVDD ≤ 5.5 V, at dc		–108		dB
		AINP = AINN = AGND, 3.0 V ≤ AVDD ≤ 5.5 V, 10 kHz, 100-mV ripple		–107		
AC ACCURACY						
SNR	Signal-to-noise ratio	f_{IN} = 1 kHz	78	82.5		dB
SINAD	Signal-to-noise + distortion	f_{IN} = 1 kHz	77.5	82.3		dB
THD	Total harmonic distortion	4.5 V ≤ AVDD ≤ 5.5 V, 5 MHz ≤ f_{CLKIN} ≤ 21 MHz, f_{IN} = 1 kHz		–98	–84	dB
		3.0 V ≤ AVDD ≤ 3.6 V, 5 MHz ≤ f_{CLKIN} ≤ 20 MHz, f_{IN} = 1 kHz		–93	–83	
SFDR	Spurious-free dynamic range	f_{IN} = 1 kHz	83	100		dB

(1) Steady-state voltage supported by the device in case of a system failure. See specified common-mode input voltage V_{CM} for normal operation. Observe analog input voltage range as specified in the *Absolute Maximum Ratings* table.
(2) The common-mode overvoltage detection level has a typical hysteresis of 90 mV.
(3) This is the –3-dB, second-order roll-off frequency of the integrated differential input amplifier to consider for the antialiasing filter design.
(4) Integral nonlinearity is defined as the maximum deviation from a straight line passing through the end-points of the ideal ADC transfer function expressed as a number of LSBs or as a percent of the specified linear full-scale range (FSR).
(5) Offset error drift is calculated using the box method, as described by the following equation:

$$TCE_O = \frac{value_{MAX} - value_{MIN}}{TempRange}$$

(6) Gain error drift is calculated using the box method, as described by the following equation:

$$TCE_G(ppm) = \left(\frac{value_{MAX} - value_{MIN}}{value \times TempRange}\right) \times 10^6$$

Copyright © 2017–2020, Texas Instruments Incorporated

Electrical Characteristics: AMC1306x05 (continued)

minimum and maximum specifications apply from T_A = –40°C to +125°C, AVDD = 3.0 V to 5.5 V, DVDD = 2.7 V to 5.5 V, AINP = –50 mV to 50 mV, AINN = AGND, and $sinc^3$ filter with OSR = 256 (unless otherwise noted); typical specifications are at T_A = 25°C, CLKIN = 20 MHz, AVDD = 5 V, and DVDD = 3.3 V

PARAMETER		TEST CONDITIONS	MIN	TYP	MAX	UNIT
DIGITAL INPUTS/OUTPUTS						
CMOS Logic With Schmitt-Trigger						
I_{IN}	Input current	DGND ≤ V_{IN} ≤ DVDD	0		7	µA
C_{IN}	Input capacitance			4		pF
V_{IH}	High-level input voltage		0.7 × DVDD		DVDD + 0.3	V
V_{IL}	Low-level input voltage		–0.3		0.3 × DVDD	V
C_{LOAD}	Output load capacitance			30		pF
V_{OH}	High-level output voltage	I_{OH} = –20 µA	DVDD – 0.1			V
		I_{OH} = –4 mA	DVDD – 0.4			
V_{OL}	Low-level output voltage	I_{OL} = 20 µA			0.1	V
		I_{OL} = 4 mA			0.4	
POWER SUPPLY						
AVDD	High-side supply voltage		3.0	5.0	5.5	V
I_{AVDD}	High-side supply current	3.0 V ≤ AVDD ≤ 3.6 V		6.3	8.5	mA
		4.5 V ≤ AVDD ≤ 5.5 V		7.2	9.8	
DVDD	Controller-side supply voltage		2.7	3.3	5.5	V
I_{DVDD}	Controller-side supply current	AMC1306Ex, 2.7 V ≤ DVDD ≤ 3.6 V, C_{LOAD} = 15 pF		4.1	5.5	mA
		AMC1306Mx, 2.7 V ≤ DVDD ≤ 3.6 V, C_{LOAD} = 15 pF		3.3	4.8	
		AMC1306Ex, 4.5 V ≤ DVDD ≤ 5.5 V, C_{LOAD} = 15 pF		5.0	6.9	
		AMC1306Mx, 4.5 V ≤ DVDD ≤ 5.5 V, C_{LOAD} = 15 pF		3.9	6.0	

7.10 Electrical Characteristics: AMC1306x25

minimum and maximum specifications apply from T_A = –40°C to +125°C, AVDD = 3.0 V to 5.5 V, DVDD = 2.7 V to 5.5 V, AINP = –250 mV to 250 mV, AINN = AGND, and $sinc^3$ filter with OSR = 256 (unless otherwise noted); typical specifications are at T_A = 25°C, CLKIN = 20 MHz, AVDD = 5 V, and DVDD = 3.3 V

PARAMETER		TEST CONDITIONS	MIN	TYP	MAX	UNIT
ANALOG INPUTS						
$V_{Clipping}$	Differential input voltage before clipping output	AINP – AINN		±320		mV
FSR	Specified linear differential full-scale	AINP – AINN	–250		250	mV
	Absolute common-mode input voltage(1)	(AINP + AINN) / 2 to AGND	–2		AVDD	V
V_{CM}	Operating common-mode input voltage	(AINP + AINN) / 2 to AGND	–0.16		AVDD – 2.1	V
V_{CMov}	Common-mode overvoltage detection level(2)	(AINP + AINN) / 2 to AGND	AVDD – 2			V
C_{IN}	Single-ended input capacitance	AINN = AGND		2		pF
C_{IND}	Differential input capacitance			1		pF
I_{IB}	Input bias current	AINP = AINN = AGND, $I_{IB} = I_{IBP} + I_{IBN}$	–82	–60	–48	µA
R_{IN}	Single-ended input resistance	AINN = AGND		19		kΩ
R_{IND}	Differential input resistance			22		kΩ
I_{IO}	Input offset current			±5		nA
CMTI	Common-mode transient immunity		50	100		kV/µs
CMRR	Common-mode rejection ratio	AINP = AINN, f_{IN} = 0 Hz, $V_{CM\ min} \le V_{IN} \le V_{CM\ max}$		–95		dB
		AINP = AINN, f_{IN} from 0.1 Hz to 50 kHz, $V_{CM\ min} \le V_{IN} \le V_{CM\ max}$		–95		
BW	Input bandwidth(3)			900		kHz
DC ACCURACY						
DNL	Differential nonlinearity	Resolution: 16 bits	–0.99		0.99	LSB
INL	Integral nonlinearity(4)	Resolution: 16 bits	–4	±1	4	LSB
E_O	Offset error	Initial, at 25°C, AINP = AINN = AGND	–100	±4.5	100	µV
TCE_O	Offset error thermal drift(5)		–1	±0.15	1	µV/°C
E_G	Gain error	Initial, at 25°C	–0.2%	±0.005%	0.2%	
TCE_G	Gain error thermal drift(6)		–40	±20	40	ppm/°C
PSRR	Power-supply rejection ratio	AINP = AINN = AGND, 3.0 V ≤ AVDD ≤ 5.5 V, at dc		–103		dB
		AINP = AINN = AGND, 3.0 V ≤ AVDD ≤ 5.5 V, 10 kHz, 100-mV ripple		–92		
AC ACCURACY						
SNR	Signal-to-noise ratio	f_{IN} = 1 kHz	82	86		dB
SINAD	Signal-to-noise + distortion	f_{IN} = 1 kHz	81.9	85.7		dB
THD	Total harmonic distortion	4.5 V ≤ AVDD ≤ 5.5 V, 5 MHz ≤ f_{CLKIN} ≤ 21 MHz, f_{IN} = 1 kHz		–98	–86	dB
		3.0 V ≤ AVDD ≤ 3.6 V, 5 MHz ≤ f_{CLKIN} ≤ 20 MHz, f_{IN} = 1 kHz		–93	–85	
SFDR	Spurious-free dynamic range	f_{IN} = 1 kHz	83	100		dB

(1) Steady-state voltage supported by the device in case of a system failure; see the specified common-mode input voltage V_{CM} for normal operation. Adhere to the analog input voltage range as specified in the *Absolute Maximum Ratings* table.
(2) The common-mode overvoltage detection level has a typical hysteresis of 90 mV.
(3) This parameter is the –3-dB, second-order, roll-off frequency of the integrated differential input amplifier to consider for antialiasing filter designs.
(4) Integral nonlinearity is defined as the maximum deviation from a straight line passing through the end-points of the ideal ADC transfer function expressed as number of LSBs or as a percent of the specified linear full-scale range FSR.
(5) Offset error drift is calculated using the box method, as described by the following equation: $TCE_O = \frac{value_{MAX} - value_{MIN}}{TempRange}$.
(6) Gain error drift is calculated using the box method, as described by the following equation: $TCE_G(ppm) = \left(\frac{value_{MAX} - value_{MIN}}{value \times TempRange}\right) \times 10^6$.

Copyright © 2017–2020, Texas Instruments Incorporated

Electrical Characteristics: AMC1306x25 (continued)

minimum and maximum specifications apply from T_A = –40°C to +125°C, AVDD = 3.0 V to 5.5 V, DVDD = 2.7 V to 5.5 V, AINP = –250 mV to 250 mV, AINN = AGND, and $sinc^3$ filter with OSR = 256 (unless otherwise noted); typical specifications are at T_A = 25°C, CLKIN = 20 MHz, AVDD = 5 V, and DVDD = 3.3 V

PARAMETER		TEST CONDITIONS	MIN	TYP	MAX	UNIT
DIGITAL INPUTS/OUTPUTS						
CMOS Logic with Schmitt-trigger						
I_{IN}	Input current	DGND ≤ V_{IN} ≤ DVDD	0		7	µA
C_{IN}	Input capacitance			4		pF
V_{IH}	High-level input voltage		0.7 × DVDD		DVDD + 0.3	V
V_{IL}	Low-level input voltage		–0.3		0.3 × DVDD	V
C_{LOAD}	Output load capacitance	f_{CLKIN} = 20 MHz		30		pF
V_{OH}	High-level output voltage	I_{OH} = –20 µA	DVDD – 0.1			V
		I_{OH} = –4 mA	DVDD – 0.4			
V_{OL}	Low-level output voltage	I_{OL} = 20 µA			0.1	V
		I_{OL} = 4 mA			0.4	
POWER SUPPLY						
AVDD	High-side supply voltage		3.0	5.0	5.5	V
I_{AVDD}	High-side supply current	3.0 V ≤ AVDD ≤ 3.6 V		6.3	8.5	mA
		4.5 V ≤ AVDD ≤ 5.5 V		7.2	9.8	
DVDD	Controller-side supply voltage		2.7	3.3	5.5	V
I_{DVDD}	Controller-side supply current	AMC1306Ex, 2.7 V ≤ DVDD ≤ 3.6 V, C_{LOAD} = 15 pF		4.1	5.5	mA
		AMC1306Mx, 2.7 V ≤ DVDD ≤ 3.6 V, C_{LOAD} = 15 pF		3.3	4.8	
		AMC1306Ex, 4.5 V ≤ DVDD ≤ 5.5 V, C_{LOAD} = 15 pF		5.0	6.9	
		AMC1306Mx, 4.5 V ≤ DVDD ≤ 5.5 V, C_{LOAD} = 15 pF		3.9	6.0	

7.11 Switching Characteristics

over operating ambient temperature range (unless otherwise noted)

PARAMETER		TEST CONDITIONS	MIN	TYP	MAX	UNIT
f_{CLKIN}	CLKIN clock frequency	4.5 V ≤ AVDD ≤ 5.5 V	5		21	MHz
		3.0 V ≤ AVDD ≤ 5.5 V	5		20	
t_{CLKIN}	CLKIN clock period	4.5 V ≤ AVDD ≤ 5.5 V	47.6		200	ns
		3.0 V ≤ AVDD ≤ 5.5 V	50		200	
t_{HIGH}	CLKIN clock high time		20	25	120	ns
t_{LOW}	CLKIN clock low time		20	25	120	ns
t_H	DOUT hold time after rising edge of CLKIN	AMC1306Mx(1), C_{LOAD} = 15 pF	3.5			ns
t_D	Rising edge of CLKIN to DOUT valid delay	AMC1306Mx(1), C_{LOAD} = 15 pF			15	ns
t_r	DOUT rise time	10% to 90%, 2.7 V ≤ DVDD ≤ 3.6 V, C_{LOAD} = 15 pF		0.8	3.5	ns
		10% to 90%, 4.5 V ≤ DVDD ≤ 5.5 V, C_{LOAD} = 15 pF		1.8	3.9	
t_f	DOUT fall time	90% to 10%, 2.7 V ≤ DVDD ≤ 3.6 V, C_{LOAD} = 15 pF		0.8	3.5	ns
		90% to 10%, 4.5 V ≤ DVDD ≤ 5.5 V, C_{LOAD} = 15 pF		1.8	3.9	
t_{ISTART}	Interface startup time	DVDD at 2.7 V (min) to DOUT valid with AVDD ≥ 3.0 V	32		32	CLKIN cycles
t_{ASTART}	Analog startup time	AVDD step to 3.0 V with DVDD ≥ 2.7 V, 0.1% settling		0.5		ms

(1) The output of the Manchester encoded versions of the AMC1306Ex can change with every edge of CLKIN with a typical delay of 6 ns; see the *Manchester Coding Feature* section for additional details.

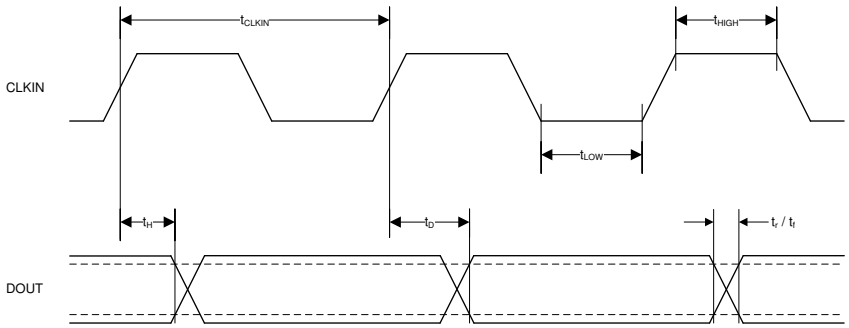

Figure 1. Digital Interface Timing

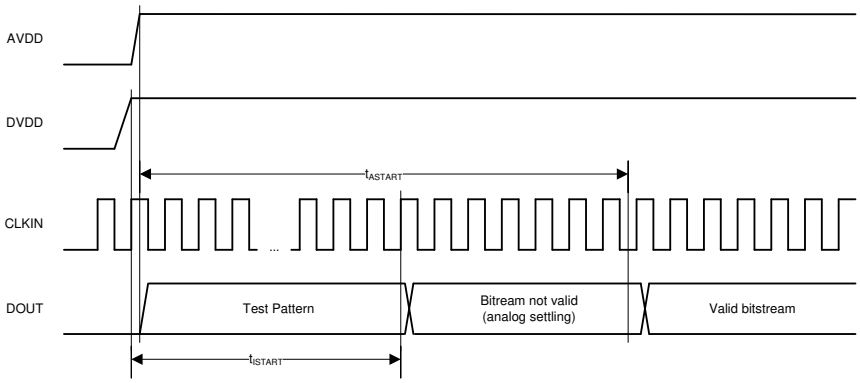

Figure 2. Device Startup Timing

Copyright © 2017–2020, Texas Instruments Incorporated

7.12 Insulation Characteristics Curves

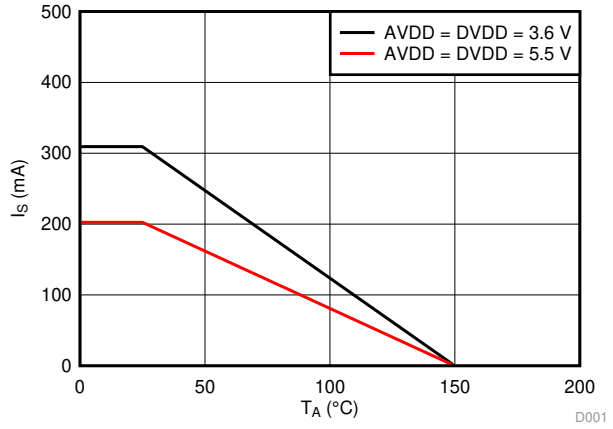

Figure 3. Thermal Derating Curve for Safety-Limiting Current per VDE

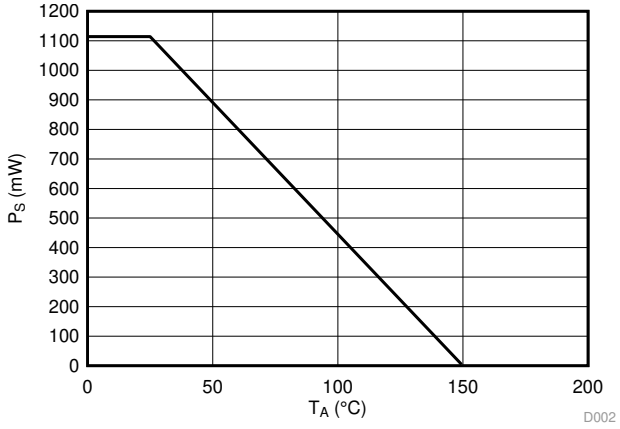

Figure 4. Thermal Derating Curve for Safety-Limiting Power per VDE

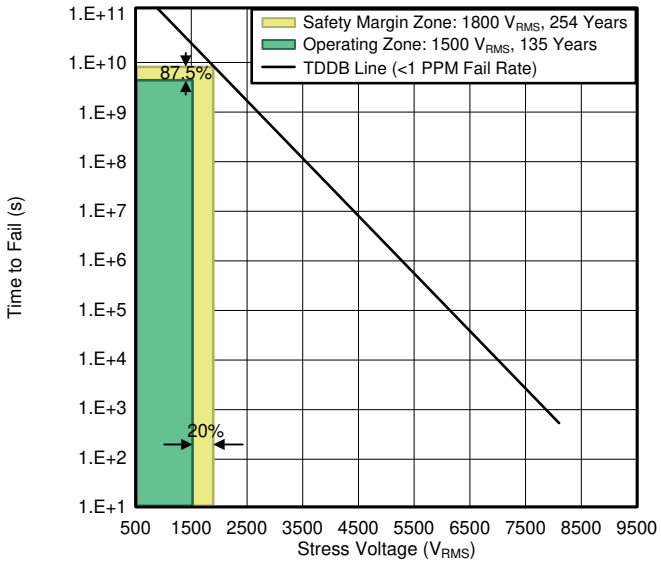

T_A up to 150°C, stress-voltage frequency = 60 Hz,
isolation working voltage = 1500 V_{RMS}, operating lifetime = 135 years

Figure 5. Reinforced Isolation Capacitor Lifetime Projection

7.13 Typical Characteristics

at AVDD = 5 V, DVDD = 3.3 V, AINP = –50 mV to 50 mV (AMC1306x05) or –250 mV to 250 mV (AMC1306x25), AINN = AGND, f_{CLKIN} = 20 MHz, and $sinc^3$ filter with OSR = 256 (unless otherwise noted)

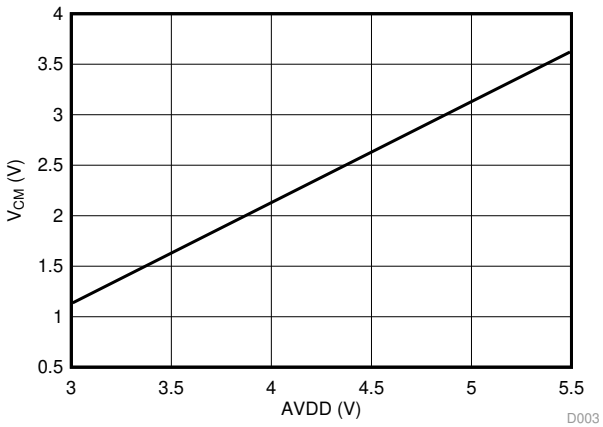

Figure 6. Maximum Operating Common-Mode Input Voltage vs High-Side Supply Voltage

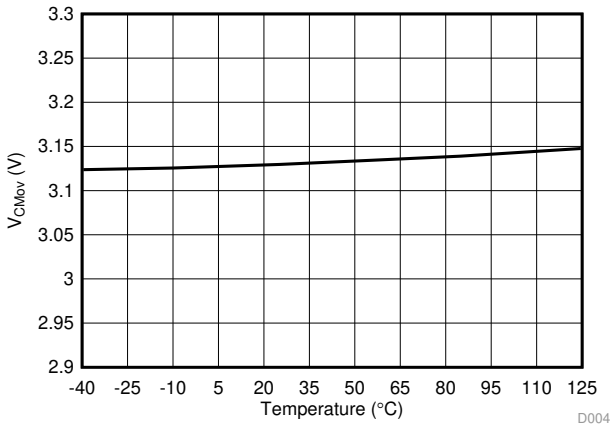

Figure 7. Common-Mode Overvoltage Detection Level vs Temperature

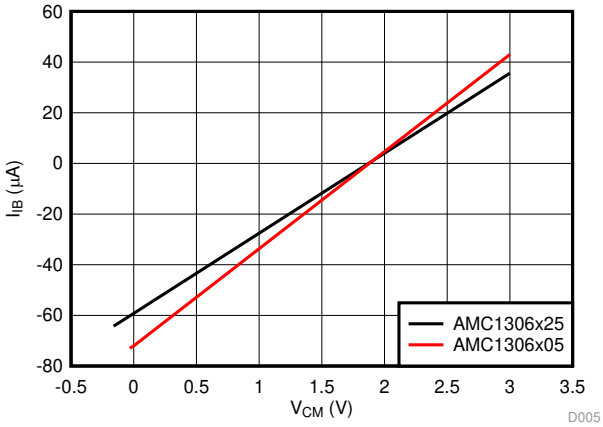

Figure 8. Input Bias Current vs Common-Mode Input Voltage

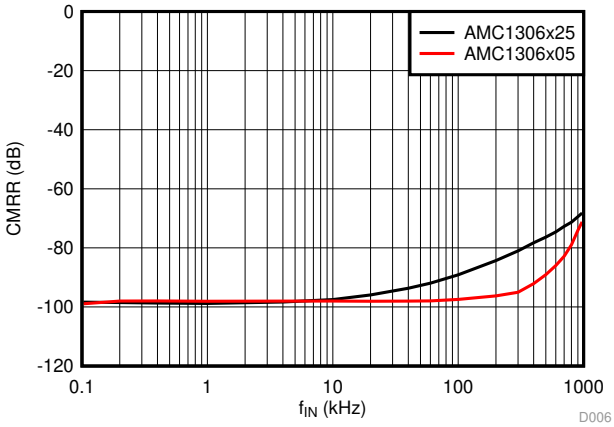

Figure 9. Common-Mode Rejection Ratio vs Input Signal Frequency

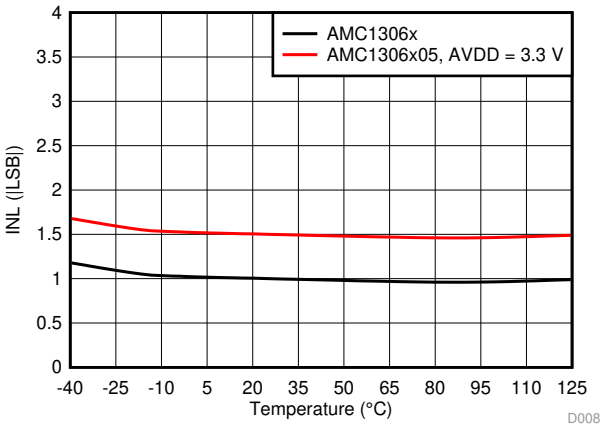

Figure 10. Integral Nonlinearity vs Temperature

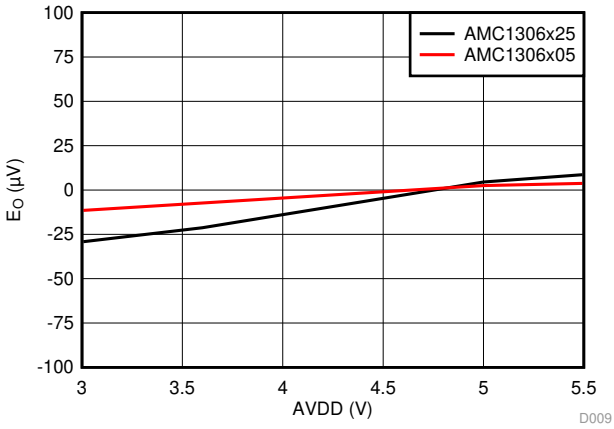

Figure 11. Offset Error vs High-Side Supply Voltage

Copyright © 2017–2020, Texas Instruments Incorporated

Typical Characteristics (continued)

at AVDD = 5 V, DVDD = 3.3 V, AINP = –50 mV to 50 mV (AMC1306x05) or –250 mV to 250 mV (AMC1306x25), AINN = AGND, f_{CLKIN} = 20 MHz, and $sinc^3$ filter with OSR = 256 (unless otherwise noted)

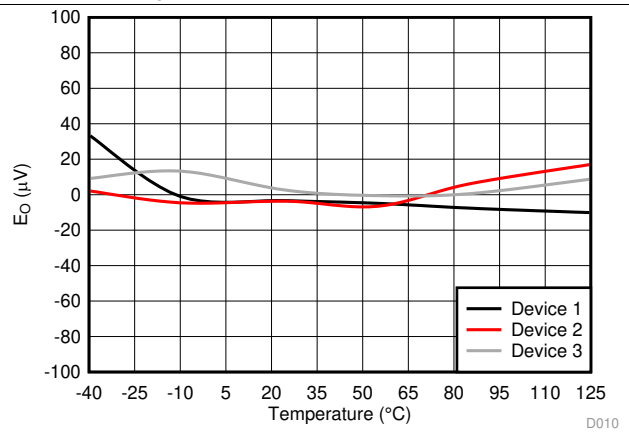

Figure 12. Offset Error vs Temperature

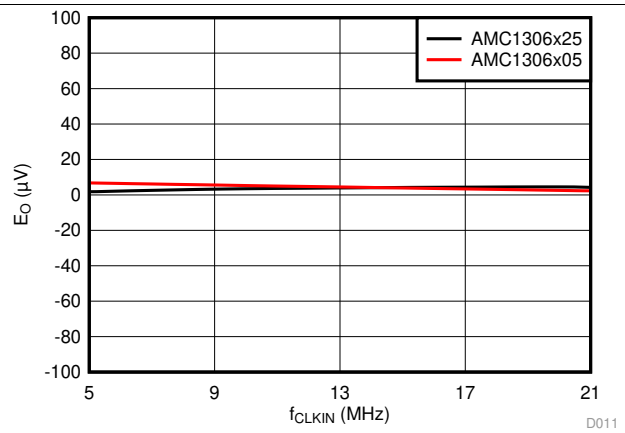

Figure 13. Offset Error vs Clock Frequency

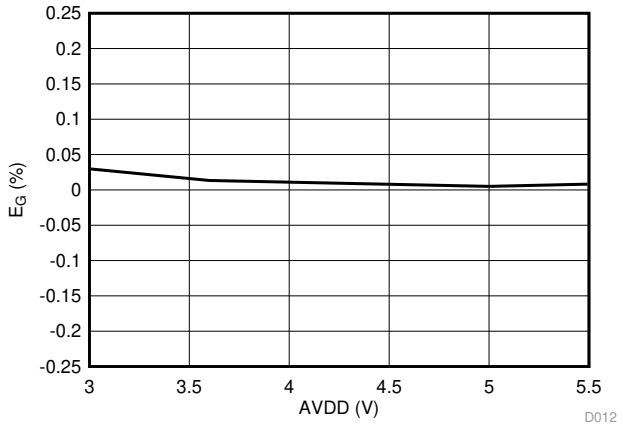

Figure 14. Gain Error vs High-Side Supply Voltage

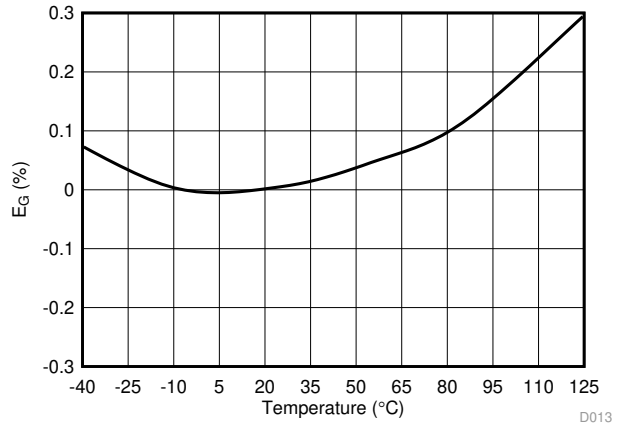

Figure 15. Gain Error vs Temperature

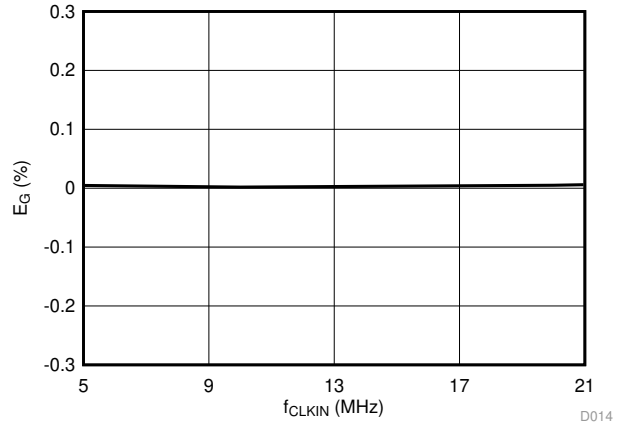

Figure 16. Gain Error vs Clock Frequency

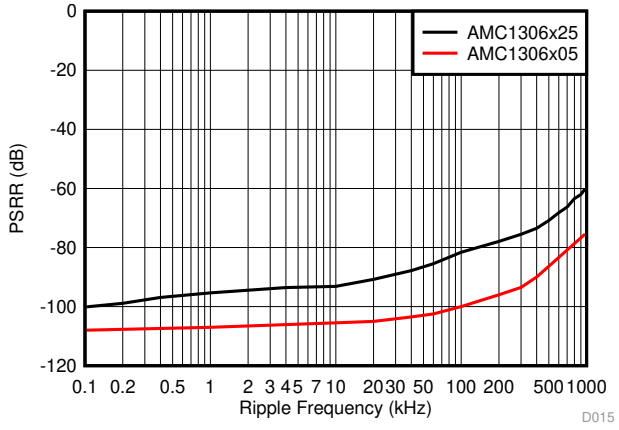

Figure 17. Power-Supply Rejection Ratio vs Ripple Frequency

Typical Characteristics (continued)

at AVDD = 5 V, DVDD = 3.3 V, AINP = –50 mV to 50 mV (AMC1306x05) or –250 mV to 250 mV (AMC1306x25), AINN = AGND, f_{CLKIN} = 20 MHz, and $sinc^3$ filter with OSR = 256 (unless otherwise noted)

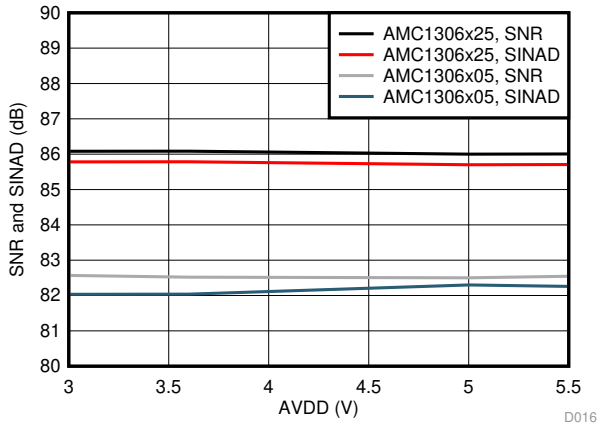

Figure 18. Signal-to-Noise Ratio and Signal-to-Noise + Distortion vs High-Side Supply Voltage

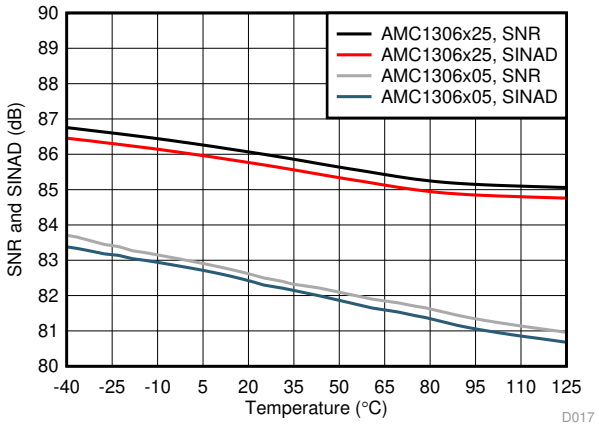

Figure 19. Signal-to-Noise Ratio and Signal-to-Noise + Distortion vs Temperature

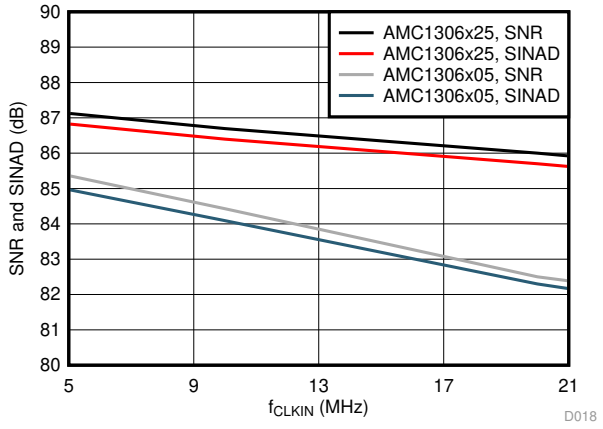

Figure 20. Signal-to-Noise Ratio and Signal-to-Noise + Distortion vs Clock Frequency

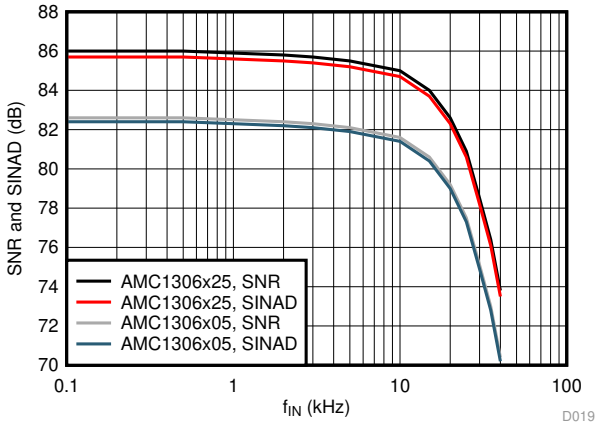

Figure 21. Signal-to-Noise Ratio and Signal-to-Noise + Distortion vs Input Signal Frequency

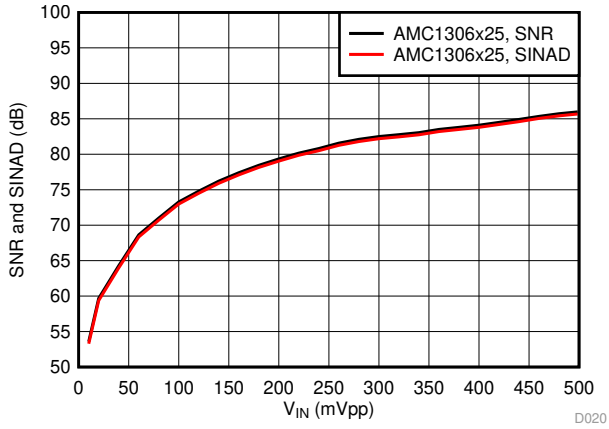

Figure 22. Signal-to-Noise Ratio and Signal-to-Noise + Distortion vs Input Signal Amplitude

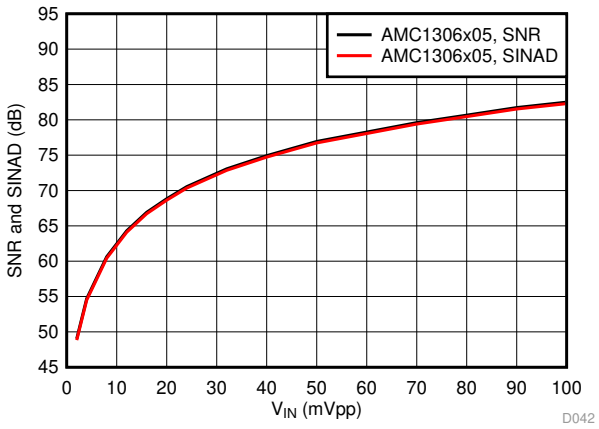

Figure 23. Signal-to-Noise Ratio and Signal-to-Noise + Distortion vs Input Signal Amplitude

Copyright © 2017–2020, Texas Instruments Incorporated

Typical Characteristics (continued)

at AVDD = 5 V, DVDD = 3.3 V, AINP = –50 mV to 50 mV (AMC1306x05) or –250 mV to 250 mV (AMC1306x25), AINN = AGND, f_{CLKIN} = 20 MHz, and sinc^3 filter with OSR = 256 (unless otherwise noted)

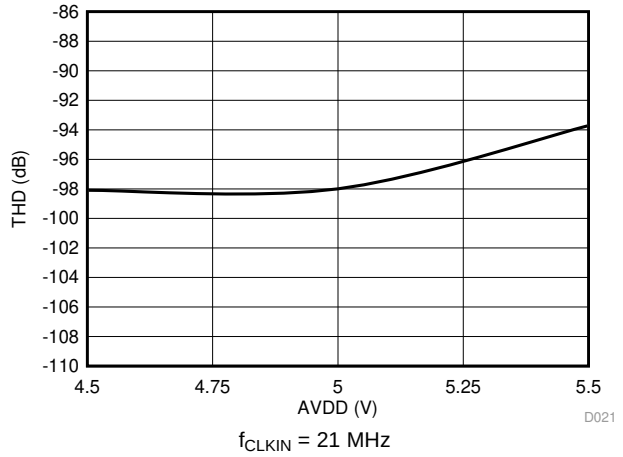

Figure 24. Total Harmonic Distortion vs High-Side Supply Voltage (5 V, nom)

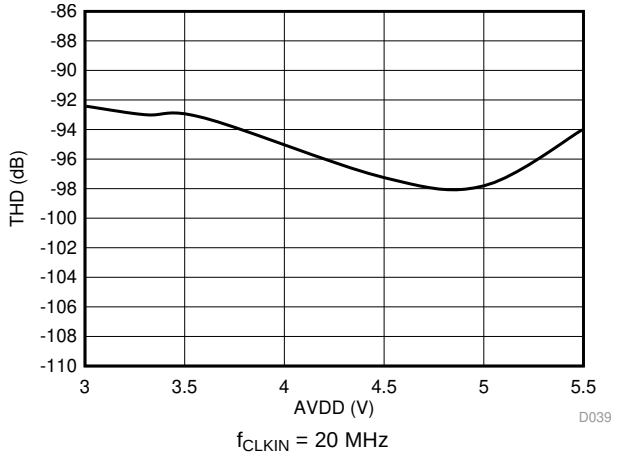

Figure 25. Total Harmonic Distortion vs High-Side Supply Voltage (3.3 V, nom)

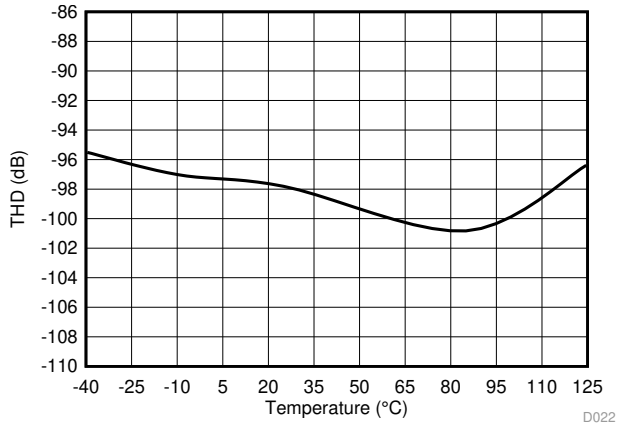

Figure 26. Total Harmonic Distortion vs Temperature

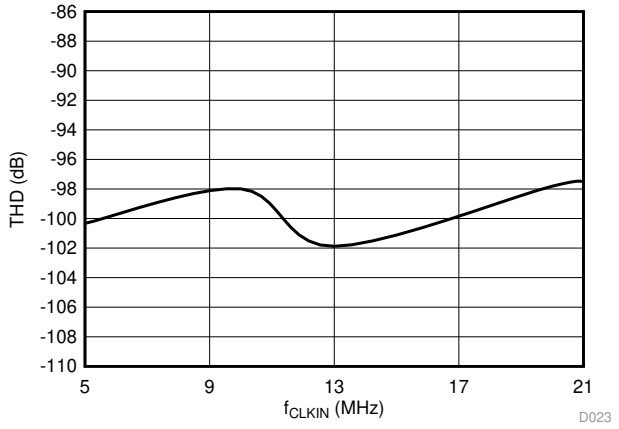

Figure 27. Total Harmonic Distortion vs Clock Frequency

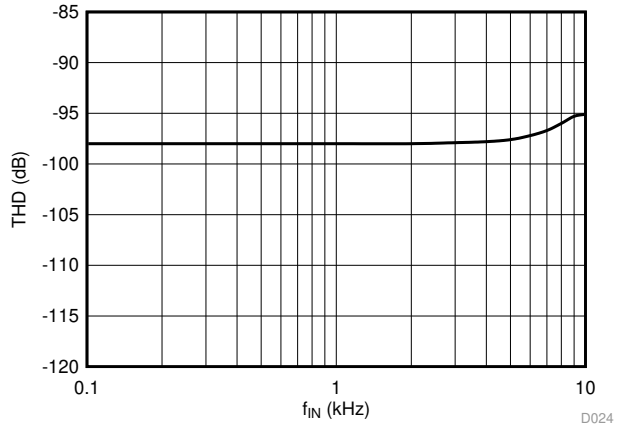

Figure 28. Total Harmonic Distortion vs Input Signal Frequency

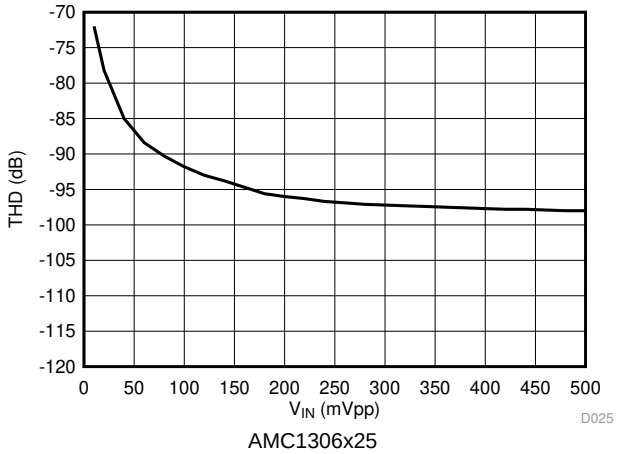

Figure 29. Total Harmonic Distortion vs Input Signal Amplitude

Typical Characteristics (continued)

at AVDD = 5 V, DVDD = 3.3 V, AINP = –50 mV to 50 mV (AMC1306x05) or –250 mV to 250 mV (AMC1306x25), AINN = AGND, f_{CLKIN} = 20 MHz, and $sinc^3$ filter with OSR = 256 (unless otherwise noted)

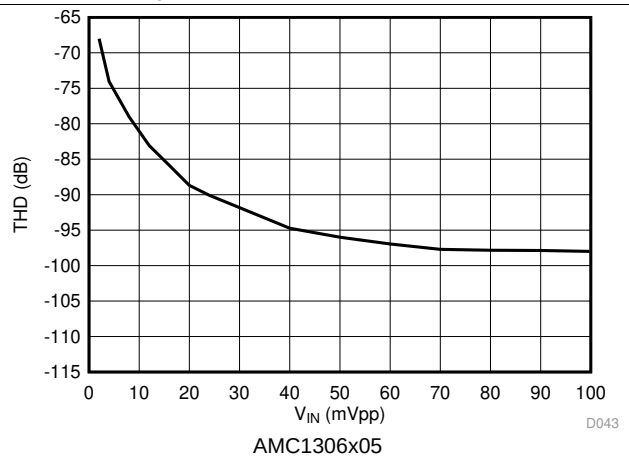

Figure 30. Total Harmonic Distortion vs Input Signal Amplitude

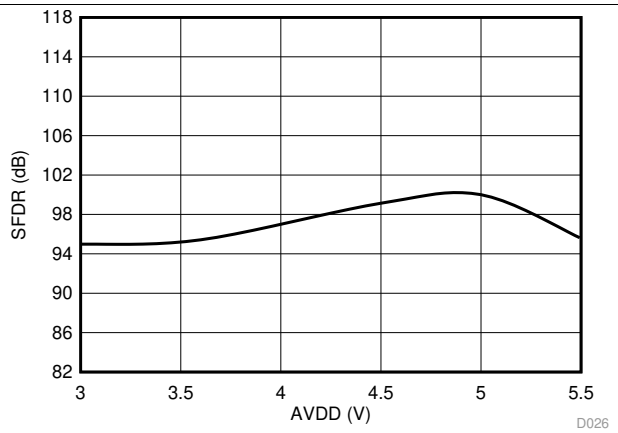

Figure 31. Spurious-Free Dynamic Range vs High-Side Supply Voltage

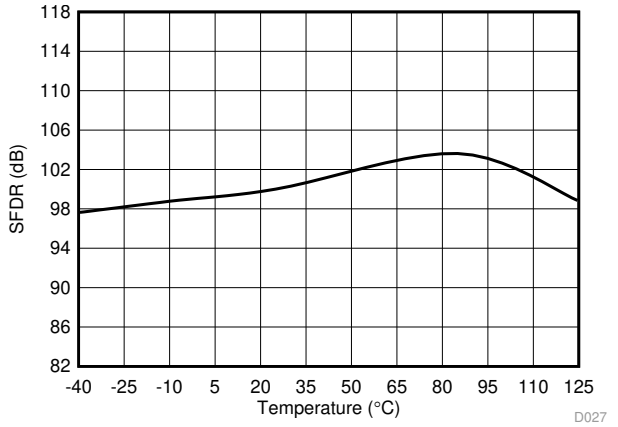

Figure 32. Spurious-Free Dynamic Range vs Temperature

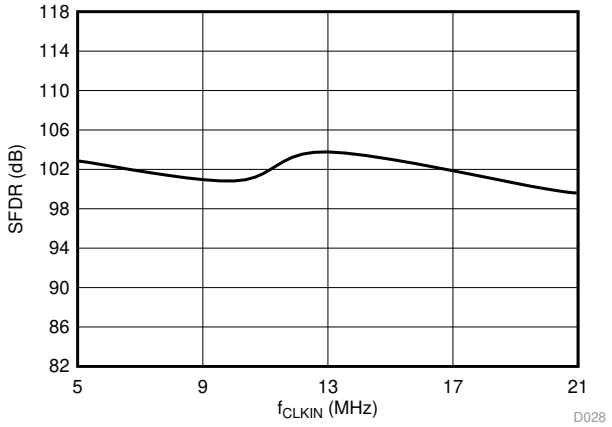

Figure 33. Spurious-Free Dynamic Range vs Clock Frequency

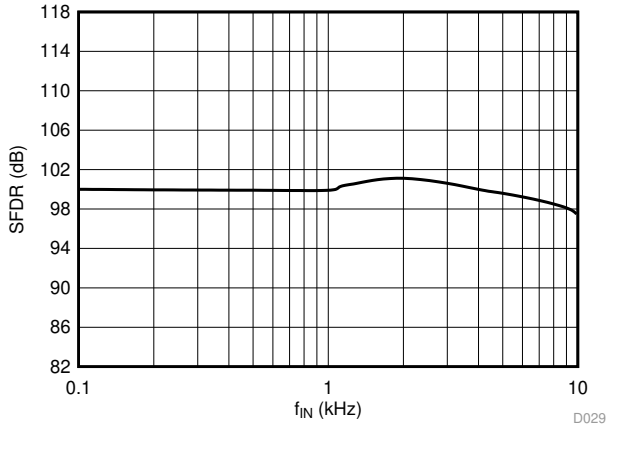

Figure 34. Spurious-Free Dynamic Range vs Input Signal Frequency

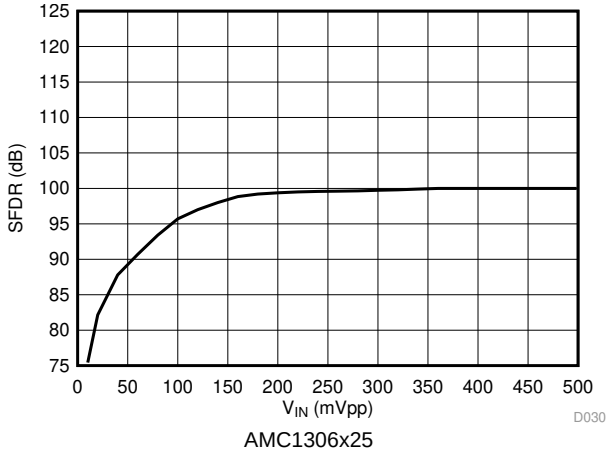

Figure 35. Spurious-Free Dynamic Range vs Input Signal Amplitude

Copyright © 2017–2020, Texas Instruments Incorporated

Typical Characteristics (continued)

at AVDD = 5 V, DVDD = 3.3 V, AINP = –50 mV to 50 mV (AMC1306x05) or –250 mV to 250 mV (AMC1306x25), AINN = AGND, f_{CLKIN} = 20 MHz, and $sinc^3$ filter with OSR = 256 (unless otherwise noted)

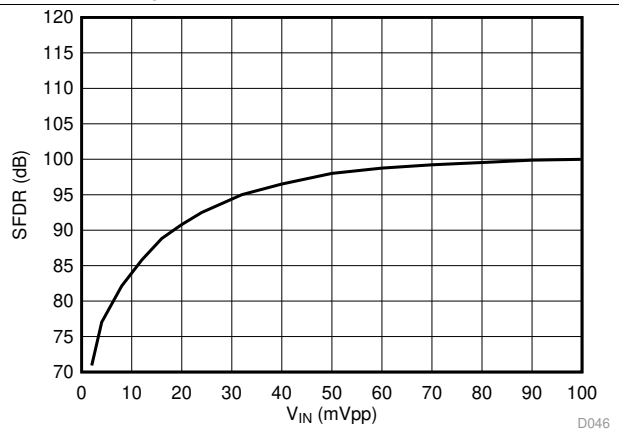

AMC1306x05

Figure 36. Spurious-Free Dynamic Range vs Input Signal Amplitude

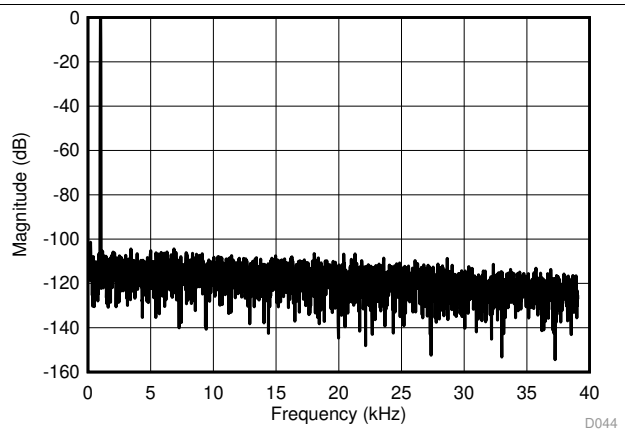

AMC1306x05, 4096-point FFT, V_{IN} = 100 mV_{PP}

Figure 37. Frequency Spectrum with 1-kHz Input Signal

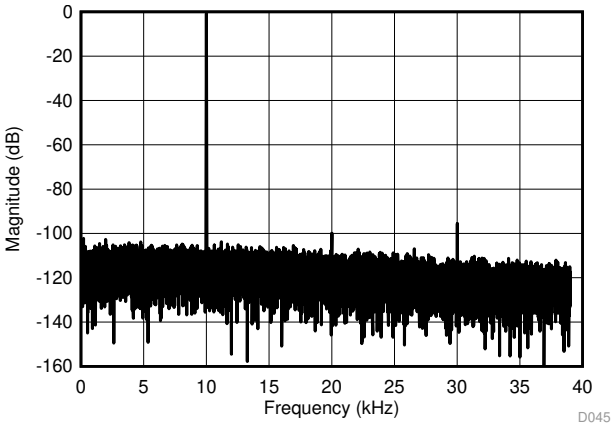

AMC1306x05, 4096-point FFT, V_{IN} = 100 mV_{PP}

Figure 38. Frequency Spectrum with 10-kHz Input Signal

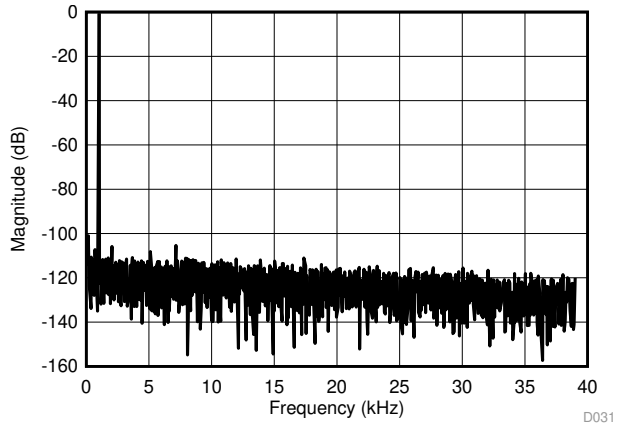

AMC1306x25, 4096-point FFT, V_{IN} = 500 mV_{PP}

Figure 39. Frequency Spectrum with 1-kHz Input Signal

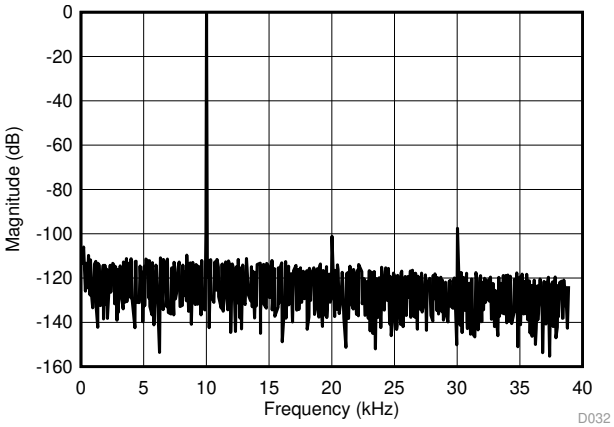

AMC1306x25, 4096-point FFT, V_{IN} = 500 mV_{PP}

Figure 40. Frequency Spectrum with 10-kHz Input Signal

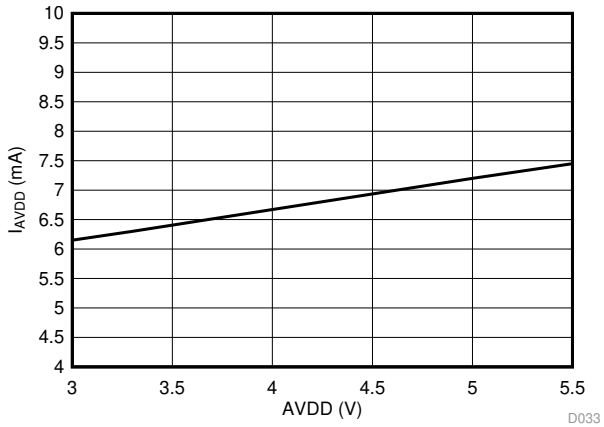

Figure 41. High-Side Supply Current vs High-Side Supply Voltage

Typical Characteristics (continued)

at AVDD = 5 V, DVDD = 3.3 V, AINP = –50 mV to 50 mV (AMC1306x05) or –250 mV to 250 mV (AMC1306x25), AINN = AGND, f_{CLKIN} = 20 MHz, and $sinc^3$ filter with OSR = 256 (unless otherwise noted)

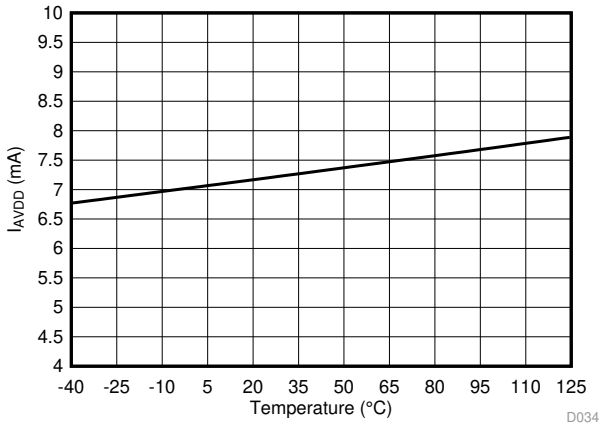

Figure 42. High-Side Supply Current vs Temperature

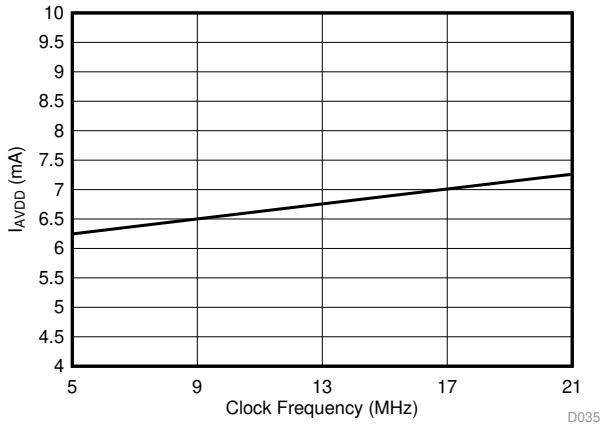

Figure 43. High-Side Supply Current vs Clock Frequency

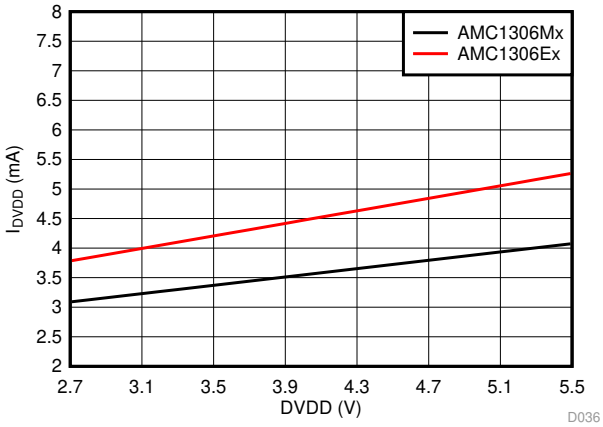

Figure 44. Controller-Side Supply Current vs Controller-Side Supply Voltage

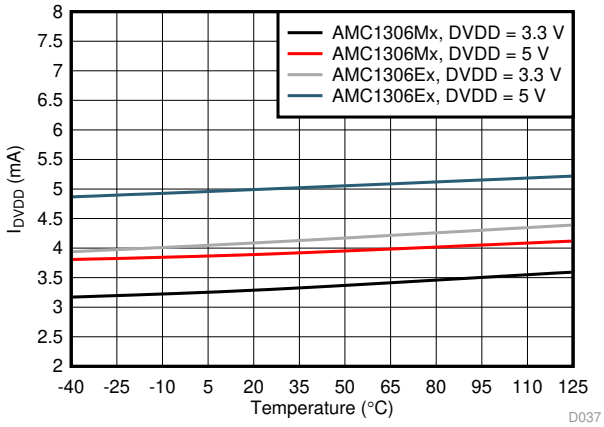

Figure 45. Controller-Side Supply Current vs Temperature

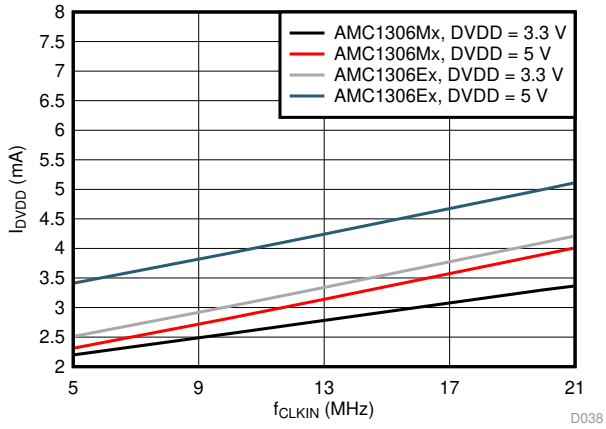

Figure 46. Controller-Side Supply Current vs Clock Frequency

Copyright © 2017–2020, Texas Instruments Incorporated

8 Detailed Description

8.1 Overview

The differential analog input (comprised of input signals AINP and AINN) of the AMC1306 is a fully-differential amplifier feeding the switched-capacitor input of a second-order, delta-sigma (ΔΣ) modulator stage that digitizes the input signal into a 1-bit output stream. The isolated data output DOUT of the converter provides a stream of digital ones and zeros that is synchronous to the externally-provided clock source at the CLKIN pin with a frequency in the range of 5 MHz to 21 MHz. The time average of this serial bitstream output is proportional to the analog input voltage.

The *Functional Block Diagram* section shows a detailed block diagram of the AMC1306. The analog input range is tailored to directly accommodate a voltage drop across a shunt resistor used for current sensing. The silicon-dioxide (SiO_2) based capacitive isolation barrier supports a high level of magnetic field immunity as described in the *ISO72x Digital Isolator Magnetic-Field Immunity* application report, available for download at www.ti.com. The external clock input simplifies the synchronization of multiple current-sensing channels on the system level. The extended frequency range of up to 21 MHz supports higher performance levels compared to the other solutions available on the market.

8.2 Functional Block Diagram

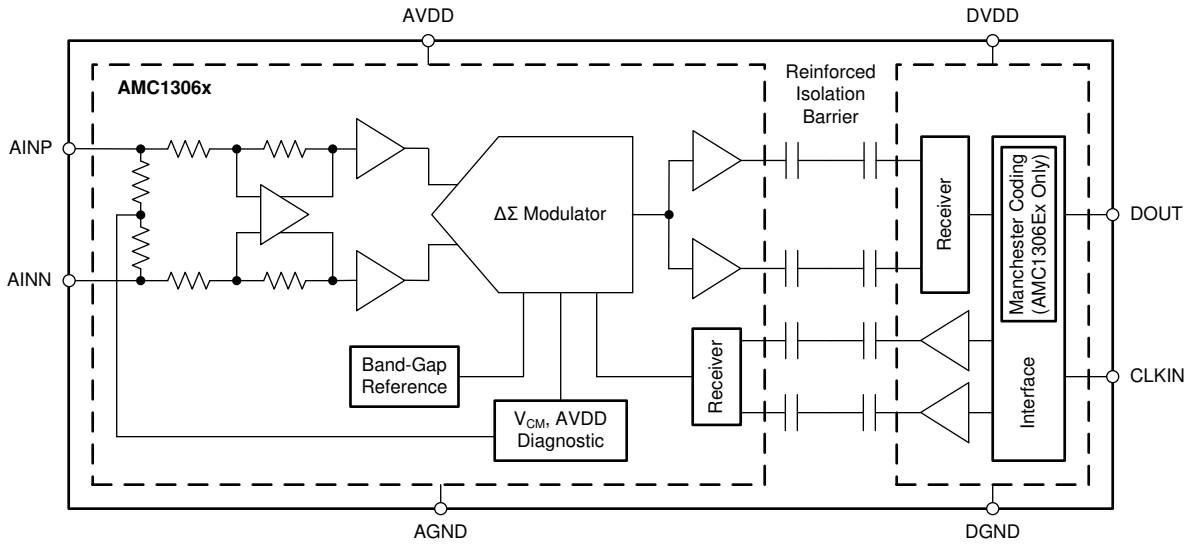

8.3 Feature Description

8.3.1 Analog Input

The AMC1306 incorporates front-end circuitry that contains a differential amplifier and a sampling stage, followed by a ΔΣ modulator. The gain of the differential amplifier is set by internal precision resistors to a factor of 4 for devices with a specified input voltage range of ±250 mV (this value is for the AMC1306x25), or to a factor of 20 in devices with a ±50-mV input voltage range (for the AMC1306x05), resulting in a differential input impedance of 4.9 kΩ (for the AMC1306x05) or 22 kΩ (for the AMC1306x25). For reduced offset and offset drift, the differential amplifier is chopper-stabilized with the switching frequency set at f_{CLKIN} / 32. The switching frequency generates a spur as shown in Figure 47.

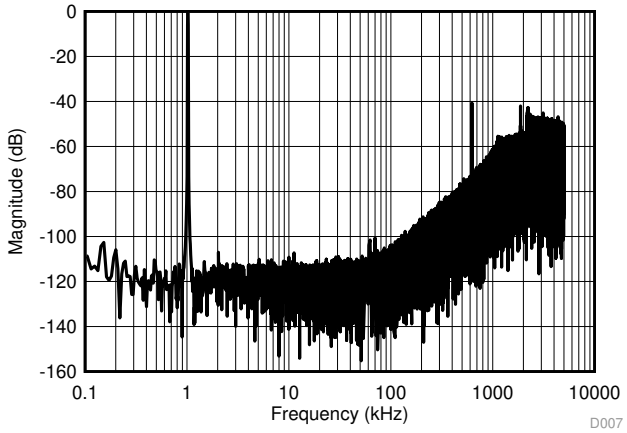

$sinc^3$ filter, OSR = 2, f_{CLKIN} = 20 MHz, f_{IN} = 1 kHz

Figure 47. Quantization Noise Shaping

Consider the input impedance of the AMC1306 in designs with high-impedance signal sources that can cause degradation of gain and offset specifications. The importance of this effect, however, depends on the desired system performance. Additionally, the input bias current caused by the internal common-mode voltage at the output of the differential amplifier is dependent on the actual amplitude of the input signal; see the *Isolated Voltage Sensing* section for more details on reducing these effects.

There are two restrictions on the analog input signals (AINP and AINN). First, if the input voltage exceeds the range AGND – 6 V to AVDD + 0.5 V, the input current must be limited to 10 mA because the device input electrostatic discharge (ESD) diodes turn on. In addition, the linearity and noise performance of the device are ensured only when the differential analog input voltage remains within the specified linear full-scale range (FSR), that is ±250 mV (for the AMC1306x25) or ±50 mV (for the AMC1306x05), and within the specified input common-mode range.

Copyright © 2017–2020, Texas Instruments Incorporated

Feature Description (continued)

8.3.2 Modulator

The modulator implemented in the AMC1306 is a second-order, switched-capacitor, feed-forward ΔΣ modulator, such as the one conceptualized in Figure 48. The analog input voltage V_{IN} and the output V_5 of the 1-bit digital-to-analog converter (DAC) are differentiated, providing an analog voltage V_1 at the input of the first integrator stage. The output of the first integrator feeds the input of the second integrator stage, resulting in output voltage V_3 that is differentiated with the input signal V_{IN} and the output of the first integrator V_2. Depending on the polarity of the resulting voltage V_4, the output of the comparator is changed. In this case, the 1-bit DAC responds on the next clock pulse by changing the associated analog output voltage V_5, causing the integrators to progress in the opposite direction and forcing the value of the integrator output to track the average value of the input.

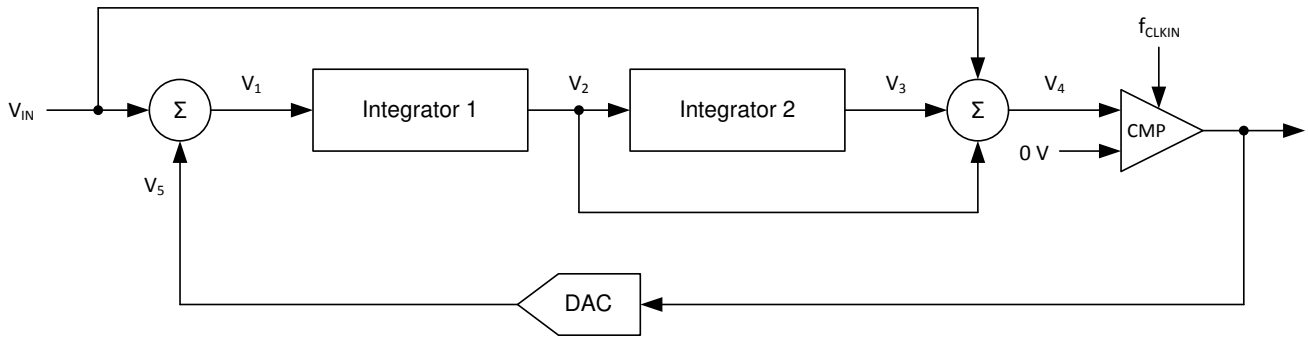

Figure 48. Block Diagram of a Second-Order Modulator

The modulator shifts the quantization noise to high frequencies, as shown in Figure 48. Therefore, use a low-pass digital filter at the output of the device to increase the overall performance. This filter is also used to convert from the 1-bit data stream at a high sampling rate into a higher-bit data word at a lower rate (decimation). TI's microcontroller families TMS320F2807x and TMS320F2837x offer a suitable programmable, hardwired filter structure termed a *sigma-delta filter module* (SDFM) optimized for usage with the AMC1306 family. Also, SD24_B converters on the MSP430F677x microcontrollers offer a path to directly access the integrated sinc-filters for a simple system-level solution for multichannel, isolated current sensing. An additional option is to use a suitable application-specific device, such as the AMC1210 (a four-channel digital sinc-filter). Alternatively, a field-programmable gate array (FPGA) can be used to implement the filter.

Feature Description (continued)

8.3.3 Isolation Channel Signal Transmission

The AMC1306 device uses an on-off keying (OOK) modulation scheme to transmit the modulator output bitstream across the capacitive SiO_2-based isolation barrier. The transmitter modulates the bitstream at TX IN in Figure 49 with an internally-generated, 480-MHz carrier across the isolation barrier to represent a digital *one* and sends a *no signal* to represent the digital *zero*. The receiver demodulates the signal after advanced signal conditioning and produces the output. The symmetrical design of each isolation channel improves the CMTI performance and reduces the radiated emissions caused by the high-frequency carrier. The block diagram of an isolation channel integrated in the AMC1306 is shown in Figure 49.

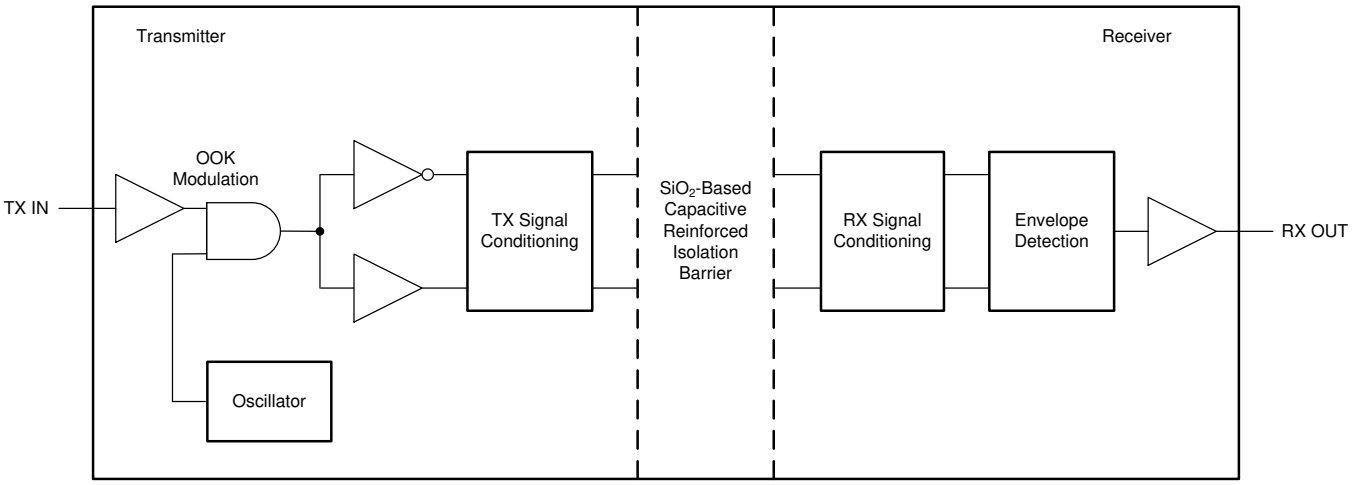

Figure 49. Block Diagram of an Isolation Channel

Figure 50 shows the concept of the on-off keying scheme.

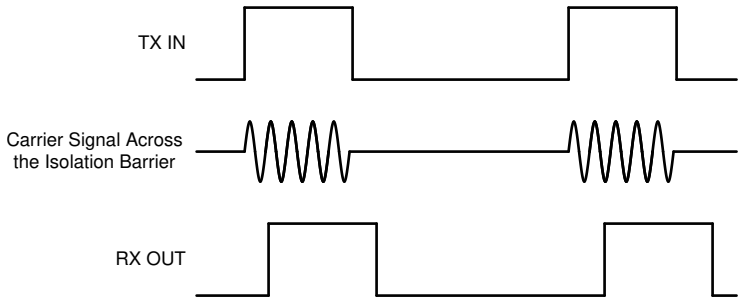

Figure 50. OOK-Based Modulation Scheme

Copyright © 2017–2020, Texas Instruments Incorporated

Feature Description (continued)

8.3.4 Digital Output

A differential input signal of 0 V ideally produces a stream of ones and zeros that are high 50% of the time. A differential input of 250 mV (for the AMC1306x25) or 50 mV (for the AMC1306x05) produces a stream of ones and zeros that are high 89.06% of the time. With 16 bits of resolution, that percentage ideally corresponds to the code 58368. A differential input of –250 mV (–50 mV for the AMC1306x05) produces a stream of ones and zeros that are high 10.94% of the time and ideally results in code 7168 with 16-bit resolution. These input voltages are also the specified linear ranges of the different AMC1306 versions with performance as specified in this document. If the input voltage value exceeds these ranges, the output of the modulator shows nonlinear behavior when the quantization noise increases. The output of the modulator clips with a stream of only zeros with an input less than or equal to –320 mV (–64 mV for the AMC1306x05) or with a stream of only ones with an input greater than or equal to 320 mV (64 mV for the AMC1306x05). In this case, however, the AMC1306 generates a single 1 (if the input is at negative full-scale) or 0 every 128 clock cycles to indicate proper device function (see the *Fail-Safe Output* section for more details). The input voltage versus the output modulator signal is shown in Figure 51.

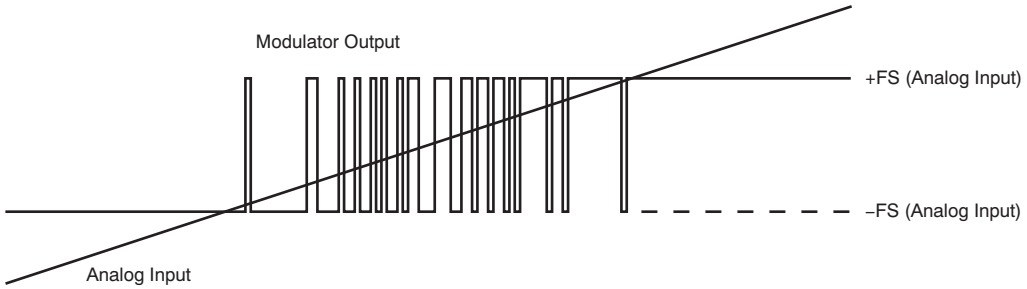

Figure 51. Analog Input versus the AMC1306 Modulator Output

The density of ones in the output bitstream for any input voltage value (with the exception of a full-scale input signal, as described in the *Output Behavior in Case of a Full-Scale Input* section) can be calculated using Equation 1:

$$\frac{V_{IN} + V_{Clipping}}{2 \times V_{Clipping}} \tag{1}$$

The AMC1306 system clock is provided externally at the CLKIN pin. For more details, see the *Switching Characteristics* table and the *Manchester Coding Feature* section.

8.3.5 Manchester Coding Feature

The AMC1306Ex offers the IEEE 802.3-compliant Manchester coding feature that generates at least one transition per bit to support clock signal recovery from the bitstream. A Manchester coded bitstream is free of dc components. The Manchester coding combines the clock and data information using exclusive or (XOR) logical operation and results in a bitstream as shown in Figure 52. The duty cycle of the Manchester encoded bitstream depends on the duty cycle of the input clock CLKIN.

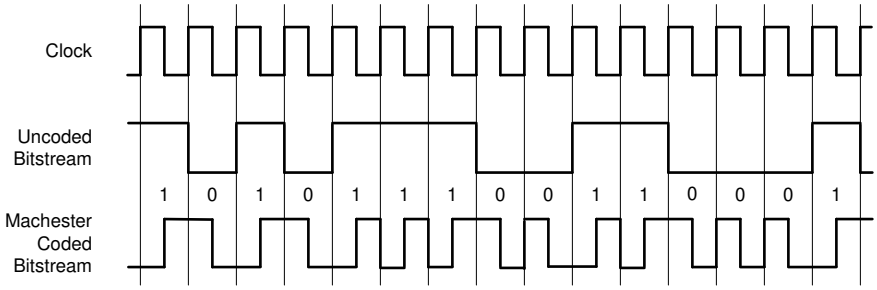

Figure 52. Manchester Coded Output of the AMC1306Ex

8.4 Device Functional Modes

8.4.1 Fail-Safe Output

In the case of a missing high-side supply voltage AVDD, the output of a ΔΣ modulator is not defined and can cause a system malfunction. In systems with high safety requirements, this behavior is not acceptable. Therefore, the AMC1306 implements a fail-safe output function that ensures that the output DOUT of the device offers a steady-state bitstream of logic 0's in case of a missing AVDD, as shown in Figure 53.

Additionally, if the common-mode voltage of the input reaches or exceeds the specified common-mode overvoltage detection level V_{CMov} as defined in the *Electrical Characteristics* table, the AMC1306 offers a steady-state bitstream of logic 1's at the output DOUT, as also shown in Figure 53.

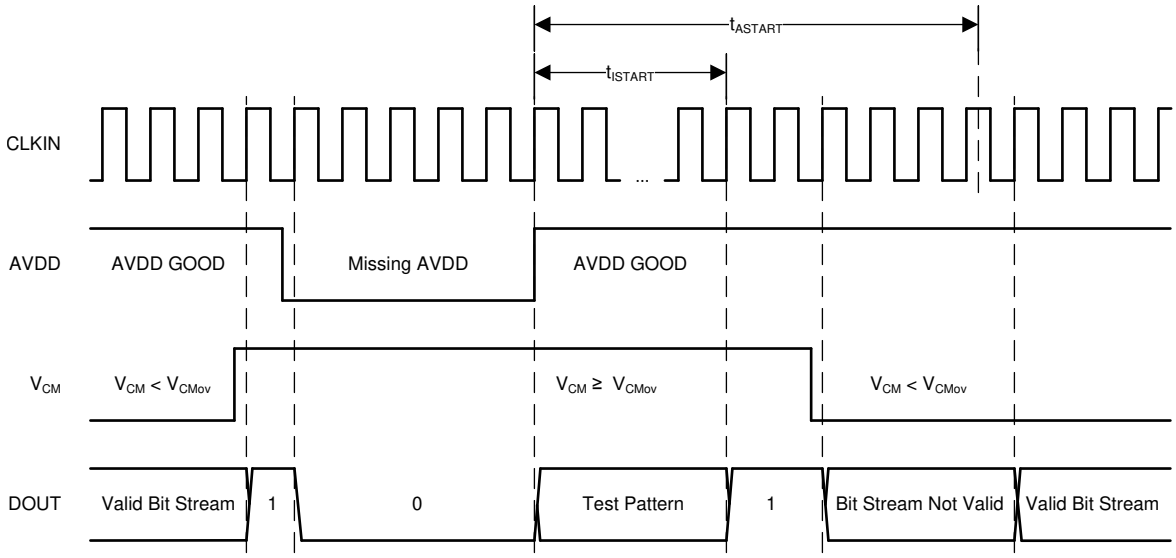

Figure 53. Fail-Safe Output of the AMC1306

8.4.2 Output Behavior in Case of a Full-Scale Input

If a full-scale input signal is applied to the AMC1306 (that is, $V_{IN} \geq V_{Clipping}$), the device generates a single one or zero every 128 bits at DOUT, depending on the actual polarity of the signal being sensed, as shown in Figure 54. In this way, differentiating between a missing AVDD and a full-scale input signal is possible on the system level.

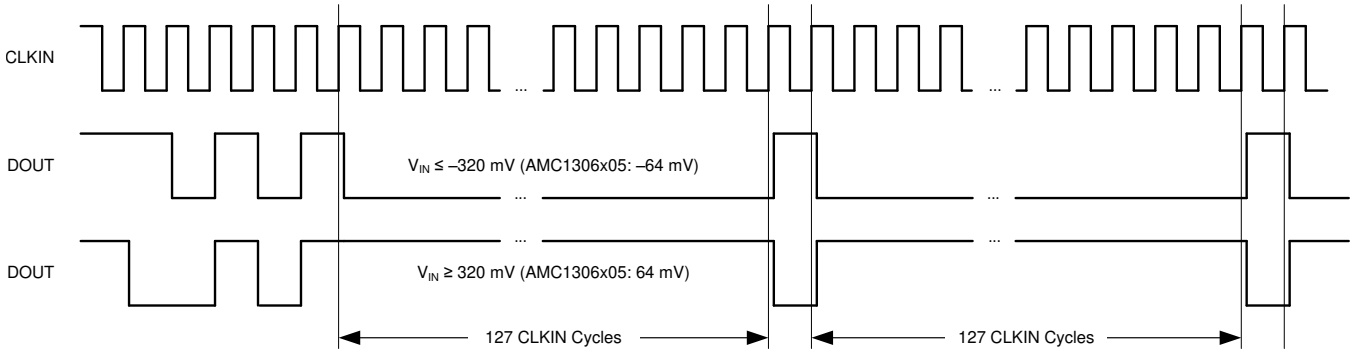

Figure 54. Overrange Output of the AMC1306

Copyright © 2017–2020, Texas Instruments Incorporated

9 Application and Implementation

NOTE

Information in the following applications sections is not part of the TI component specification, and TI does not warrant its accuracy or completeness. TI's customers are responsible for determining suitability of components for their purposes. Customers should validate and test their design implementation to confirm system functionality.

9.1 Application Information

9.1.1 Digital Filter Usage

The modulator generates a bitstream that is processed by a digital filter to obtain a digital word similar to a conversion result of a conventional analog-to-digital converter (ADC). A very simple filter, built with minimal effort and hardware, is a sinc^3-type filter, as shown in Equation 2:

$$H(z) = \left(\frac{1 - z^{-OSR}}{1 - z^{-1}}\right)^3 \tag{2}$$

This filter provides the best output performance at the lowest hardware size (count of digital gates) for a second-order modulator. All the characterization in this document is also done with a sinc^3 filter with an oversampling ratio (OSR) of 256 and an output word width of 16 bits.

The effective number of bits (ENOB) is often used to compare the performance of ADCs and ΔΣ modulators. Figure 55 shows the ENOB of the AMC1306 with different oversampling ratios. In this document, this number is calculated from the SINAD by using Equation 3:

$$\text{SINAD} = 1.76\ \text{dB} + 6.02\ \text{dB} \times \text{ENOB} \tag{3}$$

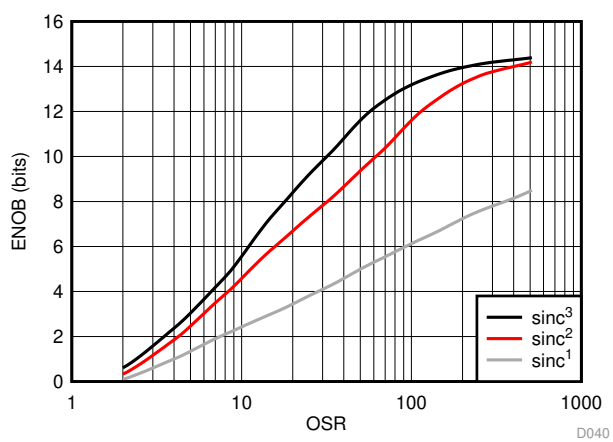

Figure 55. Measured Effective Number of Bits versus Oversampling Ratio

An example code for implementing a sinc^3 filter in an FPGA is discussed in the *Combining the ADS1202 with an FPGA Digital Filter for Current Measurement in Motor Control Applications* application note, available for download at www.ti.com.

9.2 Typical Applications

9.2.1 Frequency Inverter Application

Isolated ΔΣ modulators are being widely used in frequency inverter designs because of their high ac and dc performance. Frequency inverters are critical parts of industrial motor drives, photovoltaic inverters (string and central inverters), uninterruptible power supplies (UPS), electrical and hybrid electrical vehicles, and other industrial applications.

Figure 56 shows a simplified schematics of the AMC1306Mx in a typical frequency inverter application as used in industrial motor drives with shunt resistors (R_{SHUNT}) used for current sensing. Depending on the system design, either all three or only two motor phase currents are sensed.

The Manchester coded bitstream output of the AMC1306Ex minimizes the wiring efforts of the connection between the power board and the control board; see Figure 57. This bitstream output also allows the clock to be generated locally on the power board without the having to adjust the propagation delay time of each DOUT connection to fulfill the setup and hold time requirements of the microcontroller.

In both examples, an additional fourth AMC1306 is used to support isolated voltage sensing of the dc link. This high voltage is reduced using a high-impedance resistive divider and is sensed by the device across a smaller resistor. The value of this resistor can degrade the performance of the measurement, as described in the *Isolated Voltage Sensing* section.

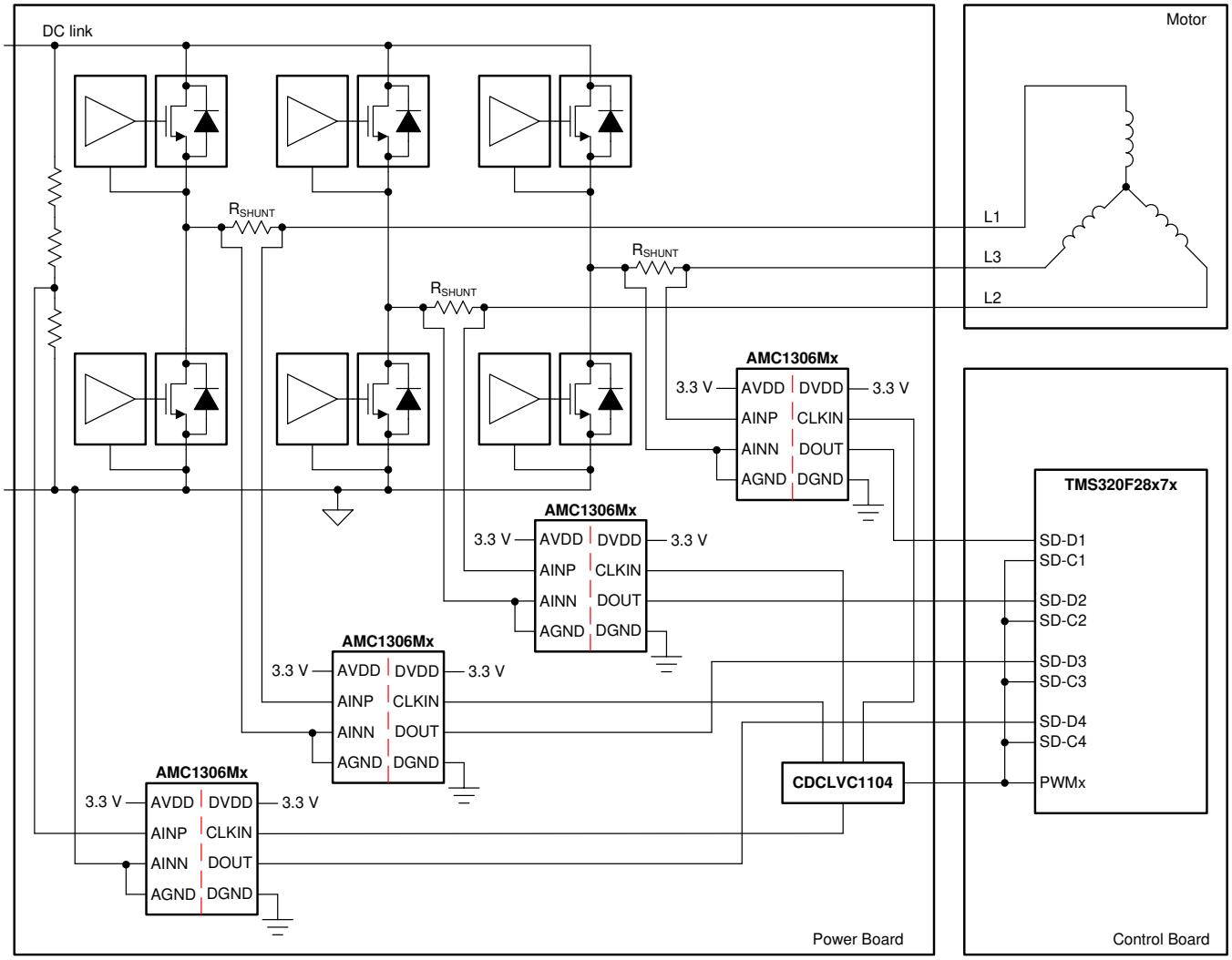

Figure 56. The AMC1306Mx in a Frequency Inverter Application

Copyright © 2017–2020, Texas Instruments Incorporated

Typical Applications (continued)

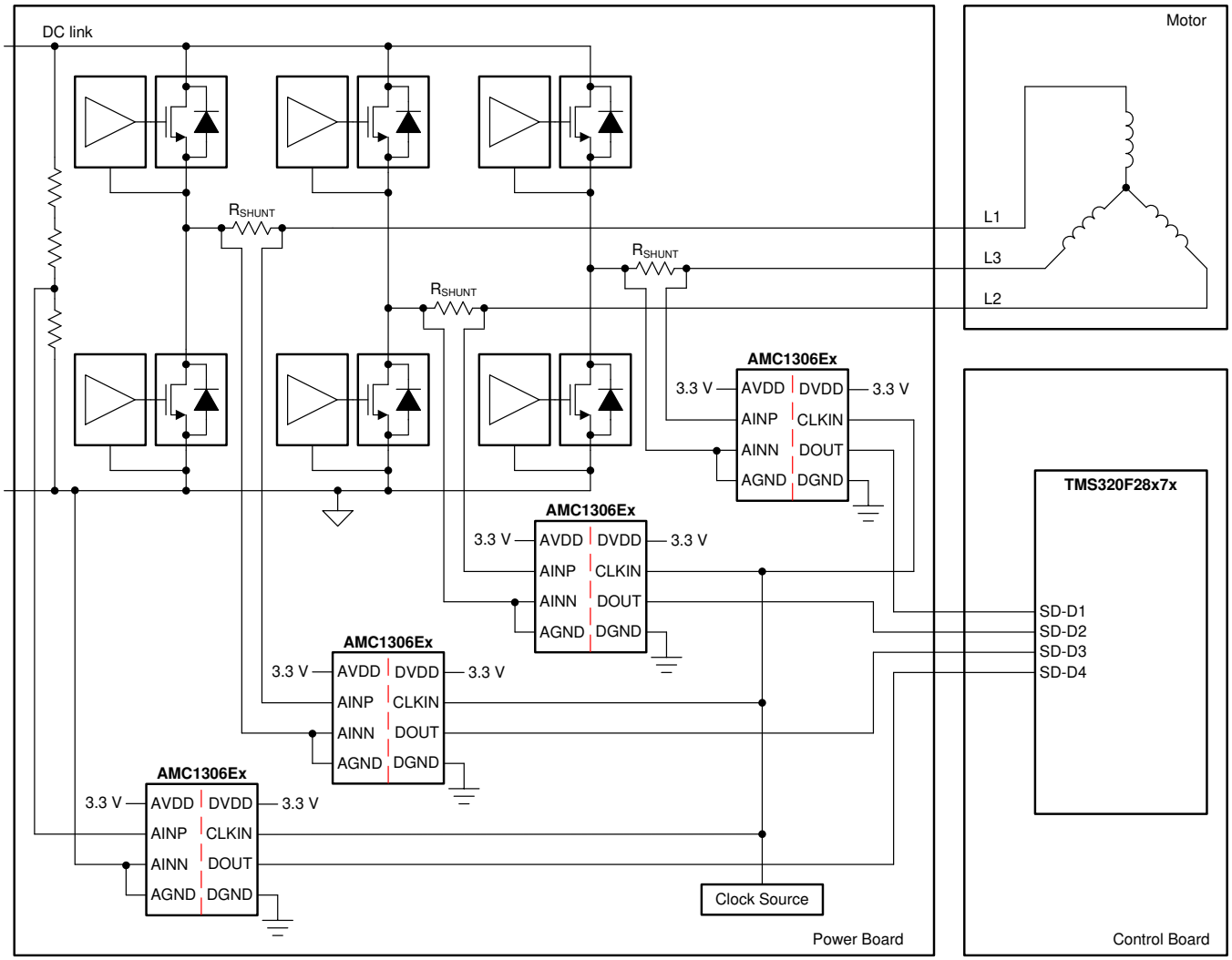

Figure 57. The AMC1306Ex in a Frequency Inverter Application

9.2.1.1 Design Requirements

Table 1 lists the parameters for the typical application in the *Frequency Inverter Application* section.

Table 1. Design Requirements

PARAMETER	VALUE
High-side supply voltage	3.3 V or 5 V
Low-side supply voltage	3.3 V or 5 V
Voltage drop across the shunt for a linear response	±250 mV (maximum)

9.2.1.2 Detailed Design Procedure

The high-side power supply (AVDD) for the AMC1306 device is derived from the power supply of the upper gate driver. Further details are provided in the *Power Supply Recommendations* section.

The floating ground reference (AGND) is derived from one of the ends of the shunt resistor that is connected to the negative input of the AMC1306 (AINN). If a four-pin shunt is used, the inputs of the device are connected to the inner leads and AGND is connected to one of the outer shunt leads.

Use Ohm's Law to calculate the voltage drop across the shunt resistor (V_{SHUNT}) for the desired measured current: $V_{SHUNT} = I \times R_{SHUNT}$.

Consider the following two restrictions to choose the proper value of the shunt resistor R_{SHUNT}:

- The voltage drop caused by the nominal current range must not exceed the recommended differential input voltage range: $V_{SHUNT} \leq \pm 250$ mV
- The voltage drop caused by the maximum allowed overcurrent must not exceed the input voltage that causes a clipping output: $|V_{SHUNT}| \leq |V_{Clipping}|$

The typically recommended RC filter in front of a ΔΣ modulator to improve signal-to-noise performance of the signal path is not required for the AMC1306. By design, the input bandwidth of the analog front-end of the device is limited as specified in the *Electrical Characteristics* table.

For modulator output bitstream filtering, a device from TI's TMS320F2807x family of low-cost microcontrollers (MCUs) or TMS320F2837x family of dual-core MCUs is recommended. These families support up to eight channels of dedicated hardwired filter structures that significantly simplify system level design by offering two filtering paths per channel: one providing high accuracy results for the control loop and one fast response path for overcurrent detection.

9.2.1.3 Application Curve

In motor control applications, a very fast response time for overcurrent detection is required. The time for fully settling the filter in case of a step-signal at the input of the modulator depends on the filter order; that is, a $sinc^3$ filter requires three data updates for full settling (with $f_{DATA} = f_{CLK}$ / OSR). Therefore, for overcurrent protection, filter types other than $sinc^3$ can be a better choice; an alternative is the $sinc^2$ filter. Figure 58 compares the settling times of different filter orders.

The delay time of the sinc filter with a continuous signal is half of the settling time.

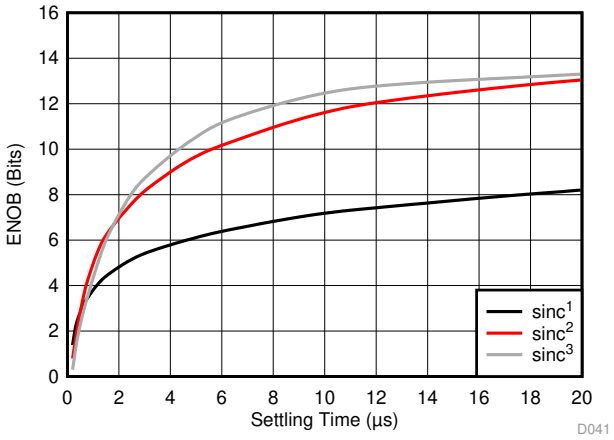

Figure 58. Measured Effective Number of Bits versus Settling Time

Copyright © 2017–2020, Texas Instruments Incorporated

9.2.2 Isolated Voltage Sensing

The AMC1306 is optimized for usage in current-sensing applications using low-impedance shunts. However, the device can also be used in isolated voltage-sensing applications if the affect of the (usually higher) impedance of the resistor used in this case is considered.

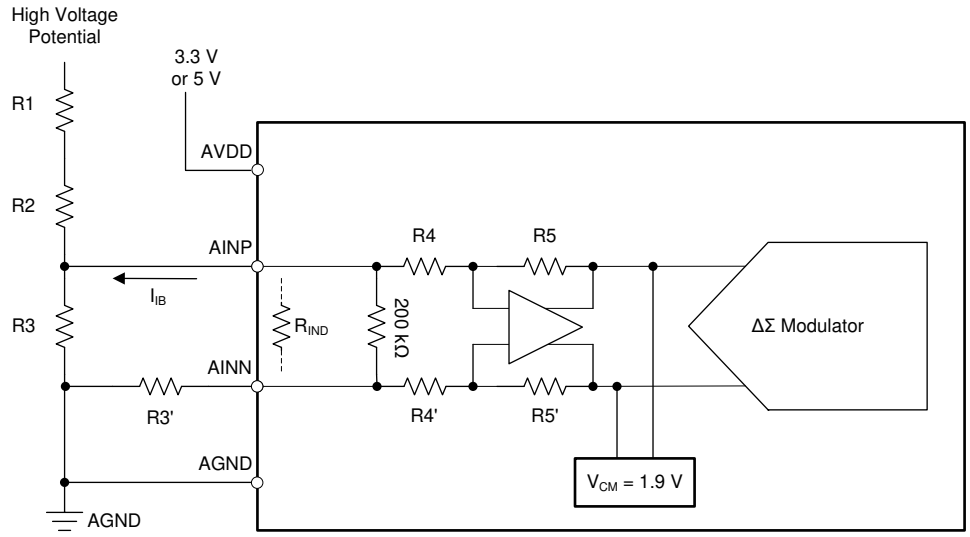

Figure 59. Using the AMC1306 for Isolated Voltage Sensing

9.2.2.1 Design Requirements

Figure 59 shows a simplified circuit typically used in high-voltage-sensing applications. The high impedance resistors (R1 and R2) are used as voltage dividers and dominate the current value definition. The resistance of the sensing resistor R3 is chosen to meet the input voltage range of the AMC1306. This resistor and the differential input impedance of the device (the AMC1306x25 is 22 kΩ, the AMC1306x05 is 4.9 kΩ) also create a voltage divider that results in an additional gain error. With the assumption of R1, R2, and R_{IN} having a considerably higher value than R3, the resulting total gain error can be estimated using Equation 4, with E_G being the gain error of the AMC1306.

$$\left|E_{Gtot}\right| = \left|E_G\right| + \frac{R3}{R_{IN}} \tag{4}$$

This gain error can be easily minimized during the initial system-level gain calibration procedure.

9.2.2.2 Detailed Design Procedure

As indicated in Figure 59, the output of the integrated differential amplifier is internally biased to a common-mode voltage of 1.9 V. This voltage results in a bias current I_{IB} through the resistive network R4 and R5 (or R4' and R5') used for setting the gain of the amplifier. The value range of this current is specified in the *Electrical Characteristics* table. This bias current generates additional offset error that depends on the value of the resistor R3. The initial system offset calibration does not minimize this effect because the value of the bias current depends on the actual common-mode amplitude of the input signal (as illustrated in Figure 60). Therefore, in systems with high accuracy requirements, a series resistor is recommended to be used at the negative input (AINN) of the AMC1306 with a value equal to the shunt resistor R3 (that is, R3' = R3 in Figure 59) to eliminate the effect of the bias current.

This additional series resistor (R3') influences the gain error of the circuit. The effect can be calculated using Equation 5 with R5 = R5' = 50 kΩ and R4 = R4' = 2.5 kΩ (for the AMC1306x05) or 12.5 kΩ (for the AMC1306x25).

$$E_G(\%) = \left(1 - \frac{R4}{R4' + R3'}\right) \times 100\% \tag{5}$$

9.2.2.3 Application Curve

Figure 60 shows the dependency of the input bias current on the common-mode voltage at the input of the AMC1306.

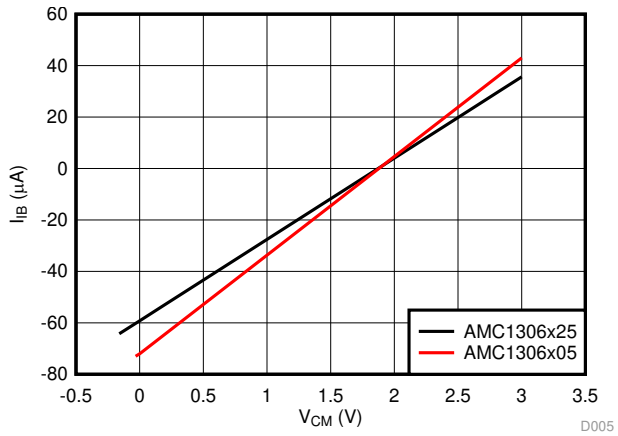

Figure 60. Input Bias Current vs Common-Mode Input Voltage

9.2.3 What To Do and What Not To Do

Do not leave the inputs of the AMC1306 unconnected (floating) when the device is powered up. If both modulator inputs are left floating, the input bias current drives these inputs to the output common-mode of the analog front-end of approximately 1.9 V. If that voltage is above the specified input common-mode range, the front gain diminishes and the modulator outputs a bitstream resembling a zero input differential voltage.

Copyright © 2017–2020, Texas Instruments Incorporated

10 Power Supply Recommendations

In a typical frequency-inverter application, the high-side power supply (AVDD) for the device is directly derived from the floating power supply of the upper gate driver. For lowest system-level cost, a Zener diode can be used to limit the voltage to 5 V or 3.3 V (±10%). Alternatively a low-cost low-drop regulator (LDO), for example the LM317-N, can be used to adjust the supply voltage level and minimize noise on the power-supply node. A low-ESR decoupling capacitor of 0.1 µF is recommended for filtering this power-supply path. Place this capacitor (C2 in Figure 61) as close as possible to the AVDD pin of the AMC1306 for best performance. If better filtering is required, an additional 10-µF capacitor can be used.

The floating ground reference (AGND) is derived from the end of the shunt resistor that is connected to the negative input (AINN) of the device. If a four-pin shunt is used, the device inputs are connected to the inner leads and AGND is connected to one of the outer leads of the shunt.

For decoupling of the digital power supply on the controller side, a 0.1-µF capacitor is recommended to be placed as close to the DVDD pin of the AMC1306 as possible, followed by an additional capacitor in the range of 1 µF to 10 µF.

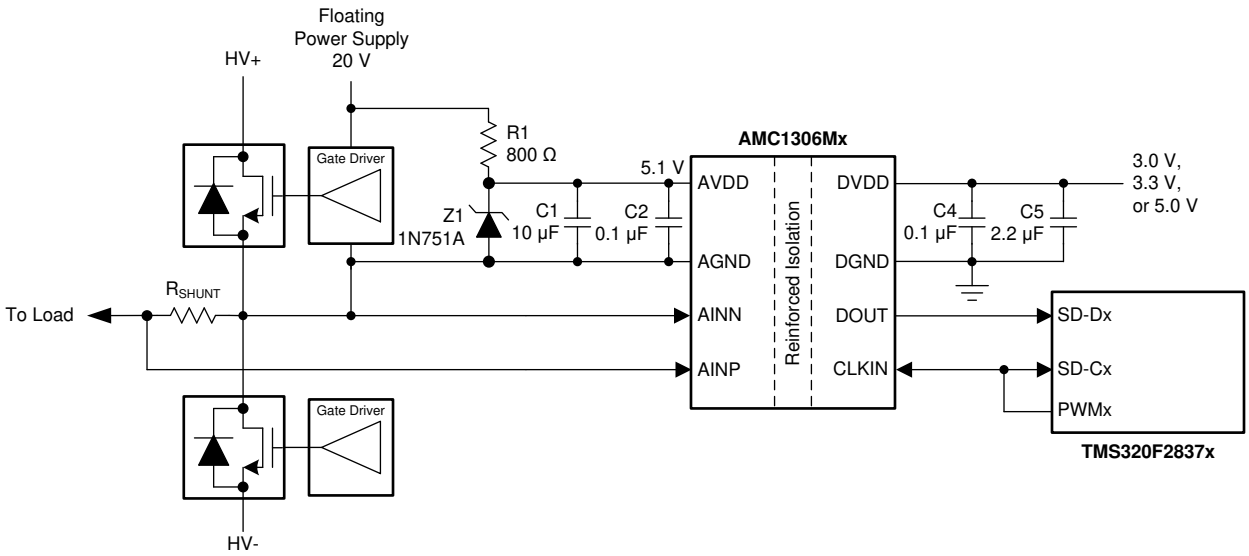

Figure 61. Decoupling the AMC1306

11 Layout

11.1 Layout Guidelines

A layout recommendation showing the critical placement of the decoupling capacitors (as close as possible to the AMC1306) and placement of the other components required by the device is shown in Figure 62. For best performance, place the shunt resistor close to the AINP and AINN inputs of the AMC1306 and keep the layout of both connections symmetrical.

11.2 Layout Example

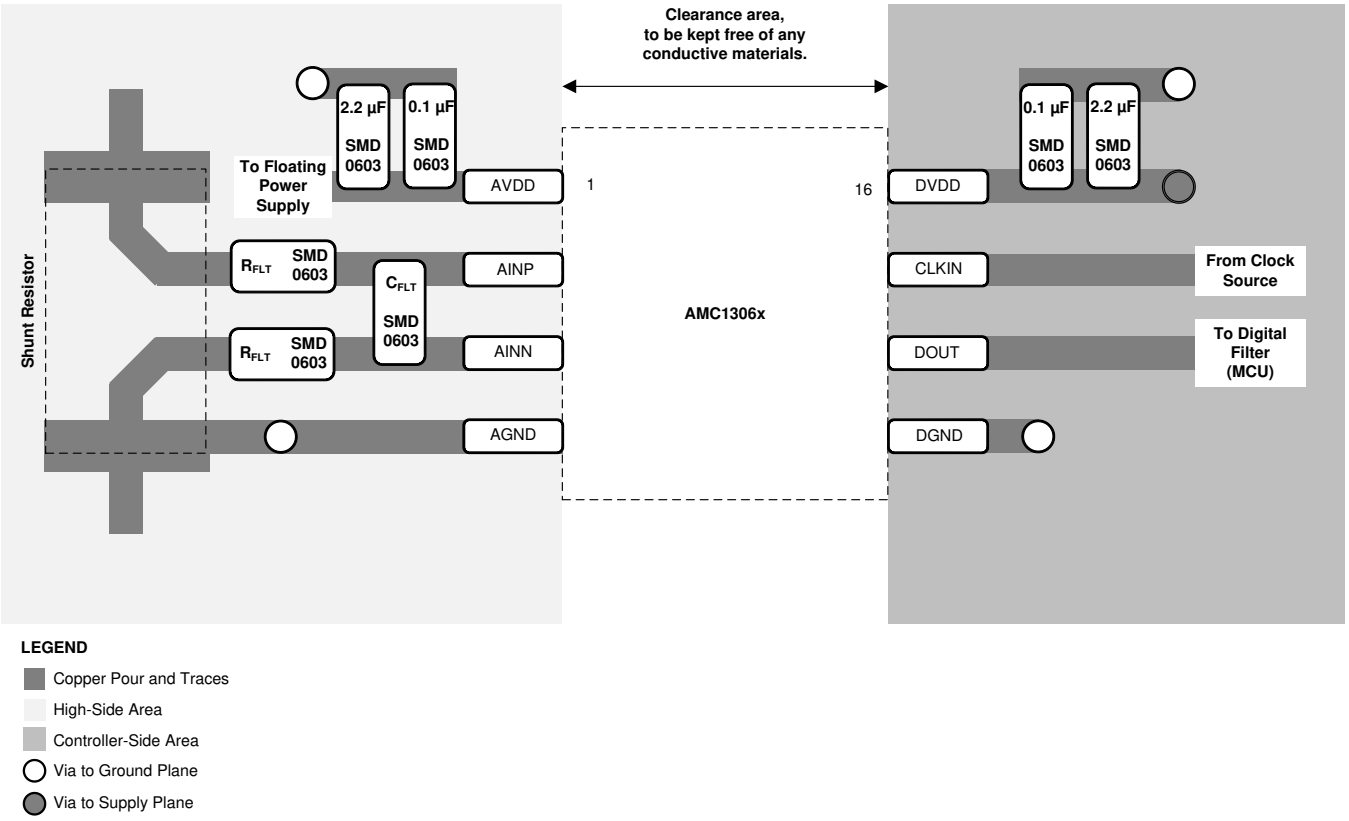

Figure 62. Recommended Layout of the AMC1306x

Copyright © 2017–2020, Texas Instruments Incorporated

12 Device and Documentation Support

12.1 Device Support

12.1.1 Device Nomenclature

12.1.1.1 Isolation Glossary

See the *Isolation Glossary*

12.2 Documentation Support

12.2.1 Related Documentation

For related documentation see the following:

- *AMC1210 Quad Digital Filter for 2nd-Order Delta-Sigma Modulator*
- *MSP430F677x Polyphase Metering SoCs*
- *TMS320F2807x Piccolo™ Microcontrollers*
- *TMS320F2837xD Dual-Core Delfino™ Microcontrollers*
- *ISO72x Digital Isolator Magnetic-Field Immunity*
- *Combining the ADS1202 with an FPGA Digital Filter for Current Measurement in Motor Control Applications*
- *CDCLVC11xx 3.3-V and 2.5-V LVCMOS High-Performance Clock Buffer Family*

12.3 Related Links

The table below lists quick access links. Categories include technical documents, support and community resources, tools and software, and quick access to order now.

Table 2. Related Links

PARTS	PRODUCT FOLDER	ORDER NOW	TECHNICAL DOCUMENTS	TOOLS & SOFTWARE	SUPPORT & COMMUNITY
AMC1306E05	Click here	Click here	Click here	Click here	Click here
AMC1306E25	Click here	Click here	Click here	Click here	Click here
AMC1306M05	Click here	Click here	Click here	Click here	Click here
AMC1306M25	Click here	Click here	Click here	Click here	Click here

12.4 Receiving Notification of Documentation Updates

To receive notification of documentation updates, navigate to the device product folder on ti.com. In the upper right corner, click on *Alert me* to register and receive a weekly digest of any product information that has changed. For change details, review the revision history included in any revised document.

12.5 Community Resources

TI E2E™ support forums are an engineer's go-to source for fast, verified answers and design help — straight from the experts. Search existing answers or ask your own question to get the quick design help you need.

Linked content is provided "AS IS" by the respective contributors. They do not constitute TI specifications and do not necessarily reflect TI's views; see TI's Terms of Use.

12.6 Trademarks

E2E is a trademark of Texas Instruments.
All other trademarks are the property of their respective owners.

12.7 Electrostatic Discharge Caution

This integrated circuit can be damaged by ESD. Texas Instruments recommends that all integrated circuits be handled with appropriate precautions. Failure to observe proper handling and installation procedures can cause damage.

ESD damage can range from subtle performance degradation to complete device failure. Precision integrated circuits may be more susceptible to damage because very small parametric changes could cause the device not to meet its published specifications.

12.8 Glossary

SLYZ022 — *TI Glossary*.

This glossary lists and explains terms, acronyms, and definitions.

13 Mechanical, Packaging, and Orderable Information

The following pages include mechanical, packaging, and orderable information. This information is the most current data available for the designated devices. This data is subject to change without notice and revision of this document. For browser-based versions of this data sheet, refer to the left-hand navigation.

Copyright © 2017–2020, Texas Instruments Incorporated

PACKAGING INFORMATION

Orderable Device	Status (1)	Package Type	Package Drawing	Pins	Package Qty	Eco Plan (2)	Lead/Ball Finish (6)	MSL Peak Temp (3)	Op Temp (°C)	Device Marking (4/5)	Samples
AMC1306E05DWV	ACTIVE	SOIC	DWV	8	64	Green (RoHS & no Sb/Br)	NIPDAU	Level-3-260C-168 HR	-40 to 125	1306E05	Samples
AMC1306E05DWVR	ACTIVE	SOIC	DWV	8	1000	Green (RoHS & no Sb/Br)	NIPDAU	Level-3-260C-168 HR	-40 to 125	1306E05	Samples
AMC1306E25DWV	ACTIVE	SOIC	DWV	8	64	Green (RoHS & no Sb/Br)	NIPDAU	Level-3-260C-168 HR	-40 to 125	1306E25	Samples
AMC1306E25DWVR	ACTIVE	SOIC	DWV	8	1000	Green (RoHS & no Sb/Br)	NIPDAU	Level-3-260C-168 HR	-40 to 125	1306E25	Samples
AMC1306M05DWV	ACTIVE	SOIC	DWV	8	64	Green (RoHS & no Sb/Br)	NIPDAU	Level-3-260C-168 HR	-40 to 125	1306M05	Samples
AMC1306M05DWVR	ACTIVE	SOIC	DWV	8	1000	Green (RoHS & no Sb/Br)	NIPDAU	Level-3-260C-168 HR	-40 to 125	1306M05	Samples
AMC1306M25DWV	ACTIVE	SOIC	DWV	8	64	Green (RoHS & no Sb/Br)	NIPDAU	Level-3-260C-168 HR	-40 to 125	1306M25	Samples
AMC1306M25DWVR	ACTIVE	SOIC	DWV	8	1000	Green (RoHS & no Sb/Br)	NIPDAU	Level-3-260C-168 HR	-40 to 125	1306M25	Samples

(1) The marketing status values are defined as follows:
ACTIVE: Product device recommended for new designs.
LIFEBUY: TI has announced that the device will be discontinued, and a lifetime-buy period is in effect.
NRND: Not recommended for new designs. Device is in production to support existing customers, but TI does not recommend using this part in a new design.
PREVIEW: Device has been announced but is not in production. Samples may or may not be available.
OBSOLETE: TI has discontinued the production of the device.

(2) **RoHS:** TI defines "RoHS" to mean semiconductor products that are compliant with the current EU RoHS requirements for all 10 RoHS substances, including the requirement that RoHS substance do not exceed 0.1% by weight in homogeneous materials. Where designed to be soldered at high temperatures, "RoHS" products are suitable for use in specified lead-free processes. TI may reference these types of products as "Pb-Free".
RoHS Exempt: TI defines "RoHS Exempt" to mean products that contain lead but are compliant with EU RoHS pursuant to a specific EU RoHS exemption.
Green: TI defines "Green" to mean the content of Chlorine (Cl) and Bromine (Br) based flame retardants meet JS709B low halogen requirements of <=1000ppm threshold. Antimony trioxide based flame retardants must also meet the <=1000ppm threshold requirement.

(3) MSL, Peak Temp. - The Moisture Sensitivity Level rating according to the JEDEC industry standard classifications, and peak solder temperature.

(4) There may be additional marking, which relates to the logo, the lot trace code information, or the environmental category on the device.

(5) Multiple Device Markings will be inside parentheses. Only one Device Marking contained in parentheses and separated by a "~" will appear on a device. If a line is indented then it is a continuation of the previous line and the two combined represent the entire Device Marking for that device.

(6) Lead/Ball Finish - Orderable Devices may have multiple material finish options. Finish options are separated by a vertical ruled line. Lead/Ball Finish values may wrap to two lines if the finish value exceeds the maximum column width.

Important Information and Disclaimer: The information provided on this page represents TI's knowledge and belief as of the date that it is provided. TI bases its knowledge and belief on information provided by third parties, and makes no representation or warranty as to the accuracy of such information. Efforts are underway to better integrate information from third parties. TI has taken and continues to take reasonable steps to provide representative and accurate information but may not have conducted destructive testing or chemical analysis on incoming materials and chemicals. TI and TI suppliers consider certain information to be proprietary, and thus CAS numbers and other limited information may not be available for release.

In no event shall TI's liability arising out of such information exceed the total purchase price of the TI part(s) at issue in this document sold by TI to Customer on an annual basis.

TAPE AND REEL INFORMATION

REEL DIMENSIONS

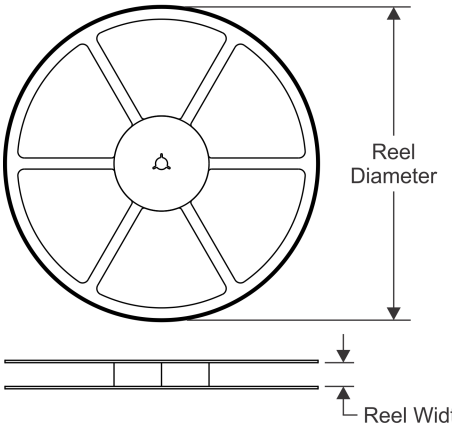

TAPE DIMENSIONS

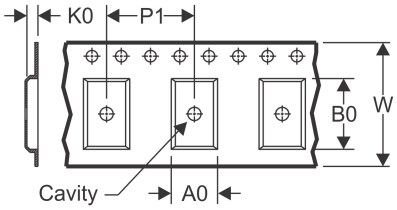

A0	Dimension designed to accommodate the component width
B0	Dimension designed to accommodate the component length
K0	Dimension designed to accommodate the component thickness
W	Overall width of the carrier tape
P1	Pitch between successive cavity centers

QUADRANT ASSIGNMENTS FOR PIN 1 ORIENTATION IN TAPE

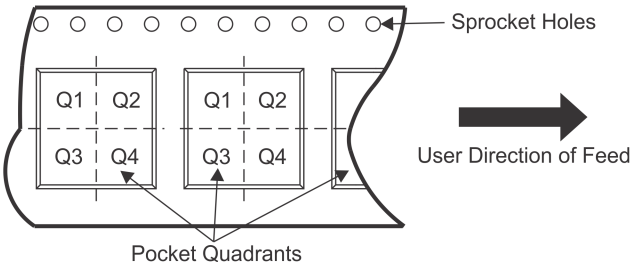

*All dimensions are nominal

Device	Package Type	Package Drawing	Pins	SPQ	Reel Diameter (mm)	Reel Width W1 (mm)	A0 (mm)	B0 (mm)	K0 (mm)	P1 (mm)	W (mm)	Pin1 Quadrant
AMC1306E05DWVR	SOIC	DWV	8	1000	330.0	16.4	12.05	6.15	3.3	16.0	16.0	Q1
AMC1306E25DWVR	SOIC	DWV	8	1000	330.0	16.4	12.05	6.15	3.3	16.0	16.0	Q1
AMC1306M05DWVR	SOIC	DWV	8	1000	330.0	16.4	12.05	6.15	3.3	16.0	16.0	Q1
AMC1306M25DWVR	SOIC	DWV	8	1000	330.0	16.4	12.05	6.15	3.3	16.0	16.0	Q1

TAPE AND REEL BOX DIMENSIONS

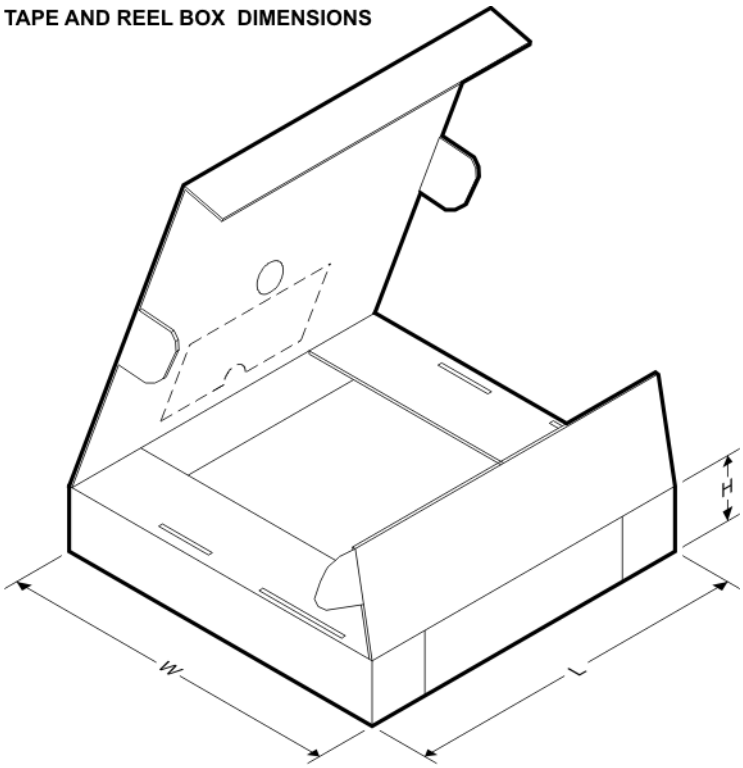

*All dimensions are nominal

Device	Package Type	Package Drawing	Pins	SPQ	Length (mm)	Width (mm)	Height (mm)
AMC1306E05DWVR	SOIC	DWV	8	1000	350.0	350.0	43.0
AMC1306E25DWVR	SOIC	DWV	8	1000	350.0	350.0	43.0
AMC1306M05DWVR	SOIC	DWV	8	1000	350.0	350.0	43.0
AMC1306M25DWVR	SOIC	DWV	8	1000	350.0	350.0	43.0

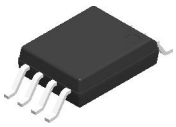

DWV0008A

SOIC - 2.8 mm max height

SOIC

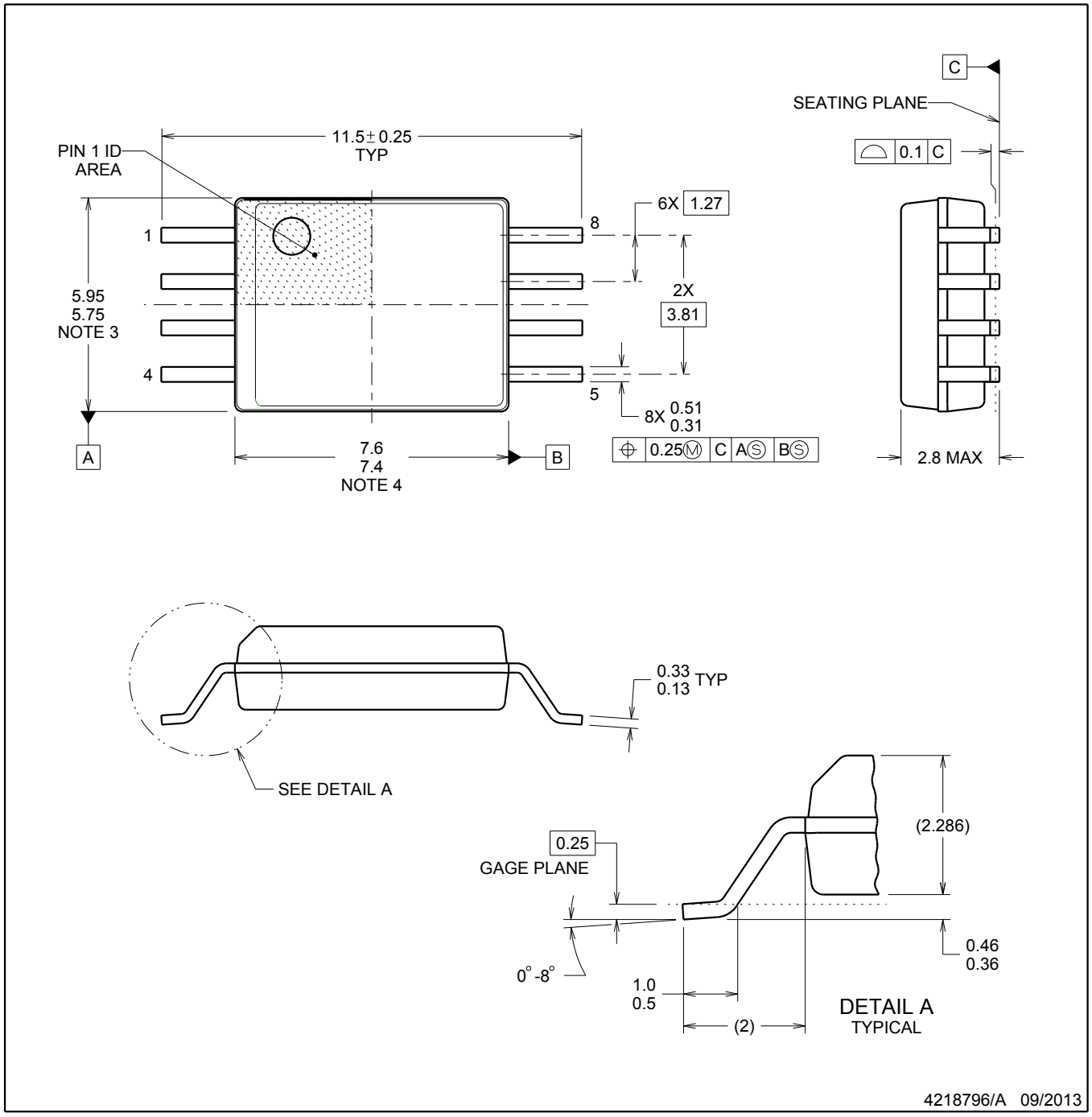

NOTES:

1. All linear dimensions are in millimeters. Dimensions in parenthesis are for reference only. Dimensioning and tolerancing per ASME Y14.5M.
2. This drawing is subject to change without notice.
3. This dimension does not include mold flash, protrusions, or gate burrs. Mold flash, protrusions, or gate burrs shall not exceed 0.15 mm, per side.
4. This dimension does not include interlead flash. Interlead flash shall not exceed 0.25 mm, per side.

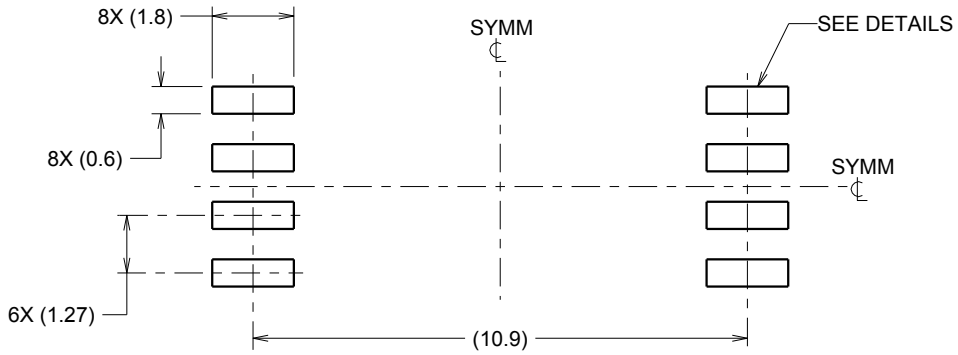

LAND PATTERN EXAMPLE
9.1 mm NOMINAL CLEARANCE/CREEPAGE
SCALE:6X

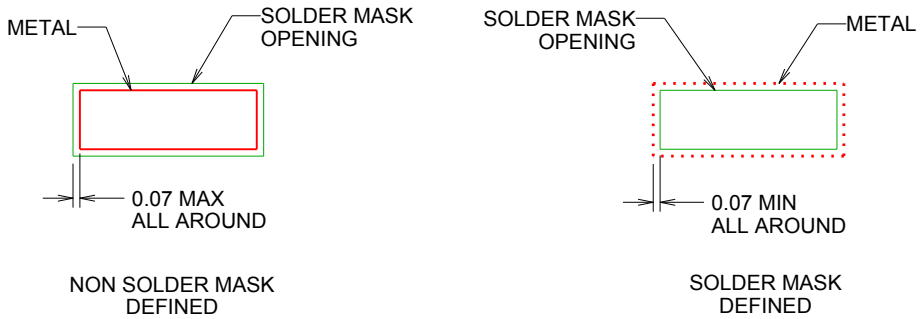

SOLDER MASK DETAILS

4218796/A 09/2013

NOTES: (continued)

5. Publication IPC-7351 may have alternate designs.
6. Solder mask tolerances between and around signal pads can vary based on board fabrication site.

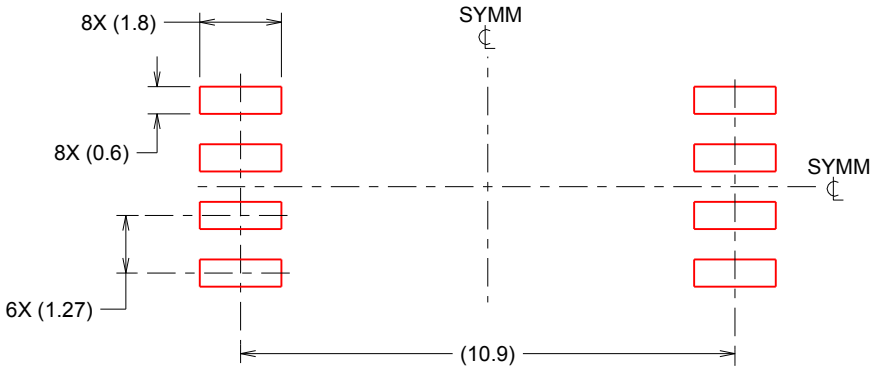

SOLDER PASTE EXAMPLE
BASED ON 0.125 mm THICK STENCIL
SCALE:6X

4218796/A 09/2013

NOTES: (continued)

7. Laser cutting apertures with trapezoidal walls and rounded corners may offer better paste release. IPC-7525 may have alternate design recommendations.
8. Board assembly site may have different recommendations for stencil design.

IMPORTANT NOTICE AND DISCLAIMER

TI PROVIDES TECHNICAL AND RELIABILITY DATA (INCLUDING DATASHEETS), DESIGN RESOURCES (INCLUDING REFERENCE DESIGNS), APPLICATION OR OTHER DESIGN ADVICE, WEB TOOLS, SAFETY INFORMATION, AND OTHER RESOURCES “AS IS” AND WITH ALL FAULTS, AND DISCLAIMS ALL WARRANTIES, EXPRESS AND IMPLIED, INCLUDING WITHOUT LIMITATION ANY IMPLIED WARRANTIES OF MERCHANTABILITY, FITNESS FOR A PARTICULAR PURPOSE OR NON-INFRINGEMENT OF THIRD PARTY INTELLECTUAL PROPERTY RIGHTS.

These resources are intended for skilled developers designing with TI products. You are solely responsible for (1) selecting the appropriate TI products for your application, (2) designing, validating and testing your application, and (3) ensuring your application meets applicable standards, and any other safety, security, or other requirements. These resources are subject to change without notice. TI grants you permission to use these resources only for development of an application that uses the TI products described in the resource. Other reproduction and display of these resources is prohibited. No license is granted to any other TI intellectual property right or to any third party intellectual property right. TI disclaims responsibility for, and you will fully indemnify TI and its representatives against, any claims, damages, costs, losses, and liabilities arising out of your use of these resources.

TI’s products are provided subject to TI’s Terms of Sale (www.ti.com/legal/termsofsale.html) or other applicable terms available either on ti.com or provided in conjunction with such TI products. TI’s provision of these resources does not expand or otherwise alter TI’s applicable warranties or warranty disclaimers for TI products.

Mailing Address: Texas Instruments, Post Office Box 655303, Dallas, Texas 75265
Copyright © 2020, Texas Instruments Incorporated