UNLESS OTHERWISE SPECIFIED, ALL NOTES ARE APPLICABLE.

1. APPLICATION DESIGN, MANUFACTURING AND INSPECTION DOCUMENTS.
   IPC-2221A & IPC-2222 / DESIGN STANDARD FOR RIGID PRINTED CIRCUIT BOARDS AND RIGID PRINTED BOARD ASSEMBLIES.
   IPC-6012 / QUALIFICATION AND PERFORMANCE SPECIFICATION FOR RIGID PRINTED BOARD, CLASS 2, CURRENT REVISION.
   IPC-A-600 / ACCEPTABILITY OF PRINTED BOARDS, CLASS 2, CURRENT REVISION.
2. VIA 8 & 10MIL SIZES APPLY AFTER PLATING. TOLERANCE TO BE +.003/-.010.
   HOLE SIZE APPLY AFTER PLATING. TOLERANCE TO BE +/-.003.
3. REGISTRATION TOLERANCE: ARTWORK +/- .002.
   ALL HOLE CENTERS +/-.005 FROM DIMENSION DATUM.
4. MINIMUM COPPER WALL THICKNESS SHALL BE .001 INCH.
   FOR ALL PLATED THROUGH HOLES. BREAKOUT NOT ALLOWED.
5. PROCESS AND MATERIAL MUST CONFORM TO UL 796. MATERIAL MUST MEET OR EXCEED UL FLAMMABILITY RATING 94V-0.
   MATERIAL: MULTI-LAYER (SEE DETAIL "A")
   SEE LAYER STACKUP FOR ALL PRE-PREG & CORE THICKNESSES, COPPER OZ AND MATERIAL. FINISHED BOARD THICKNESS: .062" +/- 10%
6. MANUFACTURE'S UL MARKING, FLAMMABILITY RATING, LOGO AND DATE CODE TO BE PLACED IN SILKSCREEN ON BOTTOM SIDE OF THE BOARD.
7. SMOBC/IMMERSION GOLD: 2 - 8 uIN OVER 118-236 uIN NICKEL PLATING.
8. SOLDERMASK BOTH SIDES USING TAIYO (OR EQUIVALENT)
   COLOR = RED (0.001 TO 002" THICK OVER METAL.
9. SILKSCREEN BOTH SIDES USING WHITE NPI LEADFREE.
   REGISTRATION TOLERANCE TO BE +/-.005.
   INK IS NOT ALLOWED ON EXPOSED PLATED AREA.
10. P.C. BOARD TO BE FREE OF DIRT, OIL, FINGER PRINTS, ETC.
11. BOARD WARPAGE, WARP AND TWIST SHALL NOT EXCEED .007 INCH PER INCH MEASURED AT ANY LOCATION OR DIRECTION ON THE BOARD.
12. BOARD MUST BE 100% ELECTRICALLY TESTED TO ENSURE NO SHORTS OR OPEN CIRCUITS AT 20V.
13. ALL OUTER LAYERS USING A 19MIL TRACE WIDTH SHALL BE 50 OHMS SINGLE ENDED +/- 10%.
14. ALL OUTER LAYERS USING A 9MIL TRACE WIDTH AND 6MIL SPACING SHALL BE 100 OHMS DIFFERENTIAL +/- 10%.
15. MINIMUM COPPER CONDUCTOR WIDTH IS: 4MIL.
    MINIMUM COPPER CONDUCTOR SPACING IS: 3.5MIL.
16. ALL INNER LAYER UNCONNECTED PADS SHALL BE REMOVED.
17. PWB MUST BE ROHS COMPLIANT AND SURVIVE LEAD FREE ASSEMBLY, MAX REFLOW OF 260 DEGREES C (6 PASSES).
18. ALL THROUGH VIAS TO BE FILLED WITH NON-CONDUCTIVE MATERIAL. FILLED VIAS TO BE PLATED AFTER PLUGGING TO PRESENT FLAT SURFACE TO DEVICE. NO POTHOLES.

REVISIONS

ZONE	LTR	DESCRIPTION	DATE	APPROVED

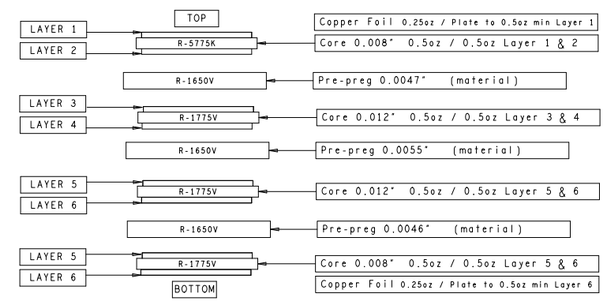

DRILL CHART: TOP to BOTTOM			
ALL UNITS ARE IN MILS			
FIGURE	SIZE	PLATED	QTY
·	6.0	PLATED	109
·	8.0	PLATED	8
•	8.0	PLATED	14
·	8.0	PLATED	2720
·	10.0	PLATED	108
•	12.0	PLATED	528
*	38.0	PLATED	24
‹	40.0	PLATED	5
H	55.0	PLATED	2
G	62.0	PLATED	7
G	67.0	PLATED	20
◆	106.0	PLATED	2
◉	120.0	PLATED	2
Y	125.0	PLATED	4
②	140.0	PLATED	1
*	35.43	NON-PLATED	2
v	50.0	NON-PLATED	2
Y	125.0	NON-PLATED	2

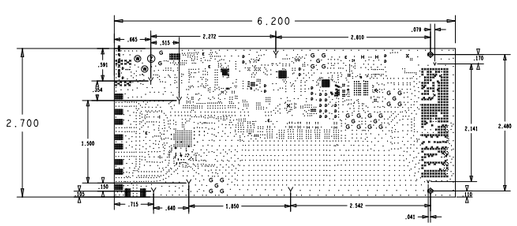

UNLESS OTHERWISE SPECIFIED DIMENSIONS ARE IN INCHES TOLERANCES ARE: FRACTIONS +/- DECIMALS .XX +/-.01 .XXX +/-.005 ANGLES +/-	CONTRACT NO.	TEXAS INSTRUMENTS INC.
	APPROVALS / DATE: DRAWN L. NGUYEN 03-07-16; ENG E. DMOBENG 03-07-16	FABRICATION DRAWING DAC38RF8xEVM
MATERIAL SEE NOTE 5		
FINISH SEE NOTE 7, 8, 9		SIZE D; CODE IDENT NO.; DRAWING NO.; REV. E
DO NOT SCALE DRAWING		SCALE NONE; SHEET 1 OF 1