User's Guide

SNLU251A–August 2019–Revised January 2020

DS160PR410EVM-SMA Evaluation Module (EVM)

The DS160PR410EVM-RSC and DS160PR410EVM-SMA evaluation modules provide a complete high-bandwidth platform for evaluating the signal conditioning features of the Texas Instruments DS160PR410 Quad-Channel PCI-Express Gen-4 Linear Redriver. These evaluation boards can be used for standard compliance testing, performance evaluation, and initial system prototyping.

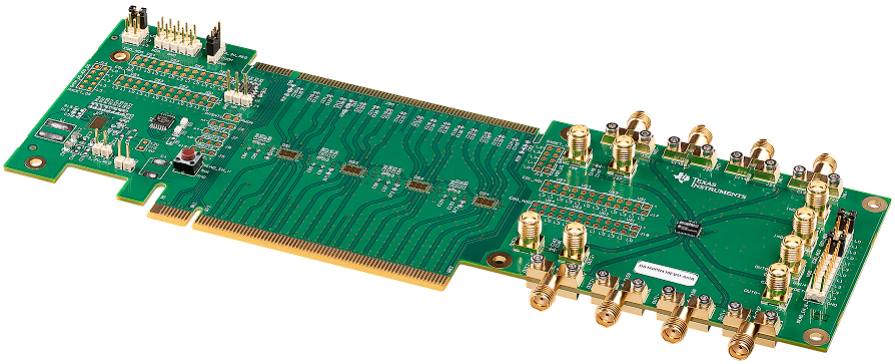

Figure 1. DS160PR410EVM-SMA - Top Side Photo

Contents

1 Introduction 3
1.1 Features 3
1.2 Applications 3
1.3 Description 4
1.4 Quick-Start Guide (Pin Mode) 9
1.5 Quick-Start Guide (SMBus Slave Mode) 10
2 Test Setup and Results 11
3 Board Layout 12
4 Schematic and Bill of Materials 14
4.1 Schematic 14
4.2 Bill of Materials 19
4.3 REACH Compliance 24
5 References 24

List of Figures

1 DS160PR410EVM-SMA - Top Side Photo 1
2 SigCon Architect DS160PR410 High Level Page 10
3 Example Test Setup and Results 11
4 Top Layer 12
5 Bottom Layer 13
6 Top Level Schematic Page 14
7 Control and Status Schematic Page 15
8 Voltage Regulator Schematic Page 16
9 Device Schematic Page 17
10 Hardware Page 18

Copyright © 2019–2020, Texas Instruments Incorporated

List of Tables

1 4-Level Control Pin Settings 4
2 Modes of Operation 4
3 SMBus / I2C Slave Address Settings 5
4 Equalization Control Settings 6
5 4-Level Control Pin Settings 6
6 VOD Control 7
7 GAIN Control 7
8 EVM Global Controls 8
9 Bill of Materials 19
10 REACH Affected Components 24

Trademarks

All trademarks are the property of their respective owners.

Copyright © 2019–2020, Texas Instruments Incorporated

1 Introduction

The DS160PR410EVM-RSC evaluation module option features eight DS160PR410 linear redrivers that can extend the transmission distance of a PCIe Gen-4 x16 bus. It can directly be plugged into a PCIe slot on a Server / PC motherboard using one end of the board, and paired up with a PCIe Riser Card using the straddle mount connector attached to the other end of the board.

The DS160PR410EVM-SMA evaluation board option features a single, standalone DS160PR410 device with the high-speed I/Os routed to SMA connectors. The SMA connectors can interface to multiple connector types through commercially available breakout cables, adaptors, and boards (not included).

This document describes the DS160PR410EVM-SMA evaluation module.

1.1 Features

- One standalone 4-channel redriver with the high-speed I/Os routed to SMA connectors
- Linear equalization for seamless support of link training and PCIe channel extension
- CTLE boosts up to 18 dB at 8 GHz
- Programmable device configuration through GPIO or I2C / SMBus
- Industrial temperature range: –40ºC to 85ºC
- Flow-through layout in 4-mm × 6-mm 40-pin, leadless WQFN 0.4-mm pitch package

1.2 Applications

- PCI Express Gen-1, 2, 3, and 4
- High-speed interfaces up to 25 Gbps
- Enterprise server motherboard, workstation
- Enterprise storage
- Enterprise add-in card, end-point

Copyright © 2019–2020, Texas Instruments Incorporated

1.3 Description

1.3.1 DS160PR410 4-Level I/O Control Inputs

The DS160PR410 has six (GAIN, VOD, EQ1_ADDR1, EQ0_ADDR0, EN_SMB, and RX_DET) 4-level input pins that are used to control the configuration of the device. These 4-level inputs use a resistor divider to help set the four valid levels and provide a wider range of control settings.

Table 1. 4-Level Control Pin Settings

PIN LEVEL	PIN SETTING
L0	1 kΩ to GND
L1	13 kΩ to GND
L2	Float
L3	59 kΩ to GND

1.3.2 DS160PR410 Modes of Operation

The DS160PR410 can be configured to operate in either Pin Mode, SMBus / I2C Slave Mode, or SMBus / I2C Master Mode. The mode of operation of the DS160PR410 is determined by the pin strap setting on the EN_SMB pin as shown in Table 2.

Table 2. Modes of Operation

EN_SMB PIN LEVEL	MODE OF OPERATION
L0	Pin Mode
L1	SMBus / I2C Master Mode
L2	Reserved
L3	SMBus / I2C Slave Mode

Copyright © 2019–2020, Texas Instruments Incorporated

1.3.3 DS160PR410 SMBus / I2C Register Control Interface

The DS160PR410 may be configured through a standard I2C or SMBus interface that may operate up to 1 MHz. The slave address of the DS160PR410 is determined by the pin strap settings on the EQ1_ADDR1 and EQ0_ADDR0 pins. The device can be configured for best signal integrity and power settings in the system using the I2C or SMBus interface. Certain status information is also available through this interface. The possible SMBus / I2C slave addresses are shown in Table 3.

Table 3. SMBus / I2C Slave Address Settings

EQ1_ADDR1 PIN LEVEL	EQ0_ADDR0 PIN LEVEL	8-BIT WRITE ADDRESS (HEX)	7-BIT ADDRESS (HEX)
L0	L0	0x30	0x18
L0	L1	0x32	0x19
L0	L2	0x34	0x1A
L0	L3	0x36	0x1B
L1	L0	0x38	0x1C
L1	L1	0x3A	0x1D
L1	L2	0x3C	0x1E
L1	L3	0x3E	0x1F
L2	L0	0x40	0x20
L2	L1	0x42	0x21
L2	L2	0x44	0x22
L2	L3	0x46	0x23
L3	L0	0x48	0x24
L3	L1	0x4A	0x25
L3	L2	0x4C	0x26
L3	L3	0x4E	0x27

Copyright © 2019–2020, Texas Instruments Incorporated

1.3.4 DS160PR410 Equalization Control

Each channel of the DS160PR410 features a continuous-time linear equalizer (CTLE) that applies high-frequency boost and low-frequency attenuation to help equalize the frequency-dependent insertion loss effects of the passive channel. Table 4 shows available equalization gain that can be set through EQ0_ADDR0 and EQ1_ADDR1 control pins when operating in Pin Mode.

Table 4. Equalization Control Settings

EQ INDEX	EQ1_ADDR1 PIN LEVEL	EQ0_ADDR0 PIN LEVEL	CTLE BOOST AT 4 GHz (dB)	CTLE BOOST AT 8 GHz (dB)
0	L0	L0	–0.3	–0.8
1	L0	L1	0.4	1.3
2	L0	L2	3.3	5.7
3	L0	L3	3.8	7.1
4	L1	L0	4.9	8.4
5	L1	L1	5.2	9.1
6	L1	L2	5.4	9.8
7	L1	L3	6.5	10.7
8	L2	L0	6.7	11.3
9	L2	L1	7.7	12.6
10	L2	L2	8.7	13.6
11	L2	L3	9.1	14.4
12	L3	L0	9.4	15.0
13	L3	L1	10.3	15.9
14	L3	L2	10.6	16.5
15	L3	L3	11.8	17.8

The equalization gain of each channel can also be set by writing to SMBus / I2C registers in Slave or Master Modes. Refer to the *DS160PR410 Programming Guide* (SNLU255) for details.

1.3.5 DS160PR410 RX Detect State Machine

The DS160PR410 deploys an RX Detect state machine that governs the RX detection cycle as defined in the PCI Express specification. At power up or after a manually triggered event, the redriver determines whether or not a valid PCI Express termination is present at the far end of the link. The RX_DET pin of DS160PR410 provides additional flexibility to system designers to appropriately set the device in their desired mode, according to Table 5.

Table 5. 4-Level Control Pin Settings

PWDN PIN LEVEL	RXDET PIN LEVEL	DESCRIPTION
L	L0	Reserved
L	L1	Reserved
L	L2	PCI Express RX detection state machine is enabled. Recommended for PCI Express use cases. Pre Detect: Hi-Z, Post Detect: 50 Ω.
L	L3	PCI Express RX detection state machine is disabled. Recommended for non-PCI Express use cases. Inputs are always 50 Ω.
H	X	Manual reset, inputs are Hi-Z

Copyright © 2019–2020, Texas Instruments Incorporated

1.3.6 DS160PR410 Equalization DC Gain Control

When operating in Pin Mode, the VOD and GAIN pins can be used to set the overall datapath DC (low frequency) gain of the DS160PR410 as shown in Table 6 and Table 7.

Table 6. VOD Control

VOD PIN LEVEL	VOD SETTING
L0	–6 dB
L1	–3.5 dB
L2	0 dB (Recommended for most use cases)
L3	–1.6 dB

Table 7. GAIN Control

GAIN PIN LEVEL	GAIN SETTING
L0	Reserved
L1	Reserved
L2	0 dB (Recommended for most use cases)
L3	3.5 dB

The DC gain of each channel can also be set by writing to SMBus / I2C registers in Slave or Master Modes. Refer to the *DS160PR410 Programming Guide* (SNLU255) for details.

Copyright © 2019–2020, Texas Instruments Incorporated

1.3.7 DS160PR410EVM-SMA Device Controls and Access Points

Table 8 shows DS160PR410EVM-SMA global controls.

Table 8. EVM Global Controls

COMPONENT	NAME	FUNCTION / DESCRIPTION
J1	3x2 Header	EN_SMB control tied to EN_SMB pin L0: Device set to Pin Mode (Default) L1: Device set to SMBus / I2C Master Mode L2: Reserved L3: Device set to SMBus / I2C Slave Mode Install a shunt to achieve L0, L1, or L3 level on the pin. Leave floating to achieve L2 level on the pin.
J2	5x2 Header	SMBus / I2C interface. The DS160PR410 device registers can be accessed through this interface.
J3	3x1 Header	PWDN control tied to PWDN1 and PWDN2 pins PWDN tied to GND: Device enabled (Default) PWDN tied to 3.3V_REG: Device disabled. PWDN floating: Not recommended
J4	3x1 Header	Access point to the WP (write protect) pin of the onboard EEPROM device WP tied to GND: I2C Access to the EEPROM enabled WP floating: I2C Access to the EEPROM disabled (default)
J11	2x1 Header	3.3-V supply input. Apply power to this connector to power the EVM.
J12	2x1 Header	Access point to the GND reference.
J21 - J28	SMA Connectors	Access points for all RX inputs
J32 - J39	SMA Connectors	Access points for all TX outputs
J29	12x2 Header	Additional Device Controls Use pins 1-6 for configuring EQ1_ADDR1 pin of SA1 device. Use pins 7-12 for configuring EQ0_ADDR0 pin of SA1 device. Use pins 13-18 for configuring VOD pin of SA1 device. Use pins 19-20 for configuring GAIN pin of SA1 device. Use pins 21-22 for configuring RXDET pin of SA1 device. Use pins 23-24 for accessing READ_EN_N pin of SA1 device. Install a shunt to achieve L0, L1, or L3 level on the pin. Leave floating to achieve L2 level on the pin.

Copyright © 2019–2020, Texas Instruments Incorporated

1.4 Quick-Start Guide (Pin Mode)

1. Check that the shunts are at the following default positions as shown in Figure 1.
   - The redriver is configured to operate in Pin Mode (EN_SMB pin tied to L0 using J1 header).
   - The redriver is enabled (PWDN pins tied to GND using J3 header).
   - DC Gain of the RX CTLE is set to 0 dB by leaving J29 (pins 19-20) open.
   - VOD is set to 0 dB by leaving J29 (pins 13-18) open.
   - RX_Detect state machine is enabled by leaving J29 (pins 21-22) open. Disable the state machine by installing a shunt across pins 21-22 of J29.
   - EQ level of the RX CTLEs of all channels is set to 13.6 dB at 8 GHz by leaving J29 (pins 1-12) open.
2. If necessary, adjust EQ levels by arranging shunts on J29 (pins 1-12).
3. Connect a pattern or data generator to one or all RX inputs (J21-J28).
4. Optionally, insert a lossy channel between a pattern generator and RX inputs to test EQ capability of the device.
5. Apply 3.3-V supply between J11 and J12.
6. Observe one or all TX outputs (J32-J39) using a BERT or a high-bandwidth oscilloscope.

Copyright © 2019–2020, Texas Instruments Incorporated

1.5 Quick-Start Guide (SMBus Slave Mode)

1. Configure the devices to operate in the SMBus Slave Mode by setting its EN_SMB pin to the L3 level. This is accomplished by placing a shunt on J1 to L3 location.
2. Enable the devices by pulling its PWDN pins to GND. This is accomplished by placing a shunt on J3 between PWDN and GND.
3. Connect USB2ANY Adapter to J2 (Note that the USB2ANY Adapter is not supplied with the DS160PR410EVM-SMA).
4. Install SigCon Architect Version 3.0.0.10 application. It comes with the DS160PR410 profile.
5. Apply 3.3-V supply between J11 and J12.
6. Start the SigCon Architect application.
7. In the DS160PR410 Configuration Page, click on "Auto Detect" box to detect the EVM Model. If necessary, edit the devices addresses in the Edit Device Addresses box.
8. Select Low Level Page to initialize the register map tree in the application. Failure to perform this step may cause the application to crash.
9. In the DS160PR410 High Level Page, select Block Diagram as shown in Figure 2.
10. Select desired EQ Settings and Driver VOD.
11. Click Apply to All Channels.
12. Connect a pattern or data generator to one or all RX inputs (J21 - J28).
13. Optionally, insert a lossy channel between a pattern generator and RX inputs to test EQ capability of the device.
14. Observe one or all TX outputs (J32 - J39) using a BERT or a high-bandwidth oscilloscope.

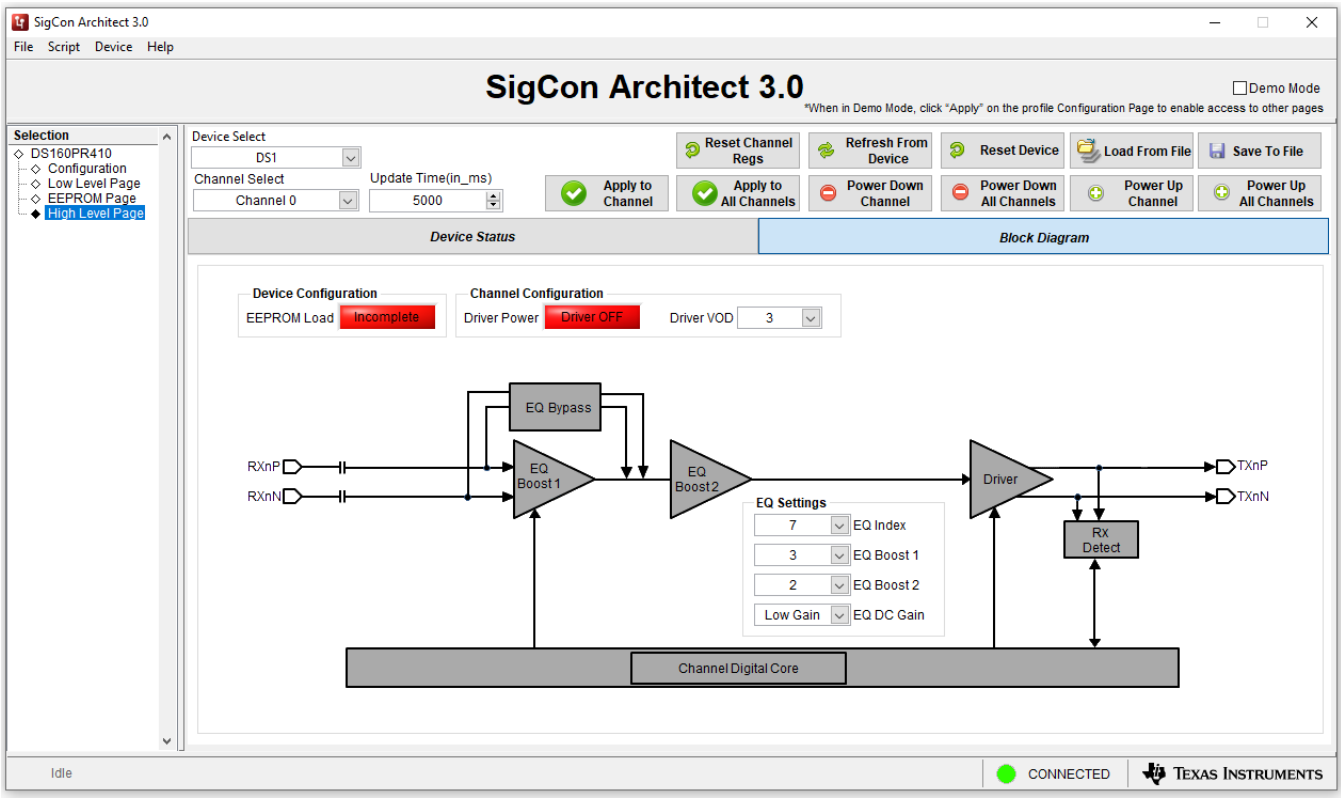

Figure 2. SigCon Architect DS160PR410 High Level Page

Copyright © 2019–2020, Texas Instruments Incorporated

2 Test Setup and Results

Figure 3 shows an electric link that models a single channel of a PCIe link and displays eye diagrams measured at different locations along the link. The source that models a PCIe TX sends a 16-Gbps PRBS-15 signal with P7 presets. After a transmission channel with –30 dB at 8-GHz insertion loss, the eye diagram is fully closed. The DS160PR410 with its CTLE set to the maximum (18-dB boost) together with the source TX equalization compensates for the losses of the pre-channel (TL1) and opens the eye at the output of the DS160PR410.

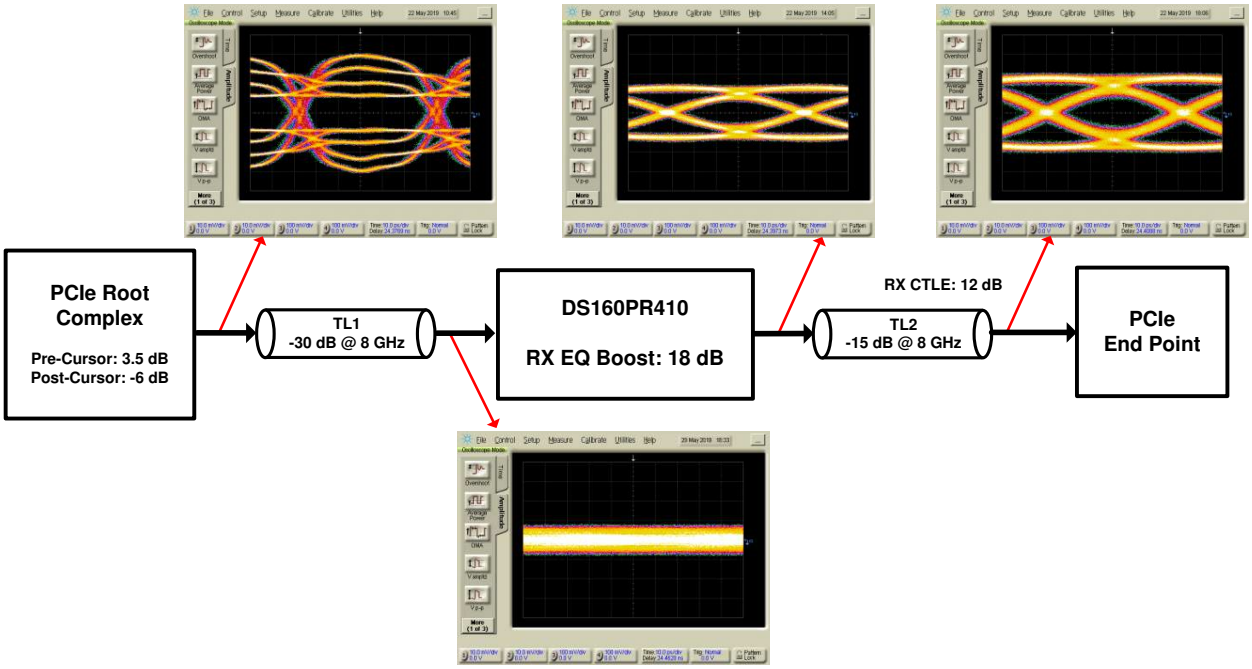

Figure 3. Example Test Setup and Results

The post-channel (TL2) losses mandate the use of PCIe RX equalization functions such as CTLE and DFE that are normally available in PCIe compliant receivers.

Copyright © 2019–2020, Texas Instruments Incorporated

3 Board Layout

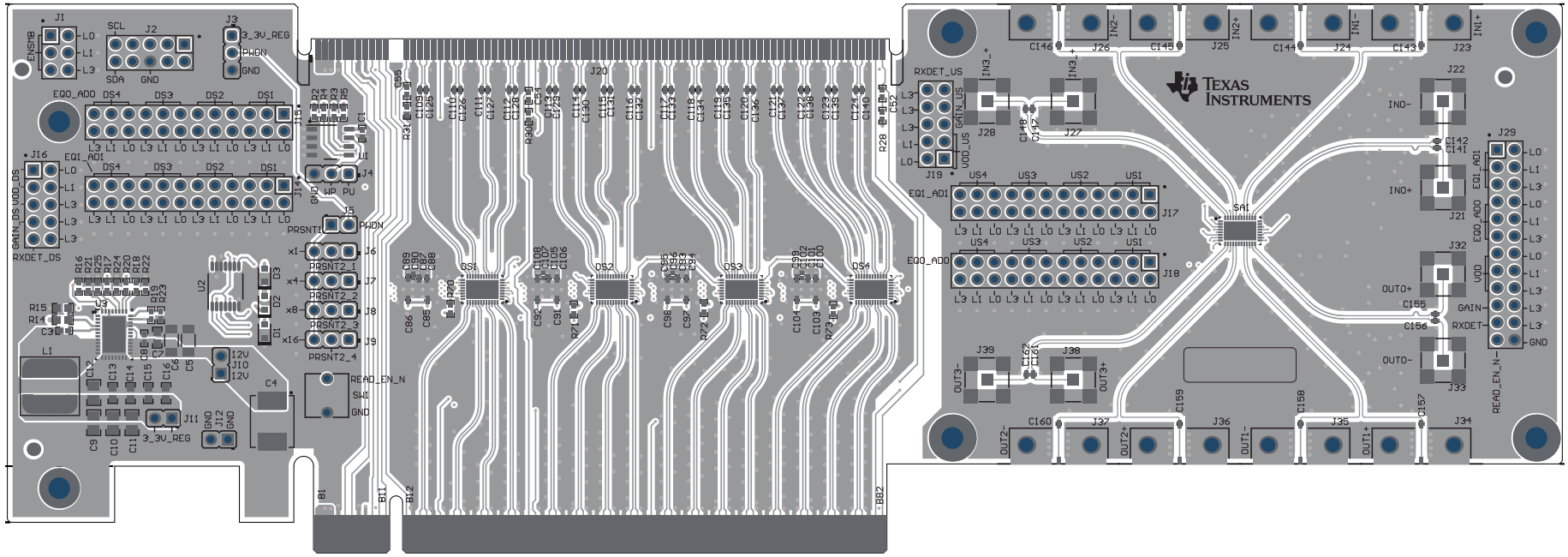

Figure 4. Top Layer

Copyright © 2019–2020, Texas Instruments Incorporated

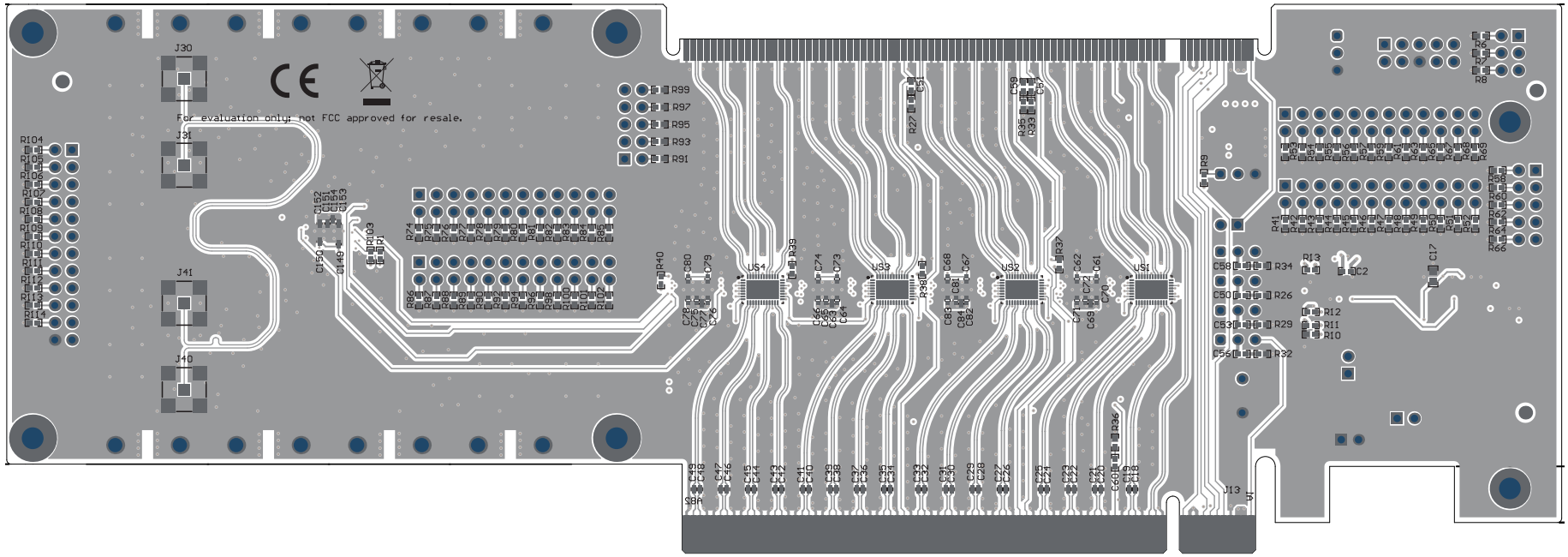

Figure 5. Bottom Layer

Copyright © 2019–2020, Texas Instruments Incorporated

4 Schematic and Bill of Materials

4.1 Schematic

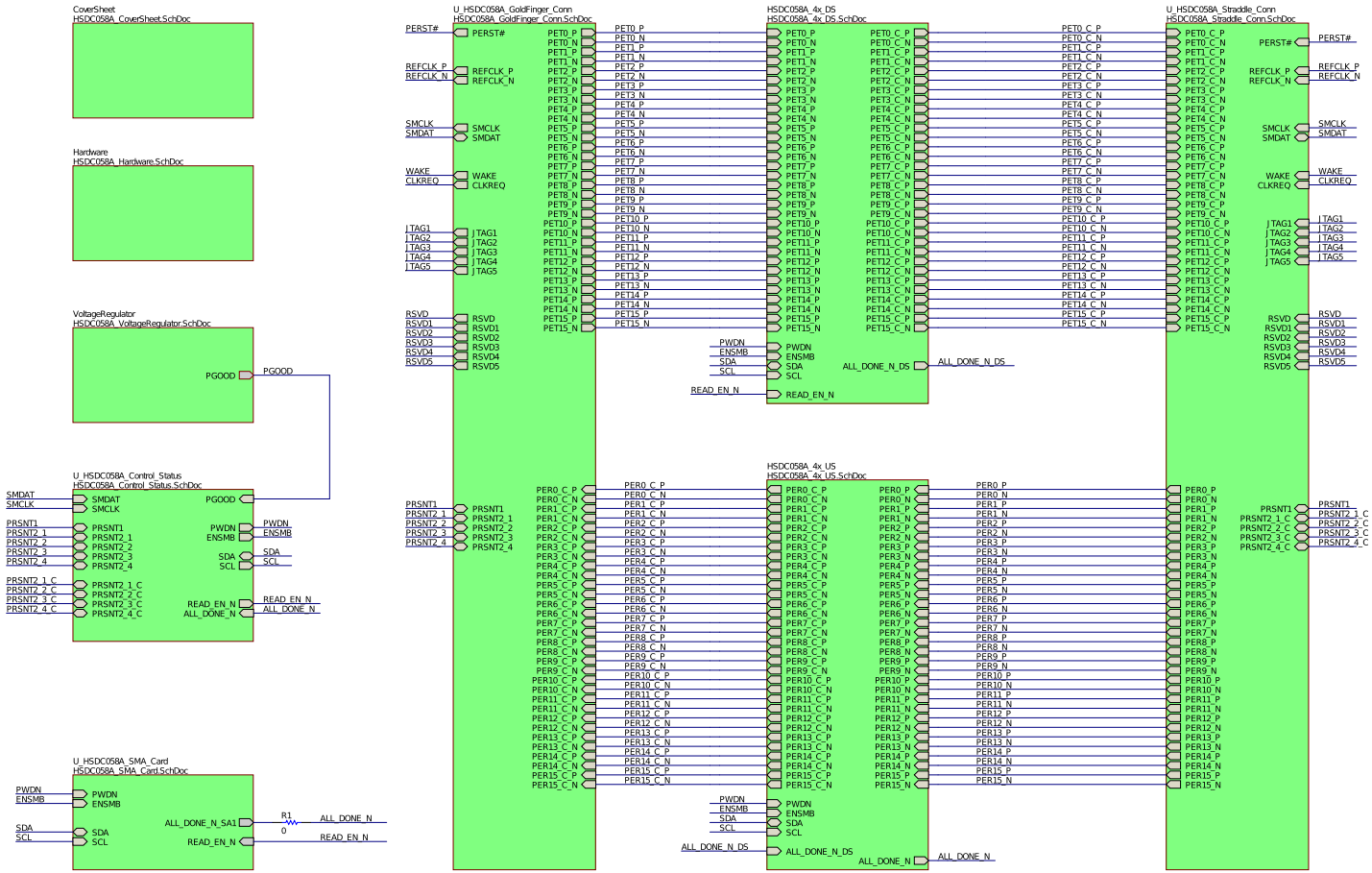

Figure 6. Top Level Schematic Page

Copyright © 2019–2020, Texas Instruments Incorporated

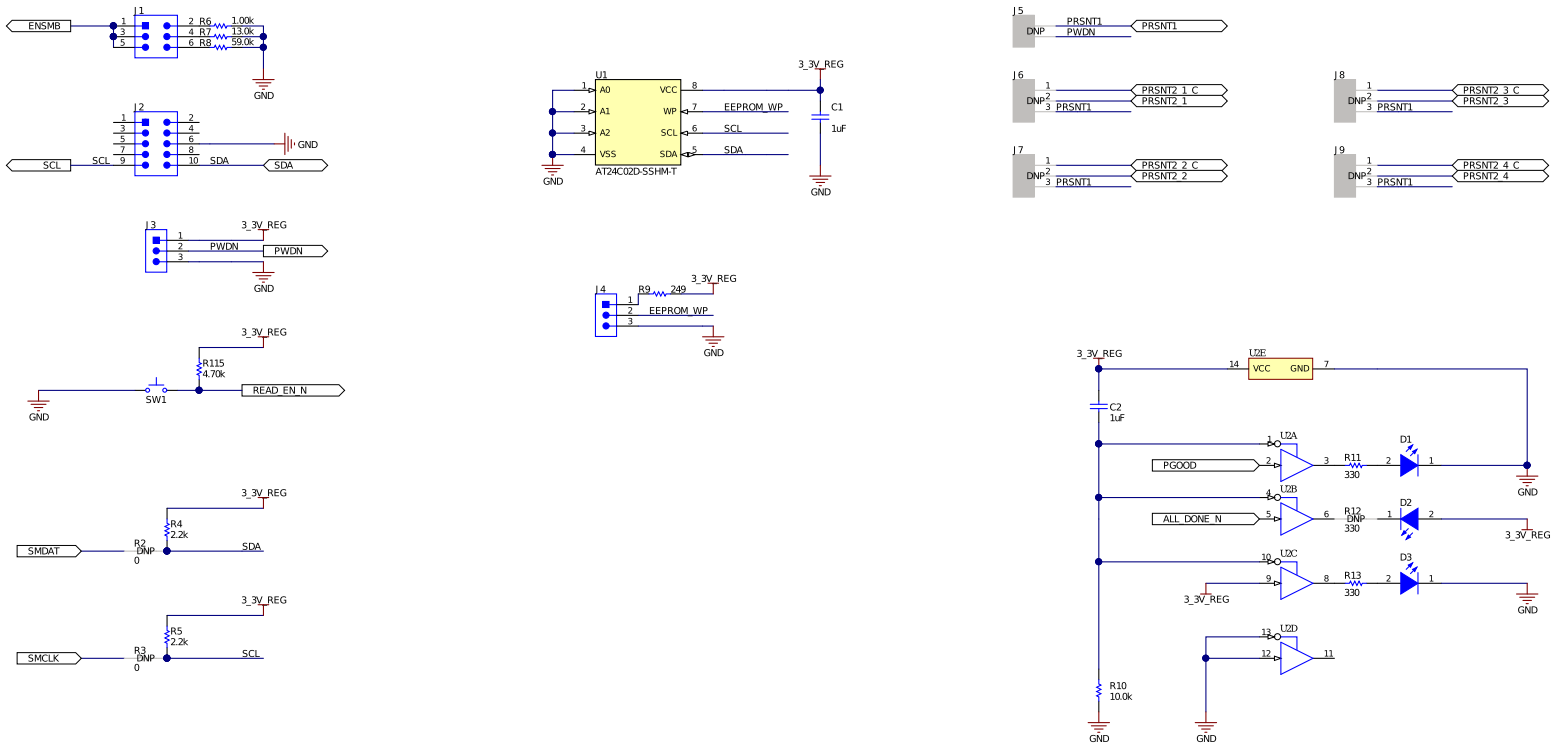

Figure 7. Control and Status Schematic Page

Copyright © 2019–2020, Texas Instruments Incorporated

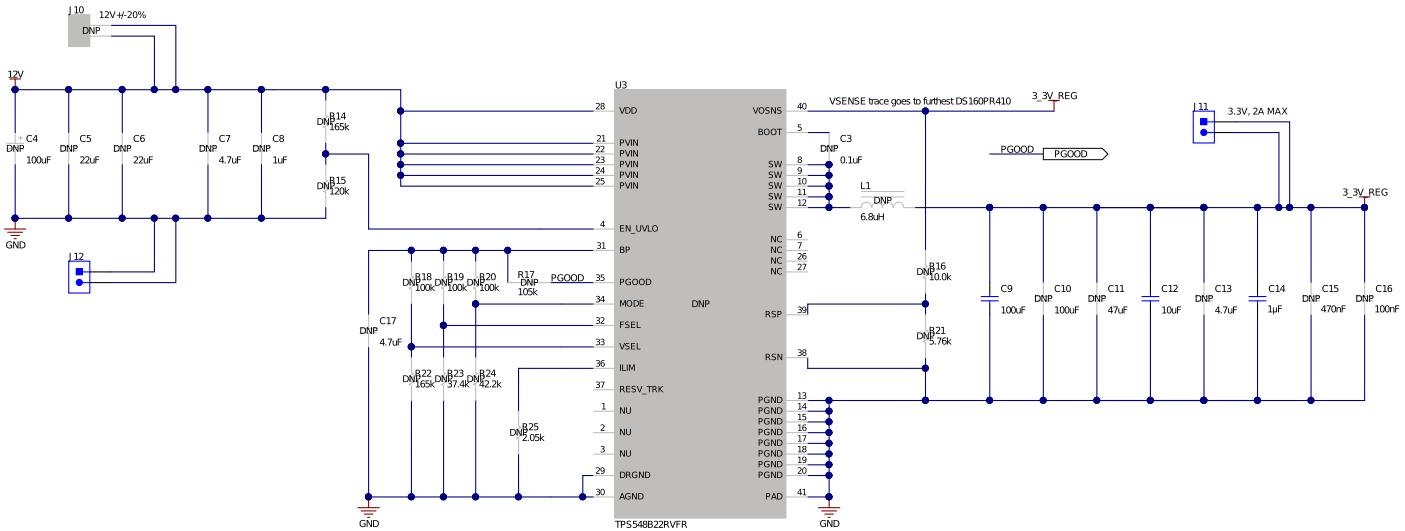

Figure 8. Voltage Regulator Schematic Page

Copyright © 2019–2020, Texas Instruments Incorporated

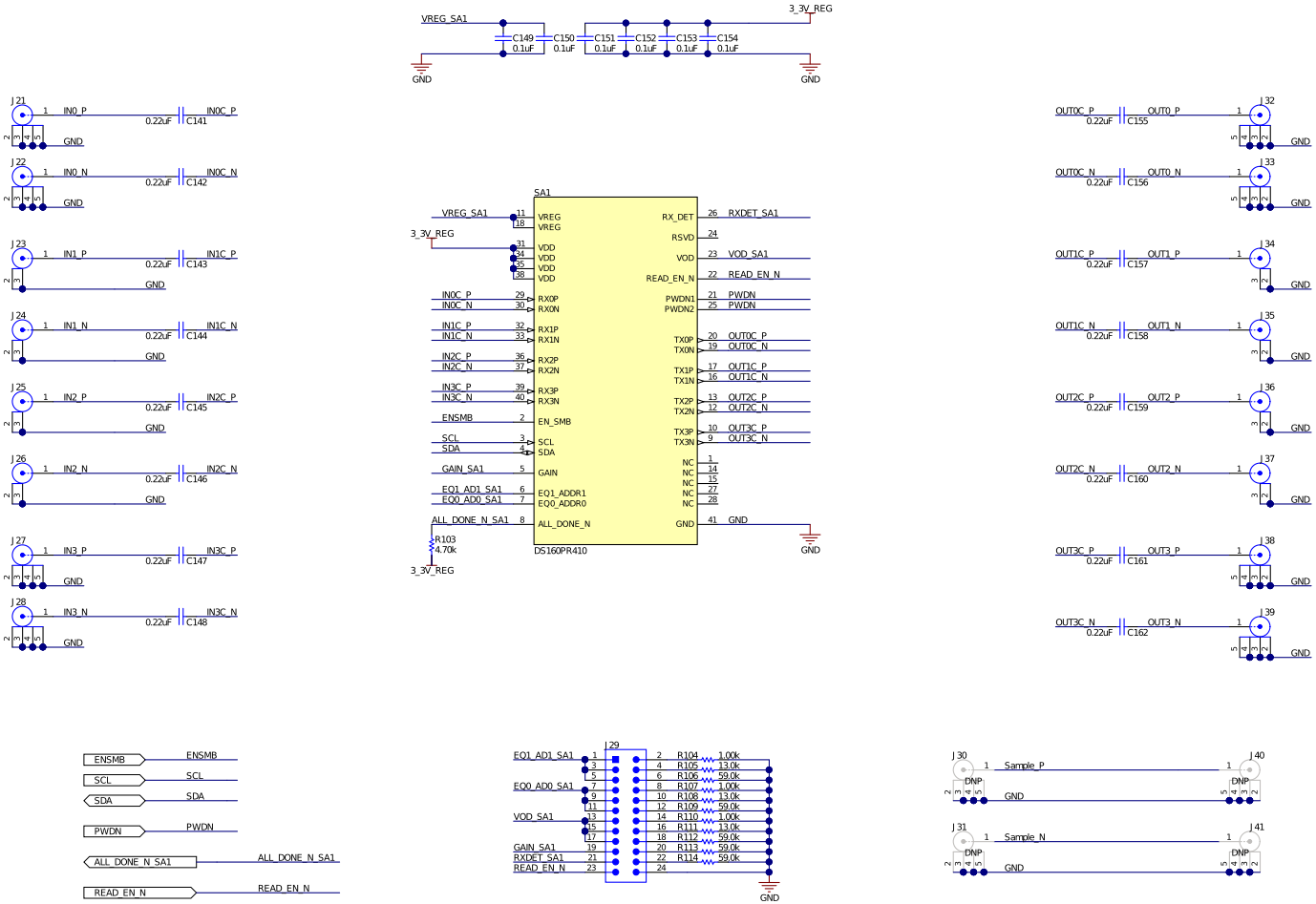

Figure 9. Device Schematic Page

Copyright © 2019–2020, Texas Instruments Incorporated

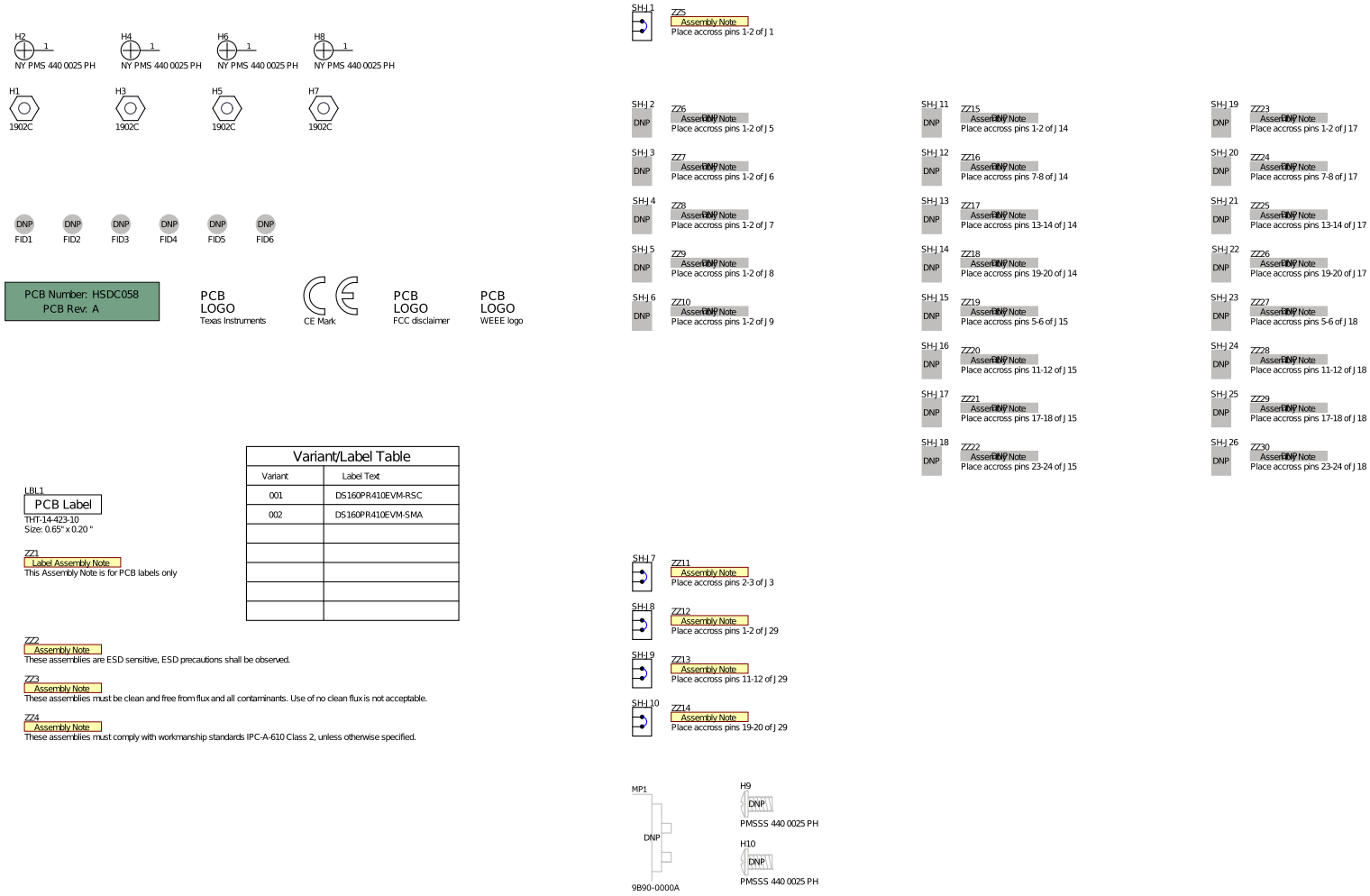

Figure 10. Hardware Page

Copyright © 2019–2020, Texas Instruments Incorporated

4.2 Bill of Materials

Table 9. Bill of Materials

DESIGNATOR	QTY	VALUE	DESCRIPTION	PACKAGE REFERENCE	PART NUMBER	MANUFACTURER
!PCB1	1		Printed Circuit Board		HSDC058	Any
C1, C2	2	1uF	CAP, CERM, 1 uF, 25 V, +/- 10%, X5R, 0402	0402	C1005X5R1E105K050BC	TDK
C9	1	100uF	CAP, CERM, 100 uF, 6.3 V, +/- 20%, X5R, 0805	0805	GRM21BR60J107M	MuRata
C12	1	10uF	CAP, CERM, 10 uF, 6.3 V, +/- 10%, X5R, 0805	0805	GRM219R60J106KE19D	MuRata
C14	1	1uF	CAP, CERM, 1 uF, 6.3 V, +/- 10%, X7R, 0603	0603	GRM188R70J105KA01D	MuRata
C141, C142, C143, C144, C145, C146, C147, C148, C155, C156, C157, C158, C159, C160, C161, C162	16	0.22uF	CAP, CERM, 0.22 uF, 10 V, +/- 20%, X5R, 0201	0201	LMK063BJ224MP-F	Taiyo Yuden
C149, C150, C151, C152, C153, C154	6	0.1uF	CAP, CERM, 0.1 uF, 6.3 V, +/- 10%, X5R, 0201	0201	C0603X5R0J104K030BC	TDK
D2, D3	2	Green	LED, Green, SMD	2x1.4mm	LG M67K-G1J2-24-Z	OSRAM
H1, H3, H5, H7	4		Standoff, Hex, 0.5"L #4-40 Nylon	Standoff	1902C	Keystone
H2, H4, H6, H8	4		Machine Screw, Round, #4-40 x 1/4, Nylon, Philips panhead	Screw	NY PMS 440 0025 PH	B and F Fastener Supply
J1	1		Header, 100mil, 3x2, Gold, TH	3x2 Header	TSW-103-07-G-D	Samtec
J2	1		Header, 100mil, 5x2, Gold, TH	5x2 Header	TSW-105-07-G-D	Samtec
J3, J4	2		Header, 2.54mm, 3x1, Gold, TH	Header, 2.54mm, 3x1, TH	961103-6804-AR	3M
J11, J12	2		Header, 2.54mm, 2x1, TH	Header, 2.54mm, 2x1, TH	961102-6404-AR	3M
J21, J22, J27, J28, J32, J33, J38, J39	8		SMA, Straight Jack, SMT	SMA Connector, SMT	732511352	Molex
J23, J24, J25, J26, J34, J35, J36, J37	8		SMA JACK 50 OHM, R/A, SMT	SMA JACK, R/A, SMT	32K243-40ML5	Rosenberger
J29	1		Header, 100mil, 12x2, Gold, TH	12x2 Header	TSW-112-07-G-D	Samtec
LBL1	1		Thermal Transfer Printable Labels, 0.650" W x 0.200" H - 10,000 per roll	PCB Label 0.650 x 0.200 inch	THT-14-423-10	Brady
R4, R5	2	2.2k	RES, 2.2 k, 5%, 0.063 W, AEC-Q200 Grade 0, 0402	0402	CRCW04022K20JNED	Vishay-Dale

Copyright © 2019–2020, Texas Instruments Incorporated

Table 9. Bill of Materials (continued)

DESIGNATOR	QTY	VALUE	DESCRIPTION	PACKAGE REFERENCE	PART NUMBER	MANUFACTURER
R6	1	1.00k	RES, 1.00 k, 1%, 0.1 W, 0402	0402	ERJ-2RKF1001X	Panasonic
R7, R105, R108, R111	4	13.0k	RES, 13.0 k, 1%, 0.063 W, AEC-Q200 Grade 0, 0402	0402	CRCW040213K0FKED	Vishay-Dale
R8, R106, R109, R112, R113, R114	6	59.0k	RES, 59.0 k, 1%, 0.063 W, AEC-Q200 Grade 0, 0402	0402	CRCW040259K0FKED	Vishay-Dale
R9	1	249	RES, 249, 1%, 0.1 W, AEC-Q200 Grade 0, 0402	0402	ERJ-2RKF2490X	Panasonic
R10	1	10.0k	RES, 10.0 k, 1%, 0.063 W, AEC-Q200 Grade 0, 0402	0402	AC0402FR-0710KL	Yageo America
R12, R13	2	330	RES, 330, 5%, 0.063 W, AEC-Q200 Grade 0, 0402	0402	CRCW0402330RJNED	Vishay-Dale
R103	1	4.70k	RES, 4.70 k, 1%, 0.063 W, 0402	0402	CRG0402F4K7	TE Connectivity
R104, R107, R110	3	1.00k	RES, 1.00 k, 1%, 0.063 W, 0402	0402	MCR01MZPF1001	Rohm
SA1	1		DS160PR410, RNQ0040A (WQFN-40)	RNQ0040A	DS160PR410	Texas Instruments
SH-J1, SH-J7, SH-J8, SH-J9, SH-J10	5	1x2	Shunt, 100mil, Flash Gold, Black	Closed Top 100mil Shunt	SPC02SYAN	Sullins Connector Solutions
SW1	1		Switch, Tactile, SPST-NO, 0.02A, 15V, TH	6.0x5.0x6mm	EVQ-21505R	Panasonic
U1	1		I2C-Compatible (2-wire) Serial EEPROM 2-Kbit (256 x 8), SOIC-8	SOIC-8	AT24C02D-SSHM-T	Atmel
U2	1		Quadruple Bus Buffer Gate With 3-State Outputs, PW0014A, LARGE T and R	PW0014A	SN74LVC125APWRG3	Texas Instruments
C3	0	0.1uF	CAP, CERM, 0.1 uF, 25 V, +/- 10%, X5R, 0402	0402	GRM155R61E104KA87D	MuRata
C4	0	100uF	CAP, TA, 100 uF, 25 V, +/- 10%, 0.1 ohm, SMD	7360-38	T495E107K025ATE100	Kemet
C5, C6	0	22uF	CAP, CERM, 22 uF, 25 V, +/- 20%, X5R, 1206_190	1206_190	TMK316BBJ226ML-T	Taiyo Yuden
C7, C17	0	4.7uF	CAP, CERM, 4.7 uF, 25 V, +/- 10%, X6S, 0603	0603	GRM188C81E475KE11D	MuRata
C8	0	1uF	CAP, CERM, 1 uF, 25 V, +/- 10%, X5R, 0402	0402	C1005X5R1E105K050BC	TDK
C10	0	100uF	CAP, CERM, 100 uF, 6.3 V, +/- 20%, X5R, 0805	0805	GRM21BR60J107M	MuRata
C11	0	47uF	CAP, CERM, 47 uF, 6.3 V, +/- 20%, X5R, 0805	0805	GRM219R60J476ME44D	MuRata

Copyright © 2019–2020, Texas Instruments Incorporated

Table 9. Bill of Materials (continued)

DESIGNATOR	QTY	VALUE	DESCRIPTION	PACKAGE REFERENCE	PART NUMBER	MANUFACTURER
C13	0	4.7uF	CAP, CERM, 4.7 uF, 6.3 V, +/- 10%, X5R, 0603	0603	GRM188R60J475KE19D	MuRata
C15	0	0.47uF	CAP, CERM, 0.47 uF, 6.3 V, +/- 10%, X7R, 0603	0603	GRM188R70J474KA01D	MuRata
C16	0	0.1uF	CAP, CERM, 0.1 uF, 6.3 V, +/- 10%, X7R, 0603	0603	GRM188R70J104KA01D	MuRata
C18, C19, C20, C21, C22, C23, C24, C25, C26, C27, C28, C29, C30, C31, C32, C33, C34, C35, C36, C37, C38, C39, C40, C41, C42, C43, C44, C45, C46, C47, C48, C49, C109, C110, C111, C112, C113, C114, C115, C116, C117, C118, C119, C120, C121, C122, C123, C124, C125, C126, C127, C128, C129, C130, C131, C132, C133, C134, C135, C136, C137, C138, C139, C140	0	0.22uF	CAP, CERM, 0.22 uF, 10 V, +/- 20%, X5R, 0201	0201	LMK063BJ224MP-F	Taiyo Yuden
C50, C51, C52, C53, C54, C55, C56, C57, C58, C59, C60	0	1pF	CAP, CERM, 1 pF, 50 V, +/- 10%, C0G/NP0, 0402	0402	GJM1555C1H1R0BB01D	MuRata
C61, C62, C63, C64, C65, C66, C67, C68, C69, C70, C71, C72, C73, C74, C75, C76, C77, C78, C79, C80, C81, C82, C83, C84, C85, C86, C87, C88, C89, C90, C91, C92, C93, C94, C95, C96, C97, C98, C99, C100, C101, C102, C103, C104, C105, C106, C107, C108	0	0.1uF	CAP, CERM, 0.1 uF, 6.3 V, +/- 10%, X5R, 0201	0201	C0603X5R0J104K030BC	TDK
D1	0	Green	LED, Green, SMD	2x1.4mm	LG M67K-G1J2-24-Z	OSRAM
DS1, DS2, DS3, DS4, US1, US2, US3, US4	0		DS160PR410, RNQ0040A (WQFN-40)	RNQ0040A	DS160PR410	Texas Instruments
FID1, FID2, FID3, FID4, FID5, FID6	0		Fiducial mark. There is nothing to buy or mount.	N/A	N/A	N/A
H9, H10	0		MACHINE SCREW PAN PHILLIPS 4-40	Machine Screw, 4-40, 1/4 inch	PMSSS 440 0025 PH	B and F Fastener Supply
J5, J10	0		Header, 2.54mm, 2x1, TH	Header, 2.54mm, 2x1, TH	961102-6404-AR	3M
J6, J7, J8, J9	0		Header, 2.54mm, 3x1, Gold, TH	Header, 2.54mm, 3x1, TH	961103-6804-AR	3M
J14, J15, J17, J18	0		Header, 100mil, 12x2, Gold, TH	12x2 Header	TSW-112-07-G-D	Samtec
J16, J19	0		Header, 100mil, 5x2, Gold, TH	5x2 Header	TSW-105-07-G-D	Samtec
J20	0		Receptacle, 1mm, 82x2, Gold, SMT	Receptacle, 1mm, 82x2, SMT	GWE82DHRN-T9410	Sullins Connector Solutions

Copyright © 2019–2020, Texas Instruments Incorporated

Table 9. Bill of Materials (continued)

DESIGNATOR	QTY	VALUE	DESCRIPTION	PACKAGE REFERENCE	PART NUMBER	MANUFACTURER
J30, J31, J40, J41	0		SMA, Straight Jack, SMT	SMA Connector, SMT	732511352	Molex
L1	0	6.8uH	Inductor, Drum Core, Ferrite, 6.8 uH, 3.2 A, 0.04 ohm, SMD	SDR0805	SDR0805-6R8ML	Bourns
MP1	0		PCI bracket	PCI_BRCKT_NPTH_2	9B90-0000A	Gompf Brackets, Inc.
R11	0	330	RES, 330, 5%, 0.063 W, AEC-Q200 Grade 0, 0402	0402	CRCW0402330RJNED	Vishay-Dale
R14	0	165k	RES, 165 k, 1%, 0.1 W, 0603	0603	RC0603FR-07165KL	Yageo
R15	0	120k	RES, 120 k, 1%, 0.1 W, 0603	0603	RC0603FR-07120KL	Yageo
R16	0	10.0k	RES, 10.0 k, 1%, 0.063 W, 0402	0402	RC0402FR-0710KL	Yageo America
R17	0	105k	RES, 105 k, 1%, 0.063 W, AEC-Q200 Grade 0, 0402	0402	CRCW0402105KFKED	Vishay-Dale
R18, R19, R20	0	100k	RES, 100 k, 1%, 0.0625 W, 0402	0402	RC0402FR-07100KL	Yageo America
R21	0	5.76k	RES, 5.76 k, 1%, 0.063 W, AEC-Q200 Grade 0, 0402	0402	CRCW04025K76FKED	Vishay-Dale
R22	0	165k	RES, 165 k, 1%, 0.1 W, AEC-Q200 Grade 0, 0402	0402	ERJ-2RKF1653X	Panasonic
R23	0	37.4k	RES, 37.4 k, 1%, 0.063 W, AEC-Q200 Grade 0, 0402	0402	CRCW040237K4FKED	Vishay-Dale
R24	0	42.2k	RES, 42.2 k, 1%, 0.063 W, AEC-Q200 Grade 0, 0402	0402	CRCW040242K2FKED	Vishay-Dale
R25	0	2.05k	RES, 2.05 k, 1%, 0.063 W, AEC-Q200 Grade 0, 0402	0402	CRCW04022K05FKED	Vishay-Dale
R26, R27, R28, R29, R30, R31, R32, R33, R34, R35, R36	0	43	RES, 43, 5%, 0.063 W, AEC-Q200 Grade 0, 0402	0402	CRCW040243R0JNED	Vishay-Dale
R37, R38, R39, R40, R70, R71, R72, R73	0	4.70k	RES, 4.70 k, 1%, 0.063 W, 0402	0402	CRG0402F4K7	TE Connectivity
R41, R44, R47, R50, R53, R56, R61, R67, R74, R77, R80, R83, R86, R89, R94, R100	0	1.00k	RES, 1.00 k, 1%, 0.063 W, 0402	0402	MCR01MZPF1001	Rohm
R42, R45, R48, R51, R54, R57, R63, R68, R75, R78, R81, R84, R87, R90, R96, R101	0	13.0k	RES, 13.0 k, 1%, 0.063 W, AEC-Q200 Grade 0, 0402	0402	CRCW040213K0FKED	Vishay-Dale
R43, R46, R49, R52, R55, R59, R65, R69, R76, R79, R82, R85, R88, R92, R98, R102	0	59.0k	RES, 59.0 k, 1%, 0.063 W, AEC-Q200 Grade 0, 0402	0402	CRCW040259K0FKED	Vishay-Dale
R58, R91	0	249	RES, 249, 1%, 0.1 W, AEC-Q200 Grade 0, 0402	0402	ERJ-2RKF2490X	Panasonic
R60, R93	0	3.24k	RES, 3.24 k, 1%, 0.063 W, AEC-Q200 Grade 0, 0402	0402	CRCW04023K24FKED	Vishay-Dale

Copyright © 2019–2020, Texas Instruments Incorporated

Table 9. Bill of Materials (continued)

DESIGNATOR	QTY	VALUE	DESCRIPTION	PACKAGE REFERENCE	PART NUMBER	MANUFACTURER
R62, R64, R66, R95, R97, R99	0	14.7k	RES, 14.7 k, 1%, 0.063 W, AEC-Q200 Grade 0, 0402	0402	CRCW040214K7FKED	Vishay-Dale
SH-J2, SH-J3, SH-J4, SH-J5, SH-J6, SH-J11, SH-J12, SH-J13, SH-J14, SH-J15, SH-J16, SH-J17, SH-J18, SH-J19, SH-J20, SH-J21, SH-J22, SH-J23, SH-J24, SH-J25, SH-J26	0	1x2	Shunt, 100mil, Flash Gold, Black	Closed Top 100mil Shunt	SPC02SYAN	Sullins Connector Solutions
U3	0		1.5-V to 16-V VIN, 4.5-V to 22-V VDD, 25-A SWIFT Synchronous Step-Down Converter with Full Differential Sense, RVF0040A (LQFN-CLIP-40)	RVF0040A	TPS548B22RVFR	Texas Instruments

Copyright © 2019–2020, Texas Instruments Incorporated

4.3 REACH Compliance

In compliance with the Article 33 provision of the EU REACH regulation we are notifying you that this EVM includes component(s) containing at least one Substance of Very High Concern (SVHC) above 0.1%. These uses from Texas Instruments do not exceed 1 ton per year. The SVHC's are shown in Table 10.

Table 10. REACH Affected Components

COMPONENT MANUFACTURER	COMPONENT TYPE	COMPONENT PART NUMBER	SVHC SUBSTANCE	SVHC CAS (WHEN AVAILABLE)
Molex	50 Ohms, SMA Jack, Vertical, PCB SMT, Gold (Au) Body	732511352	Lead	7439-92-1

5 References

For references, see the following:

1. Texas Instruments, *DS160PR410 4-Channel PCI-Express Gen-4 Linear Redriver Datasheet* (SNLS645)
2. Texas Instruments, *DS160PR410 Programming Guide* (SNLU255)
3. Texas Instruments, *Understanding EEPROM Programming for DS160PR410 PCI-Express Gen-4 Redriver* (SNLA320)

Copyright © 2019–2020, Texas Instruments Incorporated

Revision History

NOTE: Page numbers for previous revisions may differ from page numbers in the current version.

Changes from Original (August 2019) to A Revision	Page
• Changed List Item 1	9
• Added List Item 8	10

Copyright © 2019–2020, Texas Instruments Incorporated

IMPORTANT NOTICE AND DISCLAIMER

TI PROVIDES TECHNICAL AND RELIABILITY DATA (INCLUDING DATASHEETS), DESIGN RESOURCES (INCLUDING REFERENCE DESIGNS), APPLICATION OR OTHER DESIGN ADVICE, WEB TOOLS, SAFETY INFORMATION, AND OTHER RESOURCES “AS IS” AND WITH ALL FAULTS, AND DISCLAIMS ALL WARRANTIES, EXPRESS AND IMPLIED, INCLUDING WITHOUT LIMITATION ANY IMPLIED WARRANTIES OF MERCHANTABILITY, FITNESS FOR A PARTICULAR PURPOSE OR NON-INFRINGEMENT OF THIRD PARTY INTELLECTUAL PROPERTY RIGHTS.

These resources are intended for skilled developers designing with TI products. You are solely responsible for (1) selecting the appropriate TI products for your application, (2) designing, validating and testing your application, and (3) ensuring your application meets applicable standards, and any other safety, security, or other requirements. These resources are subject to change without notice. TI grants you permission to use these resources only for development of an application that uses the TI products described in the resource. Other reproduction and display of these resources is prohibited. No license is granted to any other TI intellectual property right or to any third party intellectual property right. TI disclaims responsibility for, and you will fully indemnify TI and its representatives against, any claims, damages, costs, losses, and liabilities arising out of your use of these resources.

TI’s products are provided subject to TI’s Terms of Sale (www.ti.com/legal/termsofsale.html) or other applicable terms available either on ti.com or provided in conjunction with such TI products. TI’s provision of these resources does not expand or otherwise alter TI’s applicable warranties or warranty disclaimers for TI products.

Mailing Address: Texas Instruments, Post Office Box 655303, Dallas, Texas 75265
Copyright © 2020, Texas Instruments Incorporated