SNx4CBT3383 10-Bit Bus-Exchange Switch

1 Features

- High-Bandwidth Data Path (Up to 200 MHz)
- Low and Flat ON-State Resistance (r_{ON}) Characteristics Over Operating Range (r_{ON} = 5 Ω Typical)
- Control Inputs Can Be Driven by TTL or 5-V and 3.3-V CMOS Outputs
- Bidirectional Data Flow With Near-Zero Propagation Delay
- Low Input and Output Capacitance Minimizes Loading and Signal Distortion ($C_{io(OFF)}$ = 6 pF Typical)
- V_{CC} Operating Range From 4.5 V to 5 V
- Low Power Consumption (I_{CC} = 50 µA Maximum)

2 Applications

- Enterprise Servers
- Ethernet Switches
- Routers
- Servers
- Industrial PCs

3 Description

The SN74CBT3383 and SN54CBT3383 devices provide ten bits of high-speed TTL-compatible bus switching or exchanging. The low ON-state resistance of the switch allows connections to be made with minimal propagation delay.

The devices operate as a 10-bit bus switch or a 5-bit bus exchanger, which provides swapping of the A and B pairs of signals. The bus-exchange function is selected when BX is high. The switches are connected when $\overline{BE}$ is low.

Device Information(1)

PART NUMBER	PACKAGE	BODY SIZE (NOM)
SN74CBT3383DB	SSOP (24)	8.40 mm × 5.30 mm
SN74CBT3383DBQ	SSOP (24)	8.65 mm × 3.90 mm
SN74CBT3383DW	SOIC (24)	15.40 mm × 7.50 mm
SN74CBT3383PW	TSSOP (24)	7.80 mm × 4.40 mm
SNJ54CBT3383JT	CDIP (24)	32.00 mm × 6.92 mm
SN54CBT3383W	CFP (24)	14.35 × 9.08 mm

(1) For all available packages, see the orderable addendum at the end of the data sheet.

Logic Diagram (Positive Logic)

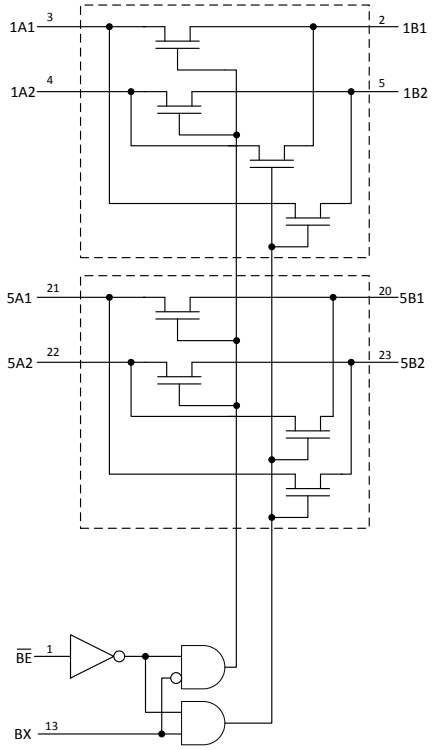

An IMPORTANT NOTICE at the end of this data sheet addresses availability, warranty, changes, use in safety-critical applications, intellectual property matters and other important disclaimers. PRODUCTION DATA.

On products compliant to MIL-PRF-38535, all parameters are tested unless otherwise noted. On all other products, production

Table of Contents

1 Features ... 1
2 Applications ... 1
3 Description ... 1
4 Revision History ... 2
5 Pin Configuration and Functions ... 3
6 Specifications ... 4
6.1 Absolute Maximum Ratings ... 4
6.2 ESD Ratings ... 4
6.3 Recommended Operating Conditions ... 4
6.4 Thermal Information ... 4
6.5 Electrical Characteristics ... 5
6.6 Switching Characteristics ... 5
6.7 Typical Characteristics ... 5
7 Parameter Measurement Information ... 6
8 Detailed Description ... 7
8.1 Overview ... 7
8.2 Functional Block Diagram ... 7
8.3 Feature Description ... 8
8.4 Device Functional Modes ... 8
9 Application and Implementation ... 9
9.1 Application Information ... 9
9.2 Typical Application ... 9
10 Power Supply Recommendations ... 11
11 Layout ... 11
11.1 Layout Guidelines ... 11
11.2 Layout Example ... 11
12 Device and Documentation Support ... 12
12.1 Documentation Support ... 12
12.2 Related Links ... 12
12.3 Community Resources ... 12
12.4 Trademarks ... 12
12.5 Electrostatic Discharge Caution ... 12
12.6 Glossary ... 12
13 Mechanical, Packaging, and Orderable Information ... 12

4 Revision History

NOTE: Page numbers for previous revisions may differ from page numbers in the current version.

Changes from Revision O (July 2004) to Revision P	Page
• Added *Pin Configuration and Functions*, *Specifications*, *ESD Ratings*, *Detailed Description*, *Application and Implementation*, *Power Supply Recommendations*, *Layout*, *Device and Documentation Support*, and *Mechanical, Packaging, and Orderable Information*.	1

Copyright © 1992–2015, Texas Instruments Incorporated

5 Pin Configuration and Functions

DB, DBQ, DW, JT, W, or PW Package
24-Pin SSOP, SOIC, CDIP, CFP, or TSSOP
Top View

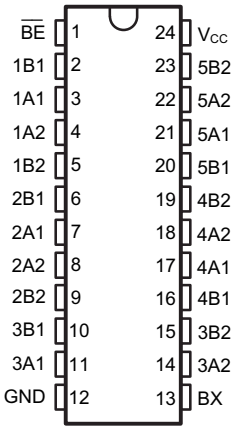

Pin Functions

PIN		I/O	DESCRIPTION
NO.	NAME		
1	$\overline{BE}$	I	Active-low input enable pin
2	1B1	I/O	Transceiver I/O pin
3	1A1	I/O	Transceiver I/O pin
4	1A2	I/O	Transceiver I/O pin
5	1B2	I/O	Transceiver I/O pin
6	2B1	I/O	Transceiver I/O pin
7	2A1	I/O	Transceiver I/O pin
8	2A2	I/O	Transceiver I/O pin
9	2B2	I/O	Transceiver I/O pin
10	3B1	I/O	Transceiver I/O pin
11	3A1	I/O	Transceiver I/O pin
12	GND	—	Ground
13	BX	I	Output select pin
14	3A2	I/O	Transceiver I/O pin
15	3B2	I/O	Transceiver I/O pin
16	4B1	I/O	Transceiver I/O pin
17	4A1	I/O	Transceiver I/O pin
18	4A2	I/O	Transceiver I/O pin
19	4B2	I/O	Transceiver I/O pin
20	5B1	I/O	Transceiver I/O pin
21	5A1	I/O	Transceiver I/O pin
22	5A2	I/O	Transceiver I/O pin
23	5B2	I/O	Transceiver I/O pin
24	V_{CC}	—	Power pin

Copyright © 1992–2015, Texas Instruments Incorporated

6 Specifications

6.1 Absolute Maximum Ratings

over operating free-air temperature range (unless otherwise noted)[1]

		MIN	MAX	UNIT
V_{CC}	Supply voltage	–0.5	7	V
V_I	Input voltage[2]	–0.5	7	V
I_O	Continuos channel current		128	mA
I_{IK}	Input clamp current ($V_{I/O}$<0)		–50	mA
T_J	Junction temperature	–65	150	°C
T_{stg}	Storage temperature	–65	150	°C

(1) Stresses beyond those listed under *Absolute Maximum Ratings* may cause permanent damage to the device. These are stress ratings only, which do not imply functional operation of the device at these or any other conditions beyond those indicated under *Recommended Operating Conditions*. Exposure to absolute-maximum-rated conditions for extended periods may affect device reliability.
(2) The input and output negative-voltage ratings may be exceeded if the input and output clamp-current ratings are observed.

6.2 ESD Ratings

			VALUE	UNIT
$V_{(ESD)}$	Electrostatic discharge	Human-body model (HBM), per ANSI/ESDA/JEDEC JS-001[1]	±3000	V
		Charged-device model (CDM), per JEDEC specification JESD22-C101[2]	±1000	

(1) JEDEC document JEP155 states that 500-V HBM allows safe manufacturing with a standard ESD control process.
(2) JEDEC document JEP157 states that 250-V CDM allows safe manufacturing with a standard ESD control process.

6.3 Recommended Operating Conditions

over operating free-air temperature range (unless otherwise noted)

			MIN	MAX	UNIT
V_{CC}	Supply voltage		4.5	5.5	V
V_{IH}	High-level input voltage		2.0		V
V_{IL}	Low-level input voltage			0.8	V
T_A	Operating free-air temperature	SN74CBT3383	0	70.0	°C
		SN54CBT3383	–55.0	125.0	

6.4 Thermal Information

THERMAL METRIC[1]		SN74CBT3383				UNIT
		DB (SSOP)	DBQ (SSOP)	DW (SOIC)	PW (TSSOP)	
		24 PINS	24 PINS	24 PINS	24 PINS	
$R_{\theta JA}$	Junction-to-ambient thermal resistance	63.0	61.0	46.0	88.0	°C/W
$R_{\theta JC(top)}$	Junction-to-case (top) thermal resistance	33.5	22.1	19.9	26.5	°C/W
$R_{\theta JB}$	Junction-to-board thermal resistance	32.0	-	19.33	-	°C/W

(1) For more information about traditional and new thermal metrics, see the *Semiconductor and IC Package Thermal Metrics* application report, SPRA953.

Copyright © 1992–2015, Texas Instruments Incorporated

6.5 Electrical Characteristics

over operating free-air temperature range (unless otherwise noted)

PARAMETER		TEST CONDITIONS			MIN	TYP(1)	MAX	UNIT
V_{IK}		V_{CC} = 4.5 V, I_I = –18 mA					–1.2	V
I_I		V_{CC} = 5.5 V, V_I = 5.5 V or GND	SN54CBT3383				±5	µA
			SN74CBT3383				±1	
I_{CC}		V_{CC} = 5.5 V, I_O = 0, V_I = V_{CC} or GND					50	µA
ΔI_{CC}(2)	Control inputs	V_{CC} = 5.5 V, One input at 3.4 V, Other inputs at V_{CC} or GND					2.5	mA
C_i	Control inputs	V_I = 3 V or 0	SN74CBT3383			3		pF
		V_I = 2.5 V	SN54CBT3383				5	
$C_{io(OFF)}$		V_O = 3 V or 0, $\overline{BE}$ = V_{CC}	SN74CBT3383			6		pF
		V_O = 2.5 V, $\overline{BE}$ = V_{CC}	SN54CBT3383				6	
r_{on}(3)	V_{CC} = 4.5 V	V_I = 0	I_I = 64 mA	SN54CBT3383		5	9.2	Ω
				SN74CBT3383		5	7	
			I_I = 30 mA	SN74CBT3383		5	7	
		V_I = 2.4 V, I_I = 15 mA	SN54CBT3383			10	17	
			SN74CBT3383			10	15	

(1) Typical values are at V_{CC} = 5 V, T_A = 25°C.
(2) This is the increase in supply current for each input that is at the specified TTL voltage level, rather than V_{CC} or GND.
(3) Measured by the voltage drop between the A and B terminals at the indicated current through the switch. On-state resistance is determined by the lowest voltage of the two (A or B) terminals.

6.6 Switching Characteristics

over recommended ranges of supply voltage and operating free-air temperature range, C_L = 50 pF (unless otherwise noted) (see Figure 2)

PARAMETER	FROM (INPUT)	TO (OUTPUT)	TEST CONDITIONS	MIN	MAX	UNIT
t_{pd}(1)	A or B	B or A	SN54CBT3383		1.5	ns
			SN74CBT3383		0.25	
t_{pd}	BX	A or B	SN54CBT3383	1	10.2	ns
			SN74CBT3383	1	9.2	
t_{en}	$\overline{BE}$	A or B	SN54CBT3383	1	10.8	ns
			SN74CBT3383	1	8.6	
t_{dis}	$\overline{BE}$	A or B	SN54CBT3383	1	8.2	ns
			SN74CBT3383	1	7.5	

(1) The propagation delay is the calculated RC time constant of the typical on-state resistance of the switch and the specified load capacitance, when driven by an ideal voltage source (zero output impedance).

6.7 Typical Characteristics

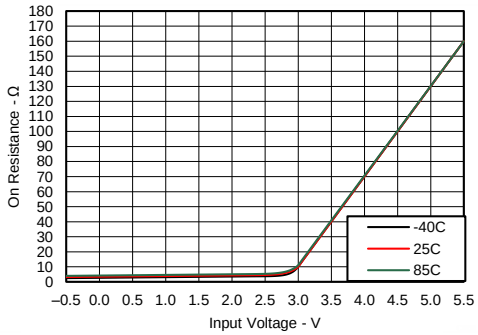

Figure 1. ON-Resistance (R_{ON}) for I_I = 64 mA Across V_I

7 Parameter Measurement Information

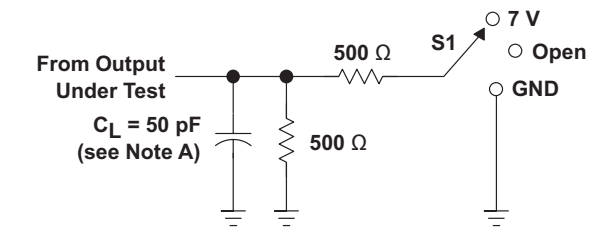

LOAD CIRCUIT

TEST	S1
t_{pd}	Open
t_{PLZ}/t_{PZL}	7 V
t_{PHZ}/t_{PZH}	Open

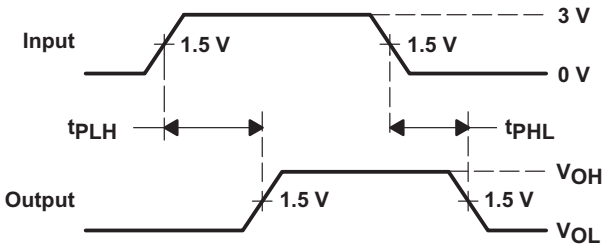

VOLTAGE WAVEFORMS
PROPAGATION DELAY TIMES

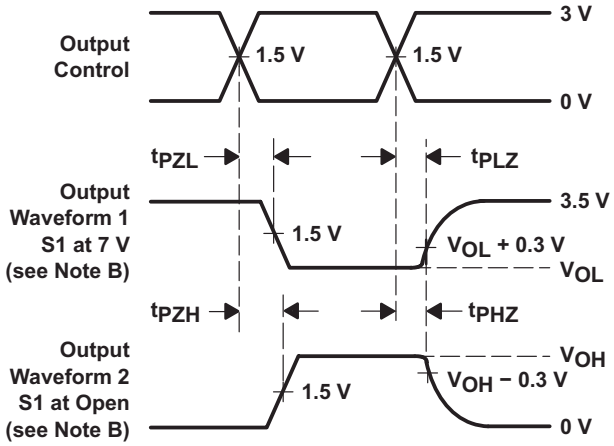

VOLTAGE WAVEFORMS
ENABLE AND DISABLE TIMES

NOTES:
A. C_L includes probe and jig capacitance.
B. Waveform 1 is for an output with internal conditions such that the output is low except when disabled by the output control. Waveform 2 is for an output with internal conditions such that the output is high except when disabled by the output control.
C. All input pulses are supplied by generators having the following characteristics: PRR ≤ 10 MHz, Z_O = 50 Ω, t_r ≤ 2.5 ns, t_f ≤ 2.5 ns.
D. The outputs are measured one at a time with one transition per measurement.
E. t_{PLZ} and t_{PHZ} are the same as t_{dis}.
F. t_{PZL} and t_{PZH} are the same as t_{en}.
G. t_{PLH} and t_{PHL} are the same as t_{pd}.

Figure 2. Load Circuit and Voltage Waveforms

Copyright © 1992–2015, Texas Instruments Incorporated

8 Detailed Description

8.1 Overview

The SNX4CBT3383 provides ten high-speed CMOS TTL-compatible bus switches. The low ON-resistance of the SNX4CBT3383 allows inputs to be connected to outputs without adding propagation delay and without generating additional ground bounce noise. The Bus Enable ($\overline{BE}$) signal turns the switches on. The Bus Exchange (BX) signal provides nibble swap of the 1A and 1B pairs of signals. This exchange configuration allows byte swapping of buses in systems. It can also be used as a 5-wide, 2-to-1 multiplexer, to create low delay barrel shifters, and so forth.

8.2 Functional Block Diagram

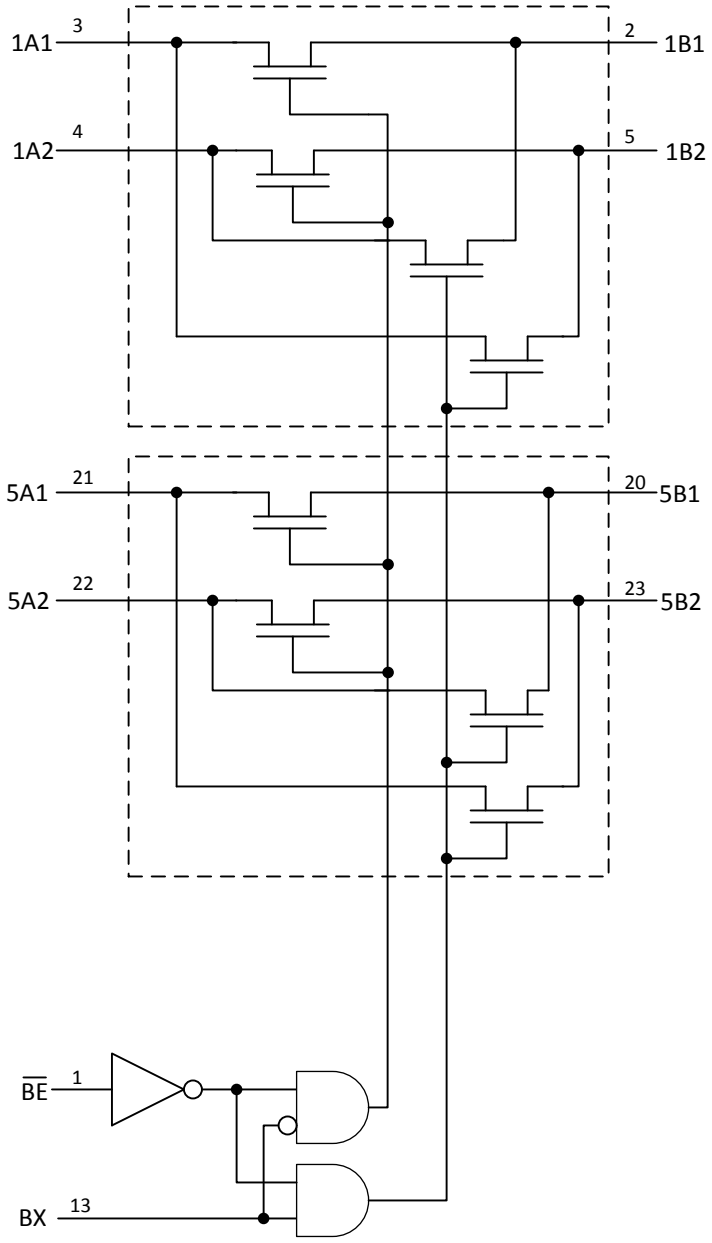

8.3 Feature Description

8.3.1 Bidirectional Data Flow With Near-Zero Propagation Delay

The SN74CBT3383 features a low propagation delay or t_{pd} that works great for multiple rail information transfer from 1A1to 1B1 and 1A2 to 1B2 for example. However, the SNX4CBT3383 also features BUS exchange functionality, which allows for bidirectional data transfers from the inputs and outputs connected on the B side. By enabling the BX pin, the outputs are now crossed, or exchanged, and data can now flow from 1A1 to 1B2 and 1A2 to 1B1 with little to no propagation delay. This can be used to enable byte swapping of buses within a system or to create a 5-wide, 2-to-1 multiplexer.

8.4 Device Functional Modes

Table 1 lists the functional modes of the SNx4CBT3383.

Table 1. Function Table

INPUTS		INPUTS / OUTPUT	
$\overline{BE}$	BX	1A1-5A1	1A2-5A2
L	L	1B1-5B1	1B2-5B2
L	H	1B2-5B2	1B1-5B1
H	X	Z	Z

Copyright © 1992–2015, Texas Instruments Incorporated

9 Application and Implementation

NOTE

Information in the following applications sections is not part of the TI component specification, and TI does not warrant its accuracy or completeness. TI's customers are responsible for determining suitability of components for their purposes. Customers should validate and test their design implementation to confirm system functionality.

9.1 Application Information

The SN74CBT3383 can be used to multiplex up to 5 channels simultaneously in a 2:1 configuration. The application shown here is a 2-bit bus being multiplexed between two devices. The $\overline{BE}$ and BX pins are used to control the chip from the bus controller. This is a very generic example, and could apply to many situations. If an application requires only one bit control or exchange, remember to tie the unused bit to high or low. By using another bus controller you can enable exchange across A1 and A2 to B1 and B2, allowing for greater system communication.

9.2 Typical Application

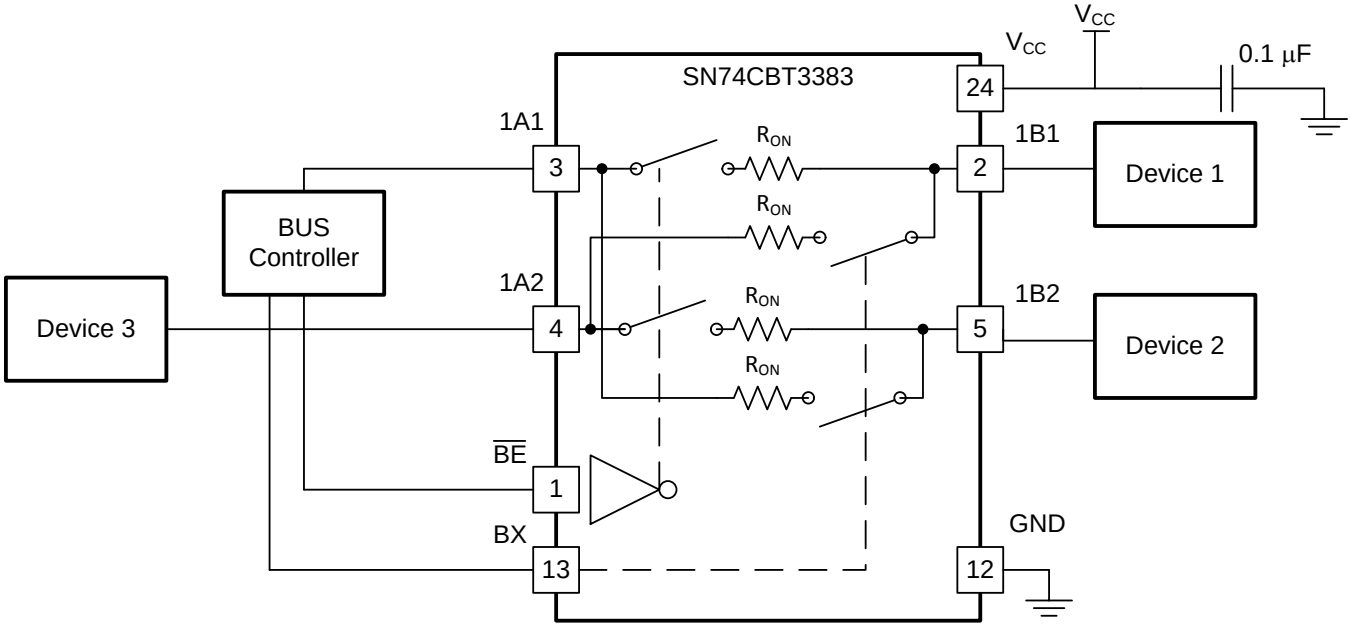

Figure 3. 1:2 Multiplexer or Bus and Selector Using 1 Bus Controller

9.2.1 Design Requirements

1. Recommended Input Conditions:
   – For specified high and low levels, see V_{IH} and V_{IL} in *Recommended Operating Conditions*.
2. Recommended Output Conditions:
   – Load currents must not exceed 128 mA per channel.
3. Frequency Selection Criterion:
   – Maximum frequency tested is 200 MHz.
   – Added trace resistance and capacitance can reduce maximum frequency capability; use layout practices as directed in *Layout*.

Typical Application (continued)

9.2.2 Detailed Design Procedure

The 2-bit bus is connected directly to the 1A1, 1A2 on the SN74CBT3383, which essentially combines in the bus controller to form a single input or split bus bits. When $\overline{BE}$ is low and BX is low, the selected bus is using 1A1 and 1B1 as inputs and outputs. This means that Device 1 is connected to the bus controller and Device 2 is connected to Device 3 when $\overline{BE}$ is low and BX is low. While keeping $\overline{BE}$ low and using BX high, we can enable communication from the bus controller to Device 2 and from Device 1 to Device 3. This setup is especially useful when two controllers or devices need to share the same data from Device 1 and Device 2 and the bus addresses are limited or hard coded.

The 0.1-µF capacitor on V_{CC} is a decoupling capacitor and should be placed as close as possible to the device.

9.2.3 Application Curve

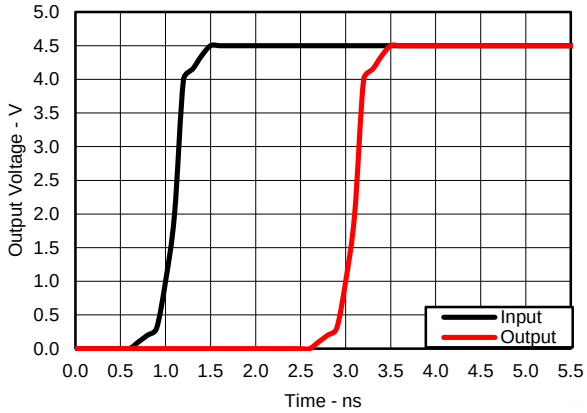

V_{CC} = 4.5 V

Figure 4. Propagation Delay (t_{pd}) Simulation Results

Copyright © 1992–2015, Texas Instruments Incorporated

10 Power Supply Recommendations

The power supply can be any voltage between the minimum and maximum supply voltage rating listed in the *Recommended Operating Conditions* table. Each V_{CC} terminal must have a good bypass capacitor to prevent power disturbance. For devices with a single supply, a 0.1-μF bypass capacitor is recommended. If multiple pins are labeled V_{CC}, then a 0.01-μF or 0.022-μF capacitor is recommended for each V_{CC} because the V_{CC} pins are tied together internally. For devices with dual-supply pins operating at different voltages, for example V_{CC} and V_{DD}, a 0.1-μF bypass capacitor is recommended for each supply pin. To reject different frequencies of noise, use multiple bypass capacitors in parallel. Capacitors with values of 0.1 μF and 1 μF are commonly used in parallel. The bypass capacitor should be installed as close to the power terminal as possible for best results.

11 Layout

11.1 Layout Guidelines

Reflections and matching are closely related to the loop antenna theory but are different enough to be discussed separately from the theory. When a PCB trace turns a corner at a 90° angle, a reflection can occur. A reflection occurs primarily because of the change of width of the trace. At the apex of the turn, the trace width increases to 1.414 times the width. This increase upsets the transmission-line characteristics, especially the distributed capacitance and self-inductance of the trace which results in the reflection. Not all PCB traces can be straight and therefore some traces must turn corners. Figure 5 shows progressively better techniques of rounding corners. Only the last example (BEST) maintains constant trace width and minimizes reflections.

11.2 Layout Example

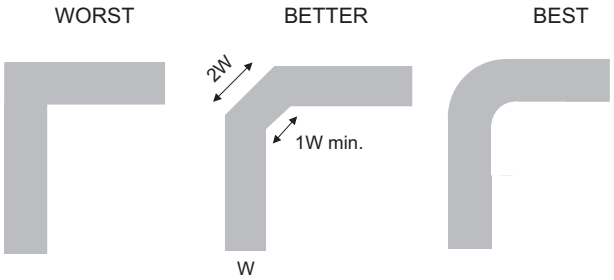

Figure 5. Trace Example

12 Device and Documentation Support

12.1 Documentation Support

12.1.1 Related Documentation

For related documentation, see *Voltage Clamps Made Easy*, SCEA045.

12.2 Related Links

The table below lists quick access links. Categories include technical documents, support and community resources, tools and software, and quick access to sample or buy.

Table 2. Related Links

PARTS	PRODUCT FOLDER	SAMPLE & BUY	TECHNICAL DOCUMENTS	TOOLS & SOFTWARE	SUPPORT & COMMUNITY
SN74CBT3383	Click here	Click here	Click here	Click here	Click here
SN54CBT3383	Click here	Click here	Click here	Click here	Click here

12.3 Community Resources

The following links connect to TI community resources. Linked contents are provided "AS IS" by the respective contributors. They do not constitute TI specifications and do not necessarily reflect TI's views; see TI's Terms of Use.

TI E2E™ Online Community ***TI's Engineer-to-Engineer (E2E) Community.*** Created to foster collaboration among engineers. At e2e.ti.com, you can ask questions, share knowledge, explore ideas and help solve problems with fellow engineers.

Design Support ***TI's Design Support*** Quickly find helpful E2E forums along with design support tools and contact information for technical support.

12.4 Trademarks

E2E is a trademark of Texas Instruments.
All other trademarks are the property of their respective owners.

12.5 Electrostatic Discharge Caution

These devices have limited built-in ESD protection. The leads should be shorted together or the device placed in conductive foam during storage or handling to prevent electrostatic damage to the MOS gates.

12.6 Glossary

SLYZ022 — *TI Glossary*.

This glossary lists and explains terms, acronyms, and definitions.

13 Mechanical, Packaging, and Orderable Information

The following pages include mechanical, packaging, and orderable information. This information is the most current data available for the designated devices. This data is subject to change without notice and revision of this document. For browser-based versions of this data sheet, refer to the left-hand navigation.

Copyright © 1992–2015, Texas Instruments Incorporated

PACKAGING INFORMATION

Orderable Device	Status (1)	Package Type	Package Drawing	Pins	Package Qty	Eco Plan (2)	Lead finish/ Ball material (6)	MSL Peak Temp (3)	Op Temp (°C)	Device Marking (4/5)	Samples
SN74CBT3383DBQR	ACTIVE	SSOP	DBQ	24	2500	Green (RoHS & no Sb/Br)	NIPDAU	Level-2-260C-1 YEAR	0 to 70	CBT3383	Samples
SN74CBT3383DBR	ACTIVE	SSOP	DB	24	2000	Green (RoHS & no Sb/Br)	NIPDAU	Level-1-260C-UNLIM	0 to 70	CU383	Samples
SN74CBT3383DW	ACTIVE	SOIC	DW	24	25	Green (RoHS & no Sb/Br)	NIPDAU	Level-1-260C-UNLIM	0 to 70	CBT3383	Samples
SN74CBT3383DWR	ACTIVE	SOIC	DW	24	2000	Green (RoHS & no Sb/Br)	NIPDAU	Level-1-260C-UNLIM	0 to 70	CBT3383	Samples
SN74CBT3383DWRG4	ACTIVE	SOIC	DW	24	2000	Green (RoHS & no Sb/Br)	NIPDAU	Level-1-260C-UNLIM	0 to 70	CBT3383	Samples
SN74CBT3383PW	ACTIVE	TSSOP	PW	24	60	Green (RoHS & no Sb/Br)	NIPDAU	Level-1-260C-UNLIM	0 to 70	CU383	Samples
SN74CBT3383PWR	ACTIVE	TSSOP	PW	24	2000	Green (RoHS & no Sb/Br)	NIPDAU	Level-1-260C-UNLIM	0 to 70	CU383	Samples
SN74CBT3383PWRG4	ACTIVE	TSSOP	PW	24	2000	Green (RoHS & no Sb/Br)	NIPDAU	Level-1-260C-UNLIM	0 to 70	CU383	Samples
SNJ54CBT3383JT	LIFEBUY	CDIP	JT	24		TBD	Call TI	Call TI	-55 to 125	5962-9668801QL A SNJ54CBT3383JT	
SNJ54CBT3383W	LIFEBUY	CFP	W	24		TBD	Call TI	Call TI	-55 to 125	5962-9668801QK A SNJ54CBT3383W	

(1) The marketing status values are defined as follows:
ACTIVE: Product device recommended for new designs.
LIFEBUY: TI has announced that the device will be discontinued, and a lifetime-buy period is in effect.
NRND: Not recommended for new designs. Device is in production to support existing customers, but TI does not recommend using this part in a new design.
PREVIEW: Device has been announced but is not in production. Samples may or may not be available.
OBSOLETE: TI has discontinued the production of the device.

(2) **RoHS:** TI defines "RoHS" to mean semiconductor products that are compliant with the current EU RoHS requirements for all 10 RoHS substances, including the requirement that RoHS substance do not exceed 0.1% by weight in homogeneous materials. Where designed to be soldered at high temperatures, "RoHS" products are suitable for use in specified lead-free processes. TI may reference these types of products as "Pb-Free".
RoHS Exempt: TI defines "RoHS Exempt" to mean products that contain lead but are compliant with EU RoHS pursuant to a specific EU RoHS exemption.

Green: TI defines "Green" to mean the content of Chlorine (Cl) and Bromine (Br) based flame retardants meet JS709B low halogen requirements of <=1000ppm threshold. Antimony trioxide based flame retardants must also meet the <=1000ppm threshold requirement.

(3) MSL, Peak Temp. - The Moisture Sensitivity Level rating according to the JEDEC industry standard classifications, and peak solder temperature.

(4) There may be additional marking, which relates to the logo, the lot trace code information, or the environmental category on the device.

(5) Multiple Device Markings will be inside parentheses. Only one Device Marking contained in parentheses and separated by a "~" will appear on a device. If a line is indented then it is a continuation of the previous line and the two combined represent the entire Device Marking for that device.

(6) Lead finish/Ball material - Orderable Devices may have multiple material finish options. Finish options are separated by a vertical ruled line. Lead finish/Ball material values may wrap to two lines if the finish value exceeds the maximum column width.

Important Information and Disclaimer: The information provided on this page represents TI's knowledge and belief as of the date that it is provided. TI bases its knowledge and belief on information provided by third parties, and makes no representation or warranty as to the accuracy of such information. Efforts are underway to better integrate information from third parties. TI has taken and continues to take reasonable steps to provide representative and accurate information but may not have conducted destructive testing or chemical analysis on incoming materials and chemicals. TI and TI suppliers consider certain information to be proprietary, and thus CAS numbers and other limited information may not be available for release.

In no event shall TI's liability arising out of such information exceed the total purchase price of the TI part(s) at issue in this document sold by TI to Customer on an annual basis.

OTHER QUALIFIED VERSIONS OF SN54CBT3383, SN74CBT3383 :

- Catalog: SN74CBT3383
- Military: SN54CBT3383

NOTE: Qualified Version Definitions:

- Catalog - TI's standard catalog product
- Military - QML certified for Military and Defense Applications

TAPE AND REEL INFORMATION

REEL DIMENSIONS

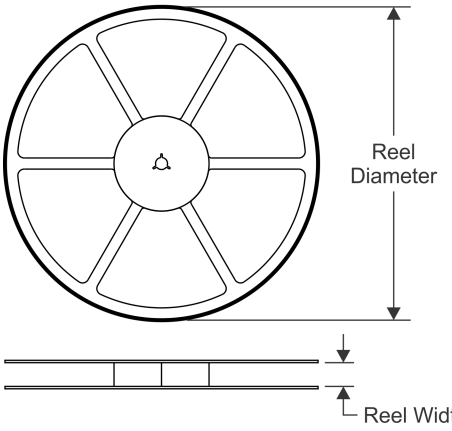

TAPE DIMENSIONS

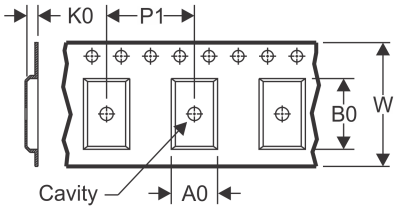

A0	Dimension designed to accommodate the component width
B0	Dimension designed to accommodate the component length
K0	Dimension designed to accommodate the component thickness
W	Overall width of the carrier tape
P1	Pitch between successive cavity centers

QUADRANT ASSIGNMENTS FOR PIN 1 ORIENTATION IN TAPE

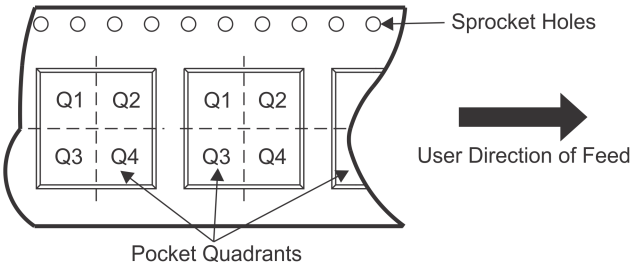

*All dimensions are nominal

Device	Package Type	Package Drawing	Pins	SPQ	Reel Diameter (mm)	Reel Width W1 (mm)	A0 (mm)	B0 (mm)	K0 (mm)	P1 (mm)	W (mm)	Pin1 Quadrant
SN74CBT3383DBQR	SSOP	DBQ	24	2500	330.0	16.4	6.5	9.0	2.1	8.0	16.0	Q1
SN74CBT3383DBR	SSOP	DB	24	2000	330.0	16.4	8.2	8.8	2.5	12.0	16.0	Q1
SN74CBT3383DWR	SOIC	DW	24	2000	330.0	24.4	10.75	15.7	2.7	12.0	24.0	Q1
SN74CBT3383PWR	TSSOP	PW	24	2000	330.0	16.4	6.95	8.3	1.6	8.0	16.0	Q1

TAPE AND REEL BOX DIMENSIONS

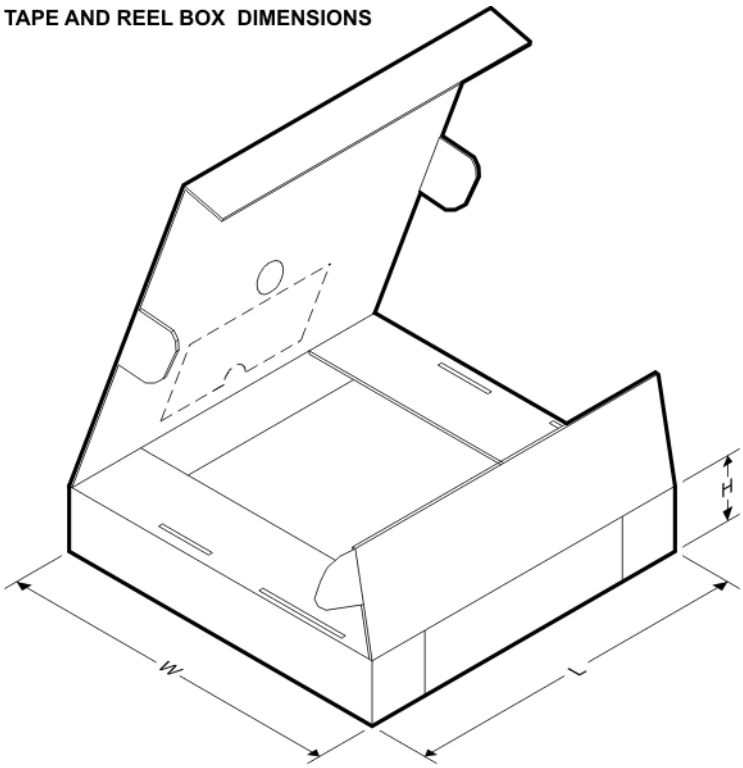

*All dimensions are nominal

Device	Package Type	Package Drawing	Pins	SPQ	Length (mm)	Width (mm)	Height (mm)
SN74CBT3383DBQR	SSOP	DBQ	24	2500	367.0	367.0	38.0
SN74CBT3383DBR	SSOP	DB	24	2000	367.0	367.0	38.0
SN74CBT3383DWR	SOIC	DW	24	2000	350.0	350.0	43.0
SN74CBT3383PWR	TSSOP	PW	24	2000	367.0	367.0	38.0

JT (R-GDIP-T)** **CERAMIC DUAL-IN-LINE**

24 LEADS SHOWN

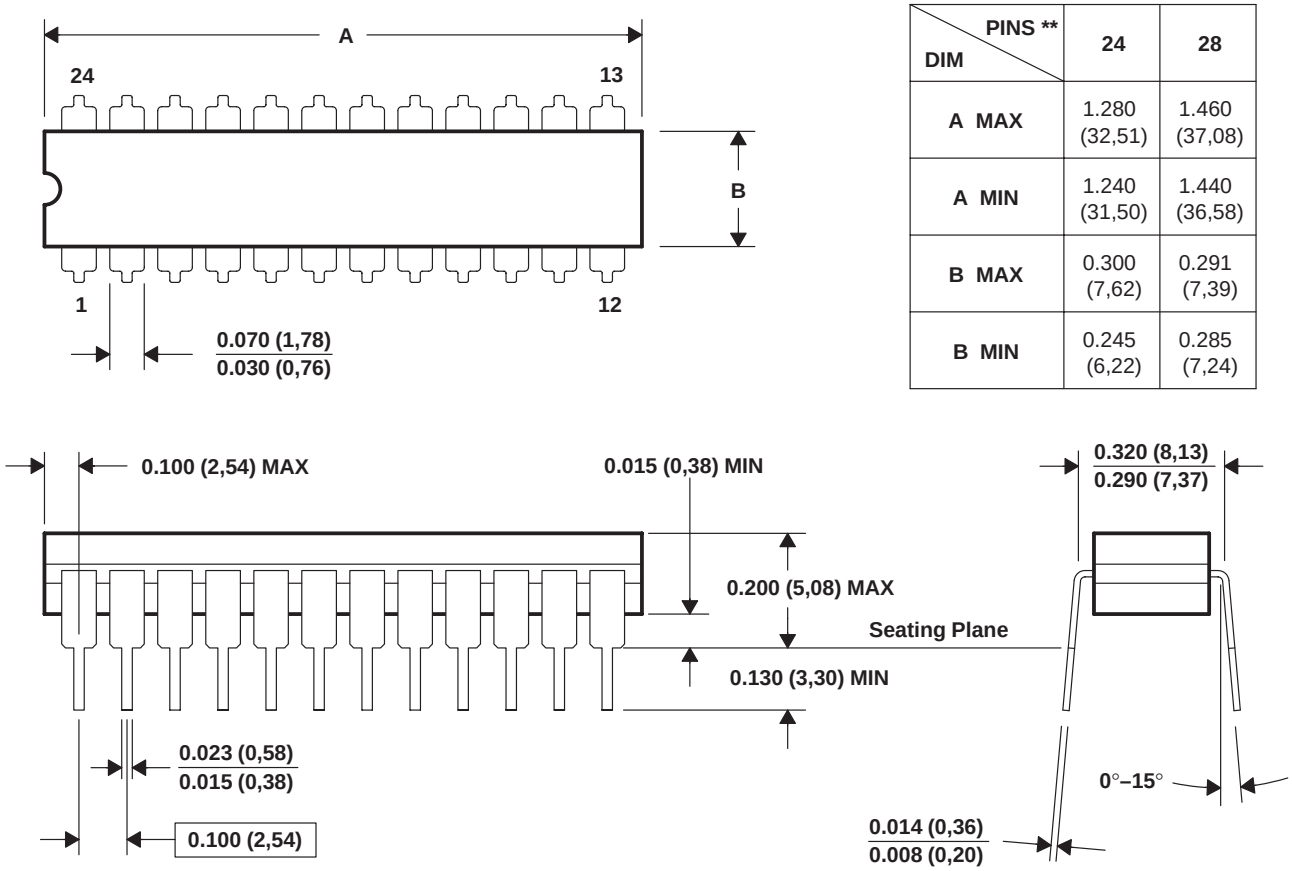

DIM \ PINS **	24	28
A MAX	1.280 (32,51)	1.460 (37,08)
A MIN	1.240 (31,50)	1.440 (36,58)
B MAX	0.300 (7,62)	0.291 (7,39)
B MIN	0.245 (6,22)	0.285 (7,24)

NOTES: A. All linear dimensions are in inches (millimeters).
B. This drawing is subject to change without notice.
C. This package can be hermetically sealed with a ceramic lid using glass frit.
D. Index point is provided on cap for terminal identification.
E. Falls within MIL STD 1835 GDIP3-T24, GDIP4-T28, and JEDEC MO-058 AA, MO-058 AB

DBQ (R–PDSO–G24) PLASTIC SMALL–OUTLINE PACKAGE

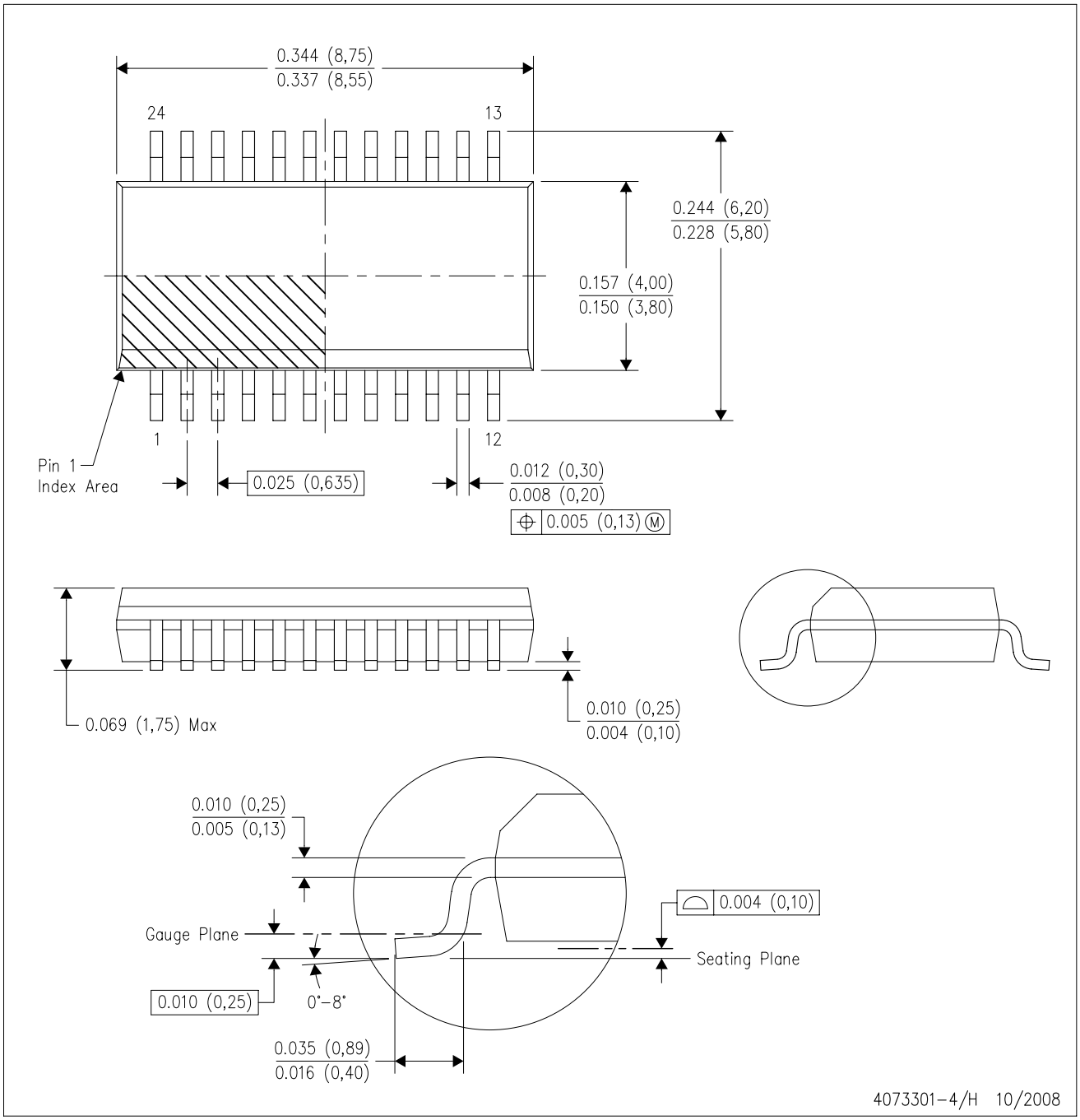

NOTES:
A. All linear dimensions are in inches (millimeters).
B. This drawing is subject to change without notice.
C. Body dimensions do not include mold flash or protrusion not to exceed 0.006 (0,15) per side.
D. Falls within JEDEC MO–137 variation AE.

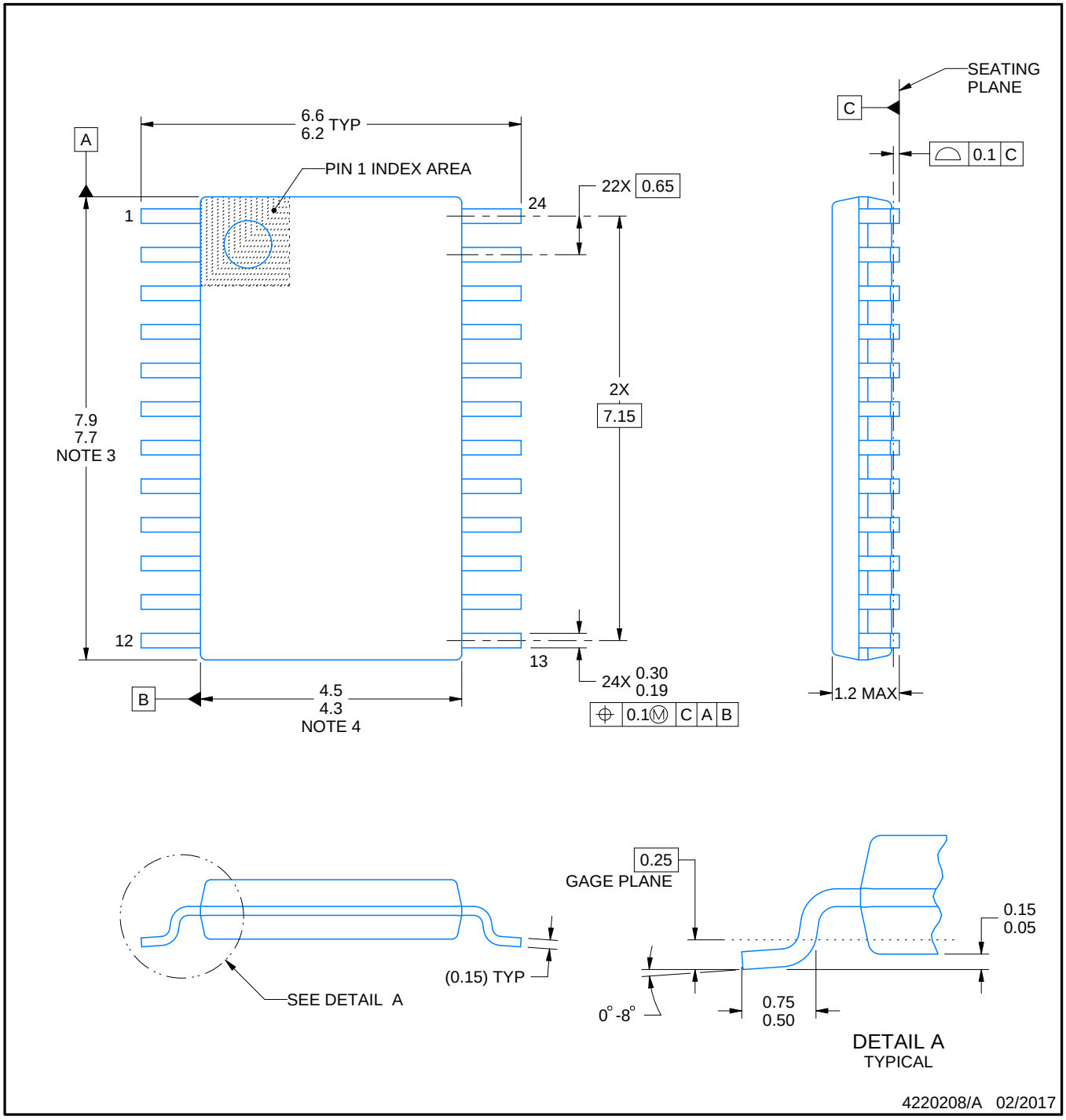

NOTES:

1. All linear dimensions are in millimeters. Any dimensions in parenthesis are for reference only. Dimensioning and tolerancing per ASME Y14.5M.
2. This drawing is subject to change without notice.
3. This dimension does not include mold flash, protrusions, or gate burrs. Mold flash, protrusions, or gate burrs shall not exceed 0.15 mm per side.
4. This dimension does not include interlead flash. Interlead flash shall not exceed 0.25 mm per side.
5. Reference JEDEC registration MO-153.

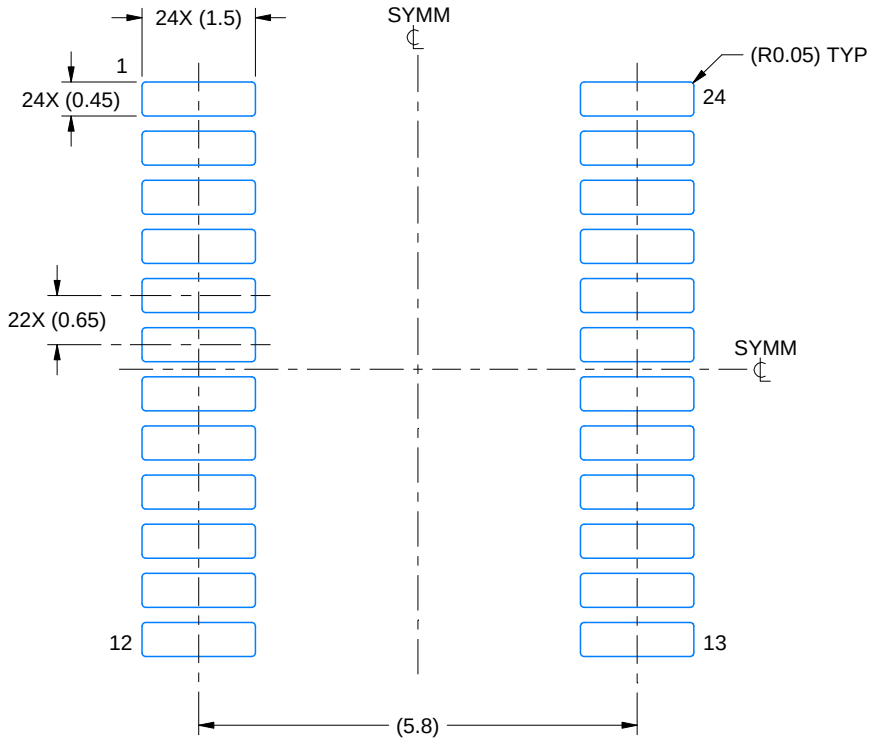

LAND PATTERN EXAMPLE
EXPOSED METAL SHOWN
SCALE: 10X

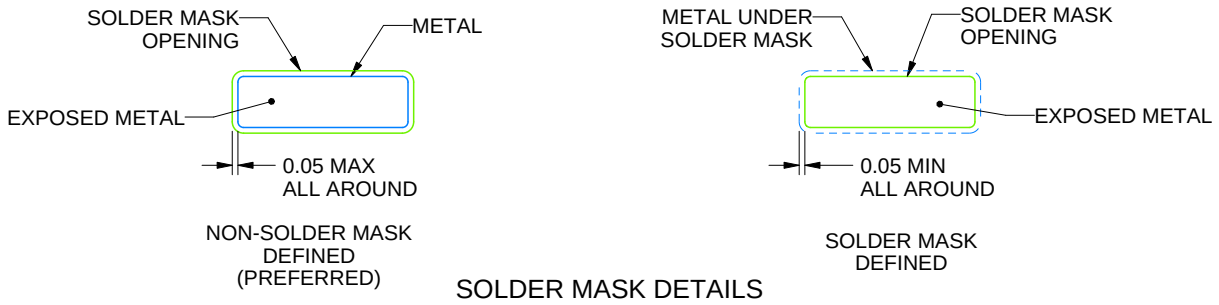

SOLDER MASK DETAILS

4220208/A 02/2017

NOTES: (continued)

6. Publication IPC-7351 may have alternate designs.
7. Solder mask tolerances between and around signal pads can vary based on board fabrication site.

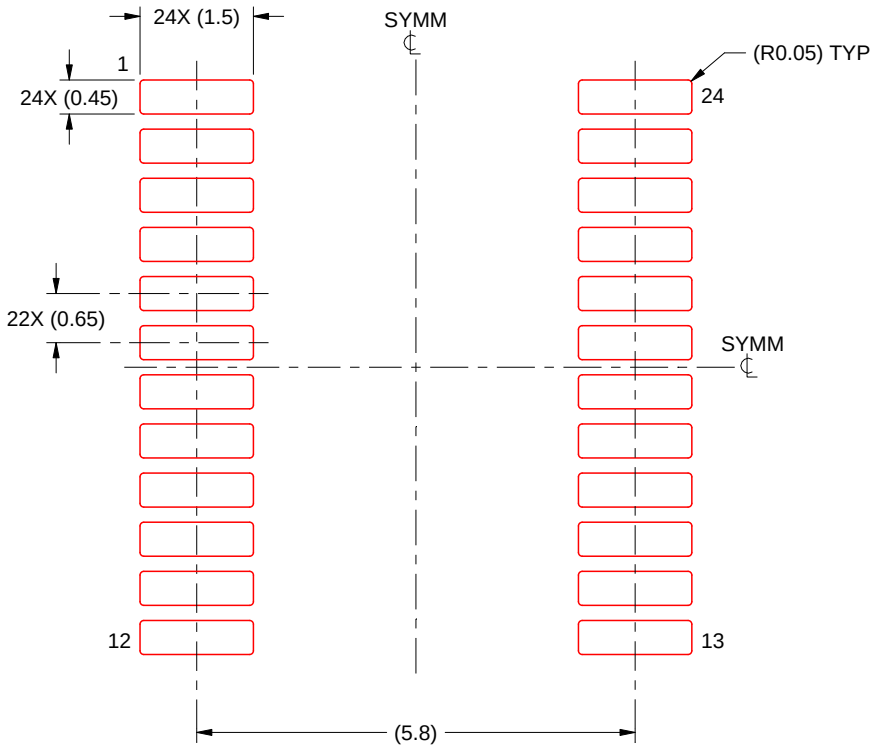

SOLDER PASTE EXAMPLE
BASED ON 0.125 mm THICK STENCIL
SCALE: 10X

4220208/A 02/2017

NOTES: (continued)

8. Laser cutting apertures with trapezoidal walls and rounded corners may offer better paste release. IPC-7525 may have alternate design recommendations.
9. Board assembly site may have different recommendations for stencil design.

W (R–GDFP–F24) CERAMIC DUAL FLATPACK

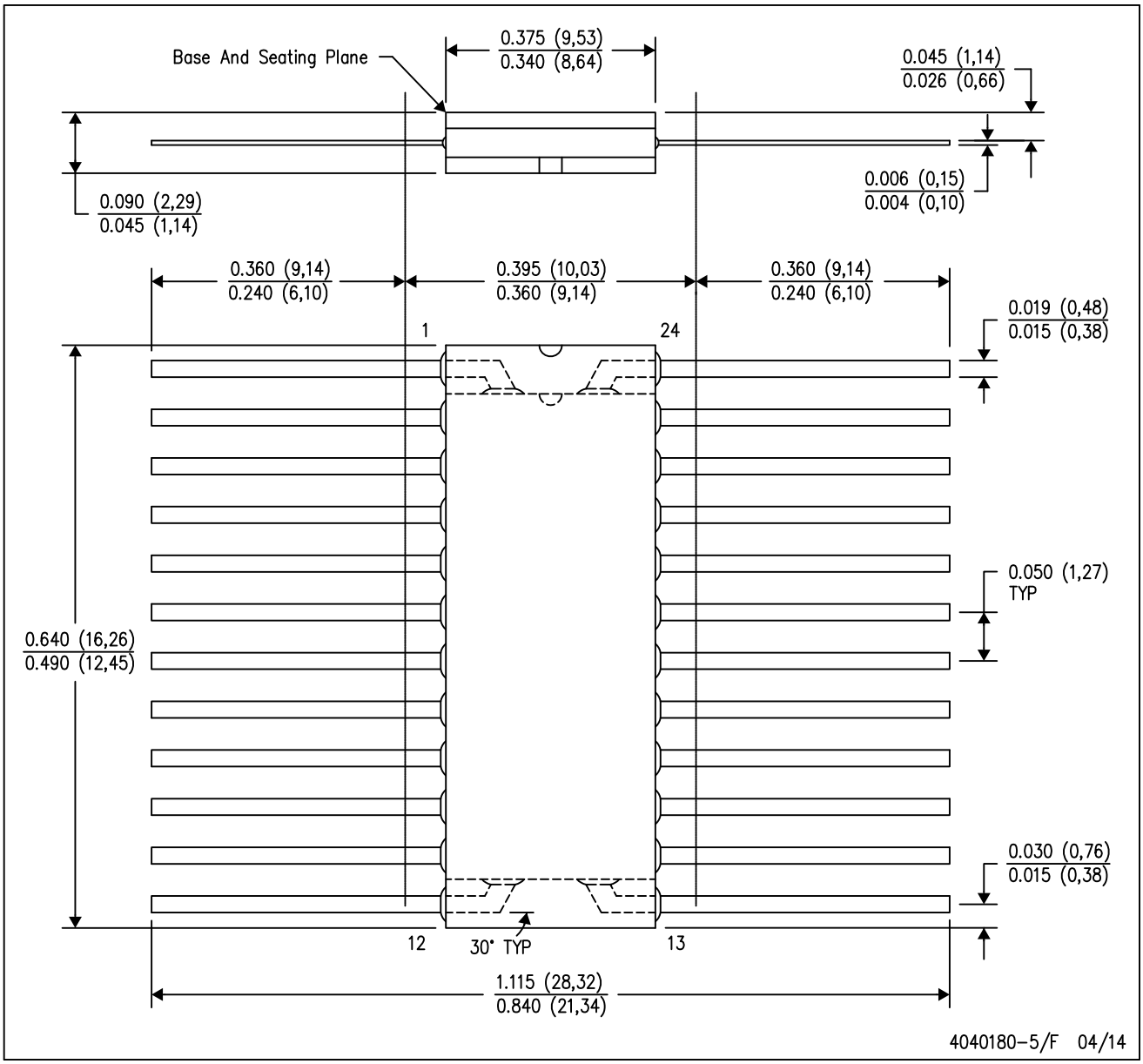

NOTES:
A. All linear dimensions are in inches (millimeters).
B. This drawing is subject to change without notice.
C. This package can be hermetically sealed with a ceramic lid using glass frit.
D. Index point is provided on cap for terminal identification only.
E. Falls within Mil–Std 1835 GDFP2–F20

DW (R–PDSO–G24) PLASTIC SMALL OUTLINE

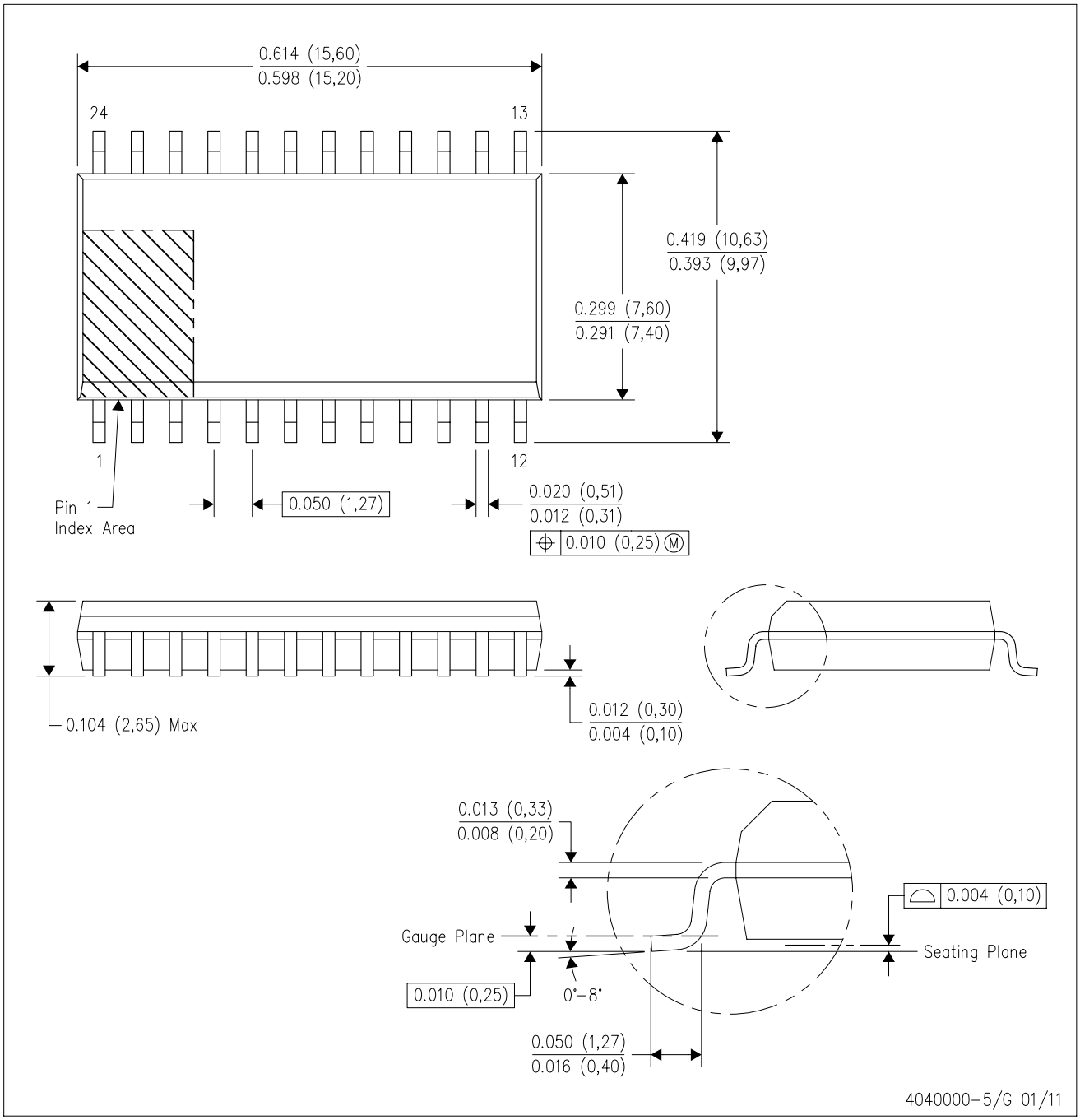

NOTES:
A. All linear dimensions are in inches (millimeters). Dimensioning and tolerancing per ASME Y14.5M–1994.
B. This drawing is subject to change without notice.
C. Body dimensions do not include mold flash or protrusion not to exceed 0.006 (0,15).
D. Falls within JEDEC MS–013 variation AD.

DB (R-PDSO-G)** **PLASTIC SMALL-OUTLINE**

28 PINS SHOWN

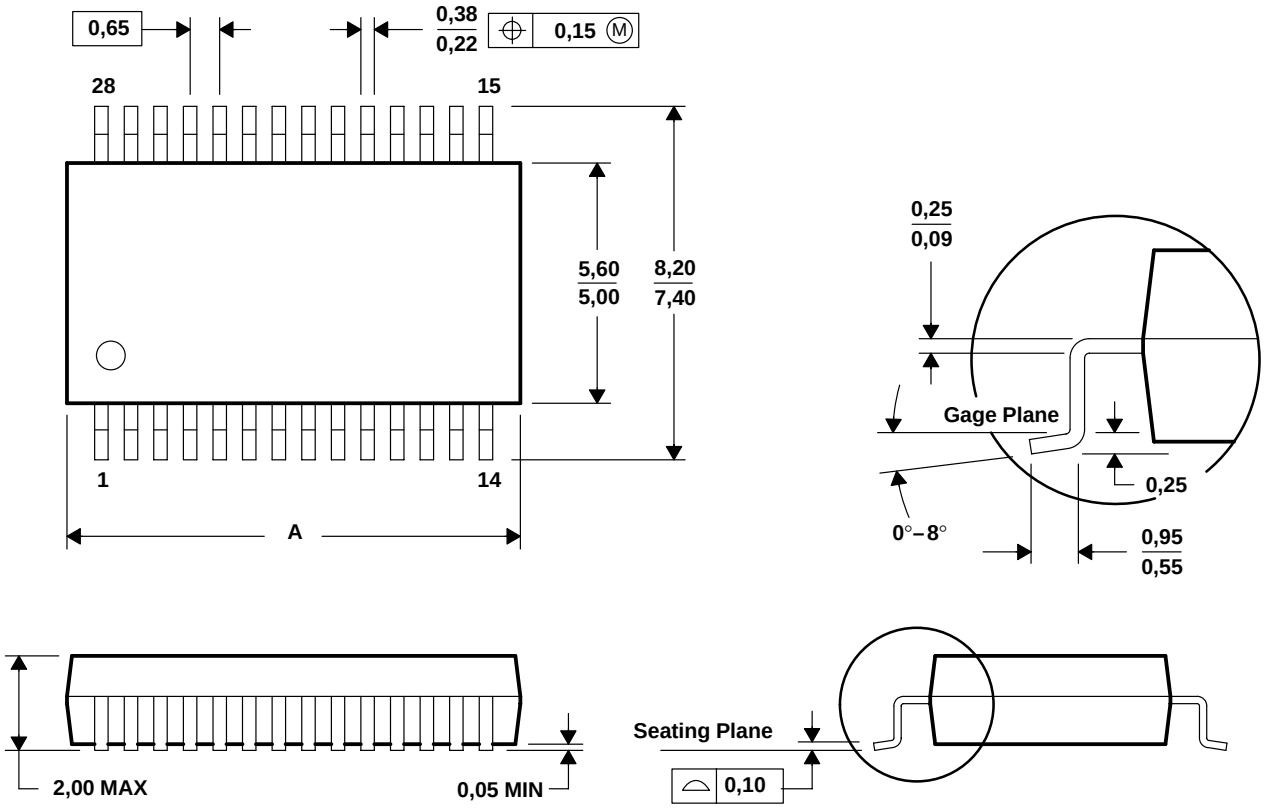

DIM \ PINS **	14	16	20	24	28	30	38
A MAX	6,50	6,50	7,50	8,50	10,50	10,50	12,90
A MIN	5,90	5,90	6,90	7,90	9,90	9,90	12,30

4040065 /E 12/01

NOTES: A. All linear dimensions are in millimeters.
B. This drawing is subject to change without notice.
C. Body dimensions do not include mold flash or protrusion not to exceed 0,15.
D. Falls within JEDEC MO-150

IMPORTANT NOTICE AND DISCLAIMER

TI PROVIDES TECHNICAL AND RELIABILITY DATA (INCLUDING DATASHEETS), DESIGN RESOURCES (INCLUDING REFERENCE DESIGNS), APPLICATION OR OTHER DESIGN ADVICE, WEB TOOLS, SAFETY INFORMATION, AND OTHER RESOURCES “AS IS” AND WITH ALL FAULTS, AND DISCLAIMS ALL WARRANTIES, EXPRESS AND IMPLIED, INCLUDING WITHOUT LIMITATION ANY IMPLIED WARRANTIES OF MERCHANTABILITY, FITNESS FOR A PARTICULAR PURPOSE OR NON-INFRINGEMENT OF THIRD PARTY INTELLECTUAL PROPERTY RIGHTS.

These resources are intended for skilled developers designing with TI products. You are solely responsible for (1) selecting the appropriate TI products for your application, (2) designing, validating and testing your application, and (3) ensuring your application meets applicable standards, and any other safety, security, or other requirements. These resources are subject to change without notice. TI grants you permission to use these resources only for development of an application that uses the TI products described in the resource. Other reproduction and display of these resources is prohibited. No license is granted to any other TI intellectual property right or to any third party intellectual property right. TI disclaims responsibility for, and you will fully indemnify TI and its representatives against, any claims, damages, costs, losses, and liabilities arising out of your use of these resources.

TI’s products are provided subject to TI’s Terms of Sale (www.ti.com/legal/termsofsale.html) or other applicable terms available either on ti.com or provided in conjunction with such TI products. TI’s provision of these resources does not expand or otherwise alter TI’s applicable warranties or warranty disclaimers for TI products.

Mailing Address: Texas Instruments, Post Office Box 655303, Dallas, Texas 75265
Copyright © 2020, Texas Instruments Incorporated