General Description

This document explains how the Munich (USB2PMB2#) adapter board receives commands from a laptop through the USB to create an I²C/SPI interface. Hardware design files as well as results on interfacing USB2PMB2# with **MAX11300PMB1, Santa Fe (MAXREFDES5#)**, **Campbell (MAXREFDES4#)**, **Fresno (MAXREFDES11#)**, and **Corona (MAXREFDES12#)** are provided.

Portability has become another word for convenience. These days, almost all of us carry laptops, and this advantage can be used to showcase parts to the customers offering solutions that can cater to their needs. To have that convenience, we need to have a board that interfaces with our laptops to the signal chain electronics that are present on many of the industrial, medical, and consumer applications. This adapter board serves this purpose of being a bridge between your laptop and your I²C/SPI-enabled devices.

The Maxim USB2PMB2# board requires custom software and can be ordered together as an evaluation system (EV system). The Munich design integrates a low-power, 1.2A, PWM step-down DC-DC converter (MAX1556); a dual, high-speed, USB-to-multipurpose UART/FIFO IC (FT2232HL), high-speed USB switches, and a 4K MICROWIRE®-compatible serial EEPROM. This Munich adapter board is used to enable USB-to-I²C/SPI interface for any Pmod™-compatible plug-in peripheral modules such as the Maxim Campbell, Santa Fe, Fresno, and Corona reference designs.

Ordering information for EV systems is included in the EV kits' corresponding data sheet. An EV system is an EV kit combined with an interface board such as a USB2PMB2# and custom software. Refer to the appropriate EV kit data sheet for quick start and detailed operating instructions. The USB2PMB2# has been tested on Windows® 7, Windows 8, and Windows XP®.

Adapter Board Contents

- USB2PMB2# Board
- Mini-USB Cable

Features

- USB-to-I²C/SPI Interface
- Small PCB Area
- Pmod™-Compatible Form Factor

Applications

- Industrial Sensors
- Process Control
- Industrial Automation
- PLCs
- Medical

***Ordering Information* appears at end of data sheet.**

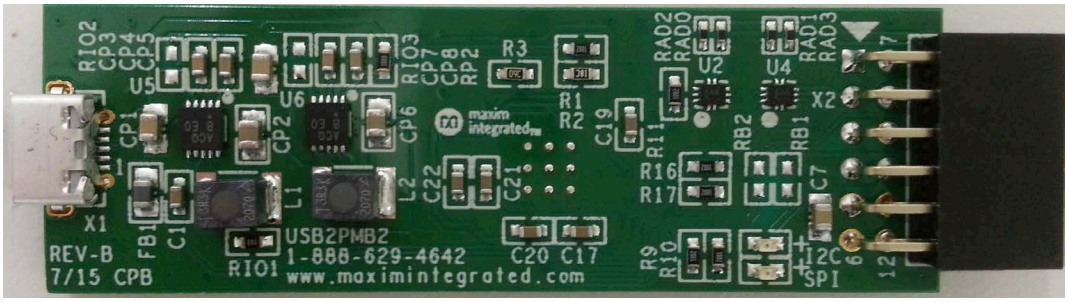

Figure 1. Munich USB2PMB2# Board

MICROWIRE is a registered trademark of National Semiconductor Corp.
Pmod is a trademark of Digilent Inc.
Windows is a registered trademark and registered service mark and Windows XP is a registered trademark of Microsoft Corporation.

19-7743; Rev 0; 9/15

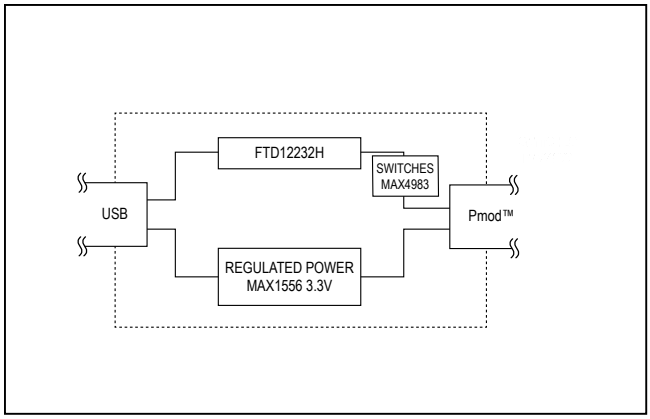

Figure 2. Munich Subsystem Block Diagram

Detailed Description of Hardware

This Munich board uses the FT2232HL (IC1), a USB 2.0 high-speed (480Mbps)-to-UART/FIFO IC, to process commands sent by a program running on the PC. Each particular EV kit has its own custom software specific to that kit. The operation of this board is USB-to-dual-channel I^{2}C and SPI engine.

The V_{CCIO} (3.3V) voltage supply is generated by the 27µA low quiescent current, 1.2A efficient PWM step-down DC-DC converter, MAX1556ETB (IC2). The 5V supply voltage input for this IC is provided by the Mini-USB supply terminal available from the laptop. The V_{CCIO} pin provides power to the FDTI chip's V_{REGIN} pin and its internal oscillator though an LC filter, 4K MICROWIRE EEPROM (93LC66BT). The USB-to-I^{2}C/SPI engine is powered by 3.3V (V_{CCIO}) at the V_{REGIN} pin and the core voltage of 1.8V for the IC is generated at V_{REGOUT}. This V_{CORE} is used within the FTDI IC itself for its internal logic processes. There is an external 12MHz crystal across OSCI and OSCO pins of FTDI IC.

Pmod Supply Voltage

The Munich is also designed to supply power to external boards (Santa Fe, Campbell, Fresno, and Corona) through the connector X2. It is intended to provide power supply to the interface circuitry present in the connected driver boards.

Pmod SPI Connector Output Pin and Connector Input in Santa Fe, Campbell, Fresno, Corona Driver Boards

Figure 3 shows the pin configuration for the SPI-compatible connector at the USB2PMB2# board. Figure 4 depicts the pin configuration of connector found in Santa Fe, Campbell, Fresno, and Corona. The connector type is female on the USB2PMB2# board and male type on the drivers.

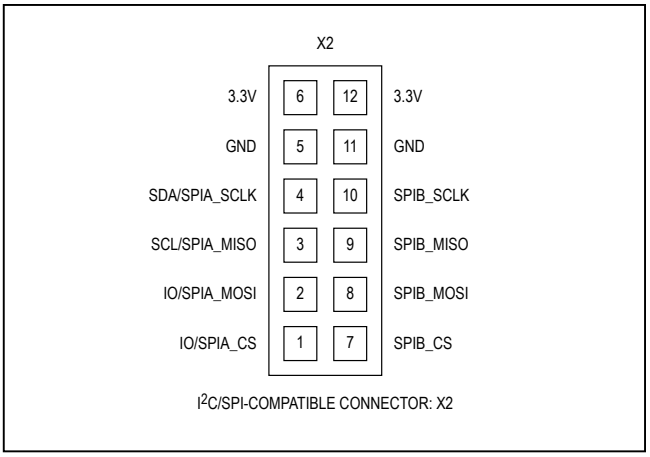

Figure 3. X2: Pmod I^{2}C/SPI Connector Pin Configuration

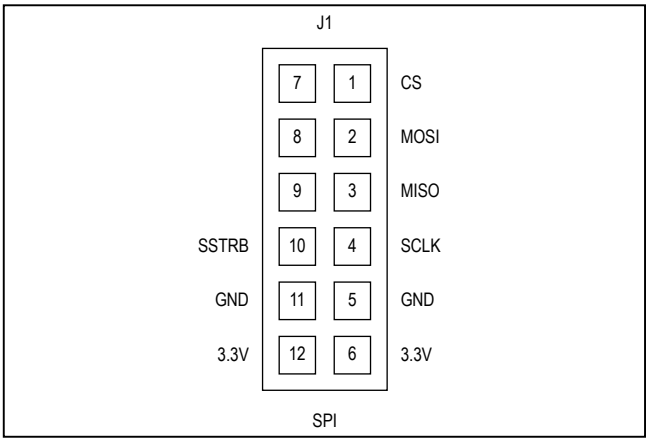

Figure 4. SPI Connector Inputs Found in Santa Fe, Campbell, Fresno, and Corona

Quick Start

Required Equipment

- PC with Windows OS (Windows XP, Windows Vista, Windows 7, or Windows8) with two USB ports
- Munich (USB2PMB2#) Board
- A-to-Mini-B USB cable
- USB2PMB2# custom software
- Any SPI interface device for communication like Santa Fe (MAXREFDES5#) board

Procedure

1) Go to www.maximintegrated.com/evkitsoftware to download the most recent version of the Munich board software, **MUNICH GUI**. Save the software to a temporary folder and decompress the Munich_GUISetupV2.04.zip file.
2) Connect the USB cable between the Munich board and the PC; the USB driver is installed automatically.
3) Ensure that the companion SPI interface device's jumper settings are correct. Refer to your companion device's documentation.
4) Connect the Munich board's 2x6-pin right-angle connector to the companion device's 2x6-pin right-angle header.

Detailed Description of Software

Graphical User Interface (GUI)

1) Once the Munich board is connected with the companion device, open the **MUNICH GUI.exe** (double-click) software.
2) Start the Munich board software and select the tab sheet that corresponds to the companion device as shown in Figure 5, the Munich GUI.
3) Press the **Scan Devices** pushbutton to scan the available Munich boards connected to the computer. This allows the user to test multiple companion driver boards at the same time. Each Munich board has a unique ID that the software determines.

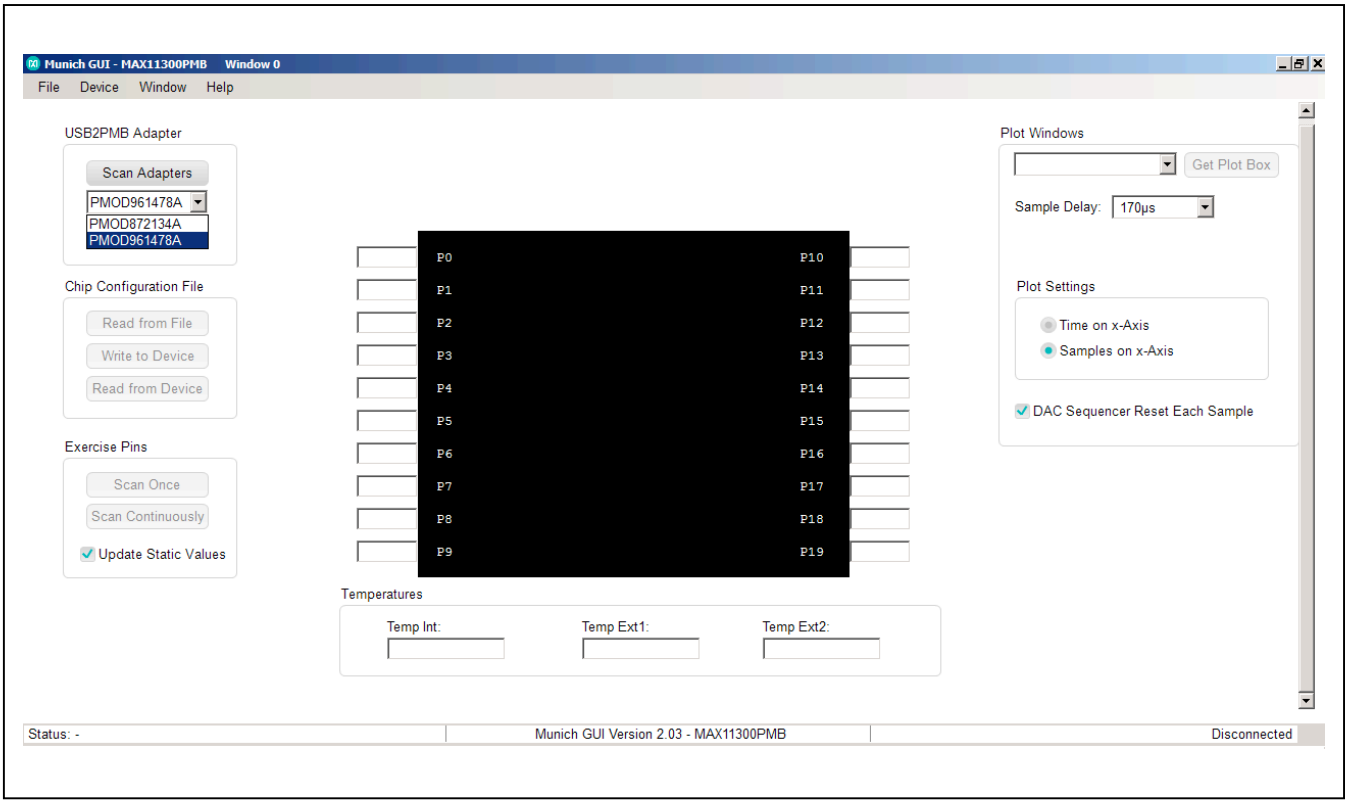

Figure 5. Munich GUI

Scan and Select

For instance, Figure 5 depicts the scanning and available Munich devices connected. The software has identified two devices:

a) PMOD872134A

b) PMOD961478A

Within the tab sheet, press the Connect button and verify that the button changes its text to Disconnect and the status bar at the bottom indicates that the companion board is connected. See Figure 6.

Connecting Multiple Boards

When connecting multiple boards such as Campbell and Cupertino at the same time to two separate Munich boards, perform Steps 1 to 3 for each device one after the other.

Figure 7 depicts Campbell and Cupertino being connected to two Munich adaptor boards at the same time.

Campbell GUI Tab

This environment contains the internal block diagram of the Campbell board and the following operations to perform:

- Sample Once and Sample Continuously
- Choose Sample Rate and Sample Count
- View Plots
- Average
- Calibrate
- Plot Configuration Options

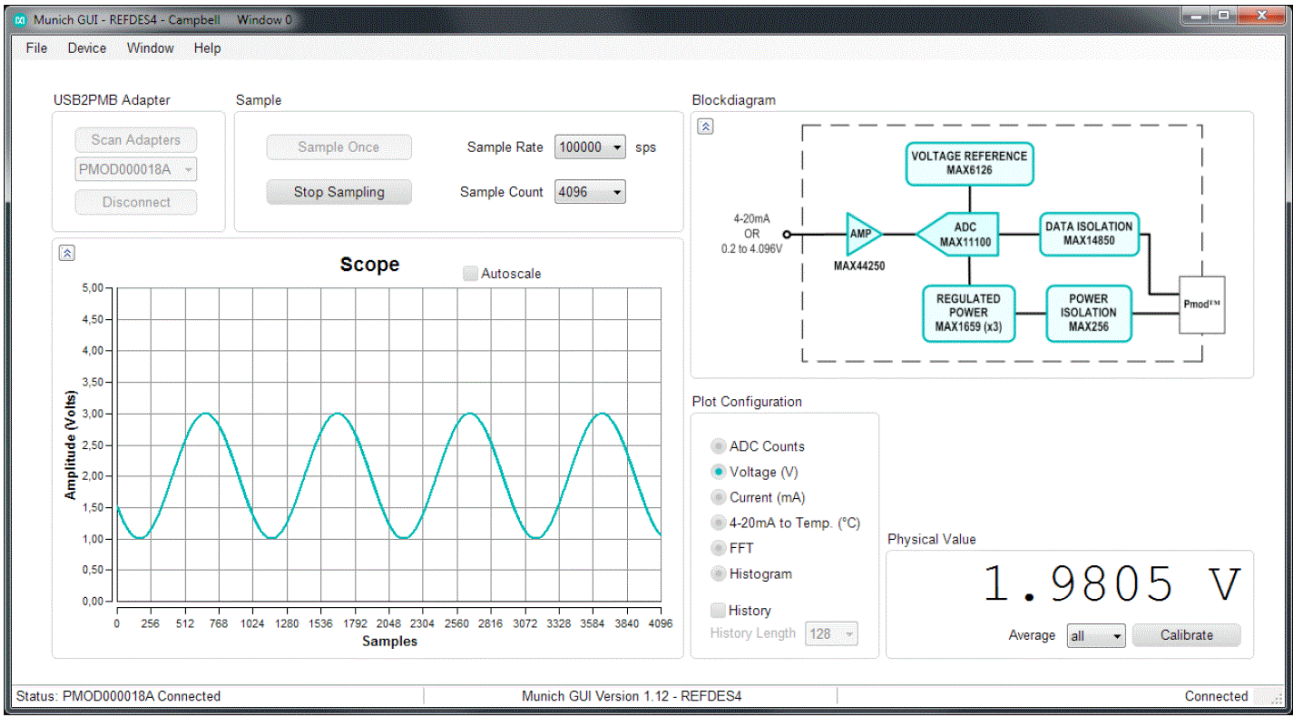

Figure 6. Campbell Connected to Munich GUI

Sampling (Figure 8):

1) **Sample Once:** This pushbutton tab allows discrete sampling.
2) **Sample Continuously:** This feature allows continuous sampling. Once the **Sample Continuously** button is clicked the button changes its text to **Stop Sampling** and the user would not be able to disconnect the board from the software until the user clicks the **Stop Sampling** button.
3) **Sample Rate:** This drop-down box option allows the user to choose the sample rate or the number of samples per second.
4) **Sample Count:** This drop-down box option allows the user to choose the number of samples to be sampled.

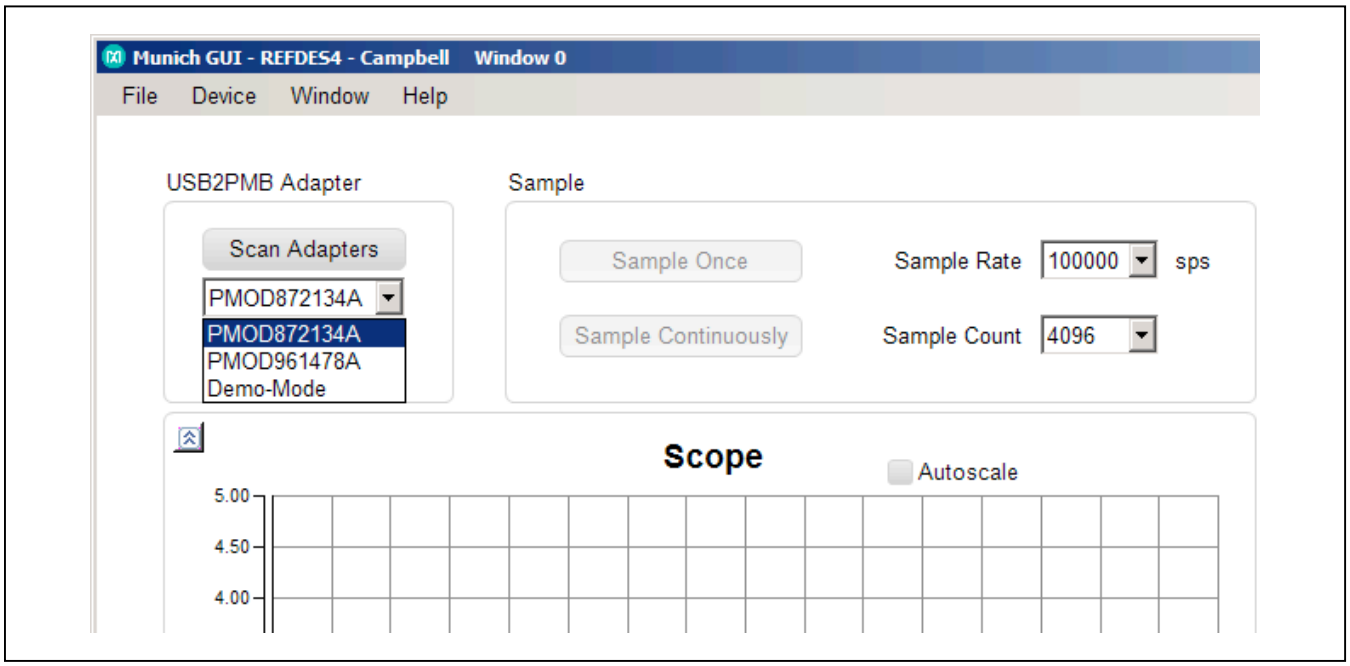

Figure 7. Campbell and Cupertino Connected to Two Munich Adapter Boards

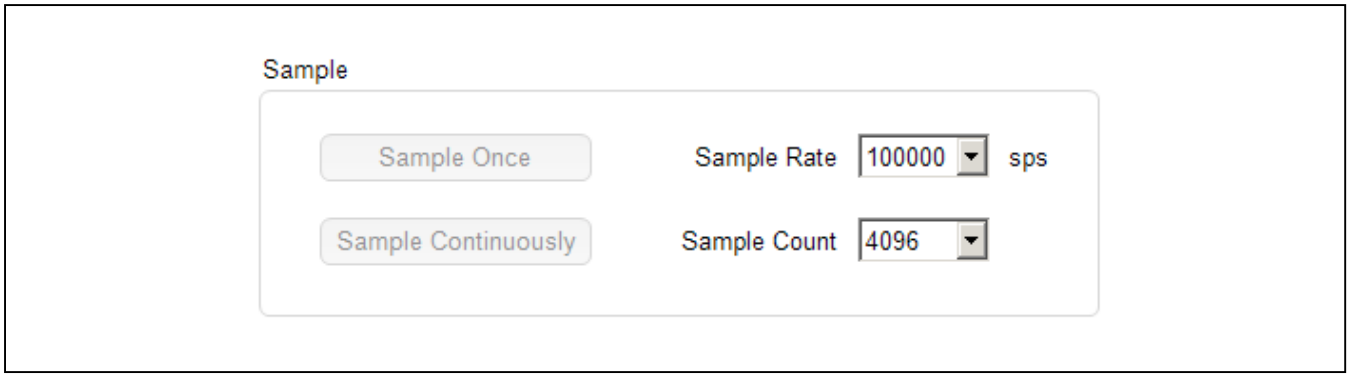

Figure 8. Sampling Options

5) **Real Time Scope:** The scope on the bottom left side of the GUI represents the measured data with number of samples in X-axis and Y-axis is selected from the available plot configurations options. Figure 9 depicts the options that determine the Y-axis in the scope.
   a) **Scope Options:** On the top right corner of the scope, plot settings options are available for the user to play/pause, zoom in/out, pan, print, save, and waveform settings.
   b) **Plot Configuration Options** (Figure 9a):
      i) **ADC Count:** This option plots the ADC count itself on the Y-axis with the number of samples on the X-axis.
      ii) **Voltage:** This option plots the converted voltage value.
      iii) **Current:** Plots the current measured across the 200Ω shunt resistor present in Campbell.
      iv) **4-20ma to Temp:** Plots the temperature measured from IFM TA3231 Temp-Sensor. This sensor sinks/ sources current proportional to the temperature measured. The shunt current and the temperature measured would be indicated the bottom of the GUI too.
      v) **FFT:** This option plots the FFT measurement on the Y-axis vs. frequency on the X-axis.
      vi) **Histogram:** This option allows user to view the resultant output in Histogram (Figure 10). The X-axis is ADC code and the Y-axis is the number occurrence.
   c) **History:** This option allows the user to view the history data by choosing the history length for viewing the data.
   d) **Average:** Drop-down box menu to choose to average of the discrete values sampled. For instance, if **16** is selected, it takes the first 16 samples of the sample-shot the user takes, then averages them and shows the number in the text box below. If history is selected as well, it adds this number as a datapoint to the history. If **all** is selected, it uses all the samples taken, as selected in **Sample Count** to build the average.

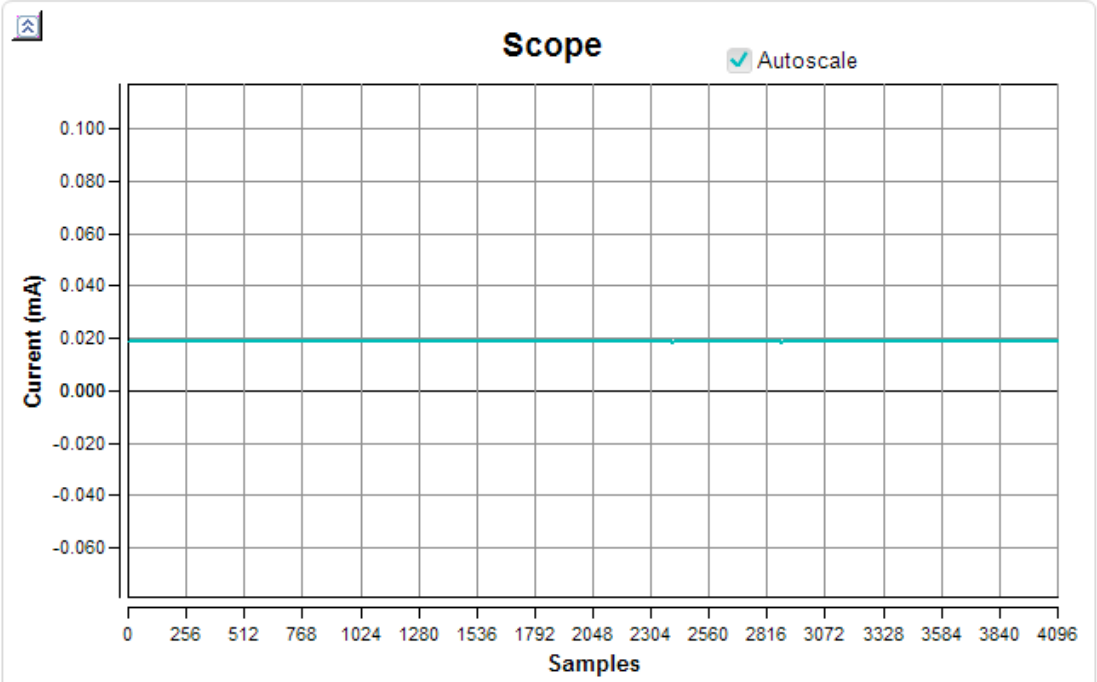

Figure 9. Real Time Scope GUI

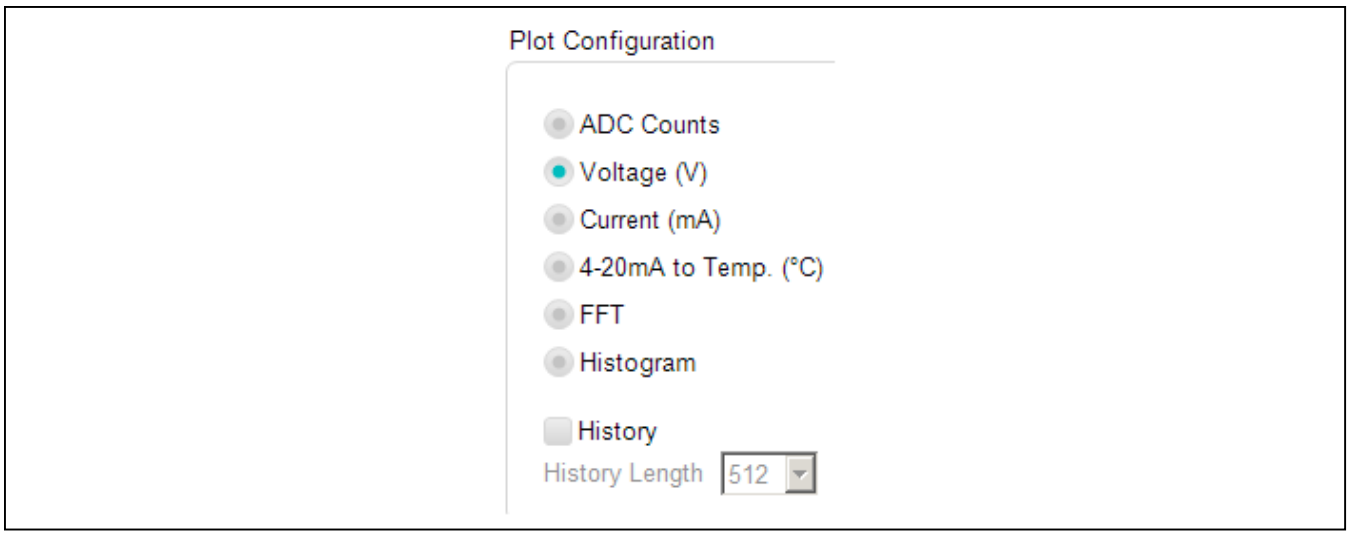

Figure 9a. Plot Configuration Options

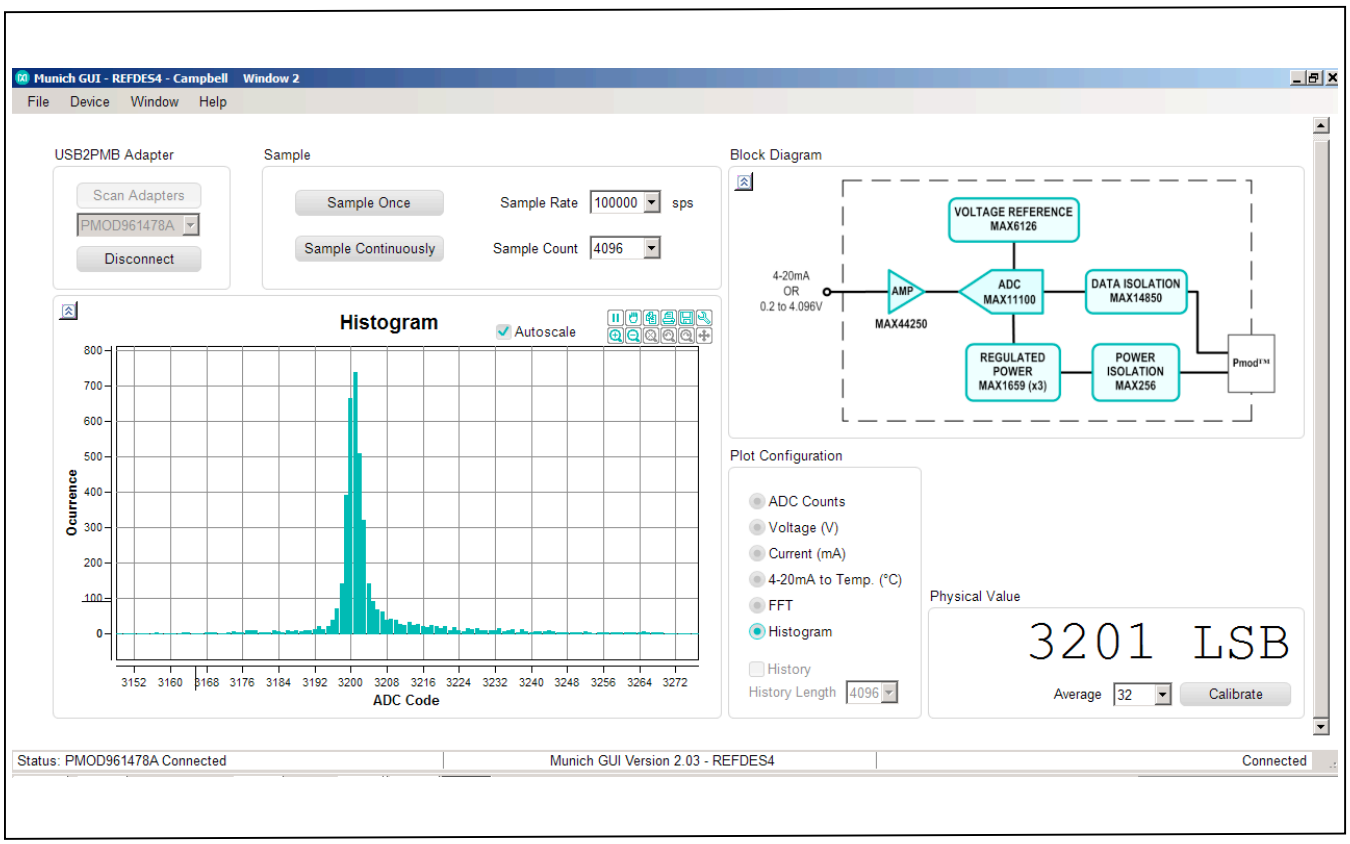

Figure 10. "Histogram" Display on Munich/Campbell GUI

e) **Calibrate:** If the user wishes to calibrate, this option enables a real-time calibration as shown in Figure 11.

i) **Shunt Resistor value:** This option allows entering the exact value of shunt resistance in Campbell board. This also allows the user to change the resistance and scale the current measured.

ii) **Offset:** The offset calibration is done by forcing a 0V input voltage or 0mA current to obtain the plot counts. This plot counts value if other than 0, should be fed in the offset digit tab.

iii) **Volt per LSB:** This option calibrates for gain error. The volt per code calibration is done by forcing approximately 80% of the specified input range (4.096V) at the input to obtain the code.

$$\text{Volt per LSB} = \frac{\text{Vin_Measured}}{2^{16} - 1}$$

If there is no gain error:

$$\text{Volt per LSB} = \frac{4.096}{2^{16} - 1} = 0.0000625 \text{ Volt/digit}$$

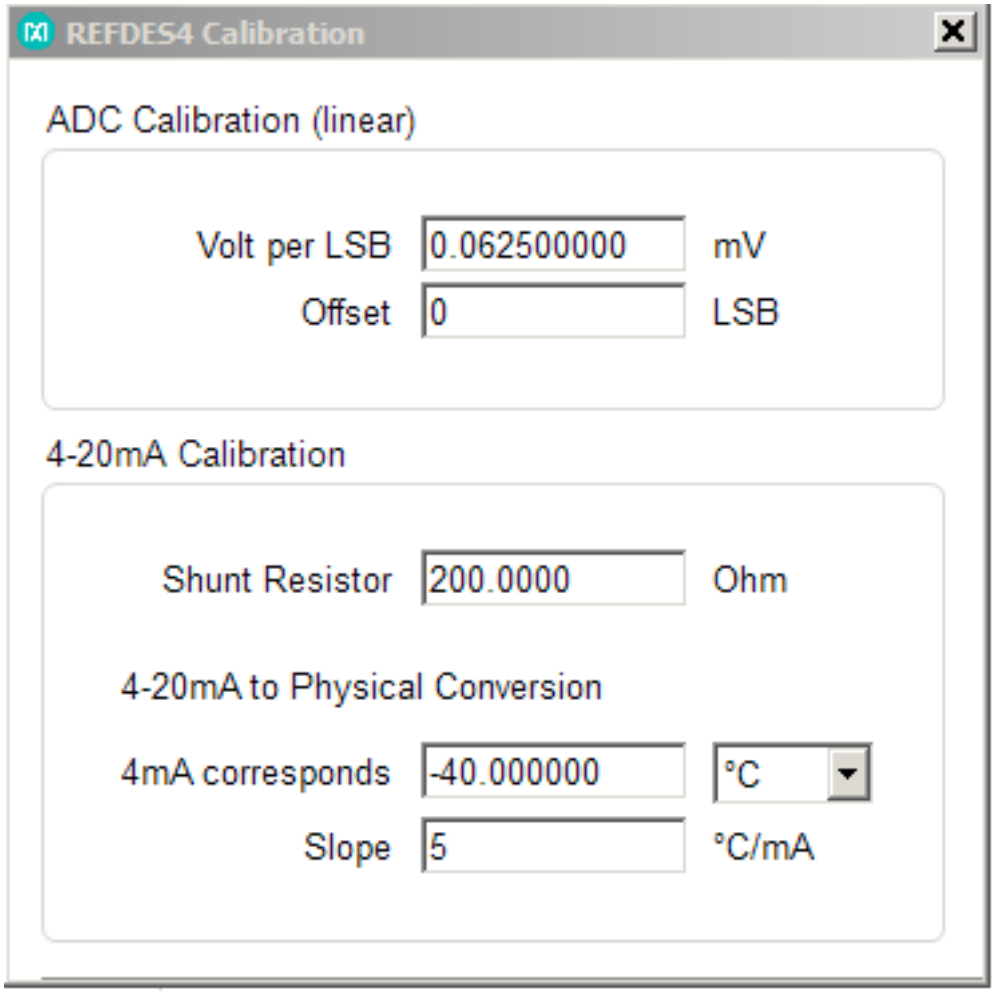

Figure 11. "Calibration" Display on Munich/Campbell GUI

Santa Fe GUI Tab

This environment is similar to the Campbell tab described. It consists of the internal block diagram of the Santa Fe board and the following operations to perform:

- Selecting Channel/Range
- Sample Once and Sample Continuously
- Average
- Choose Sampling Rate and Sample Count
- View Plots
- Calibrate
- Plot Configurations Options

1) **Selecting Channel/Range:** Refers to the block diagram present at the right side of the GUI, which describes four different channel input options. Checking the right input and right input range at the GUI translates the input channel and its data range at the board. Each channel input has seven different input range options for selection. See Figure 12.

2) **Sampling**

a) **Sample Once:** This pushbutton tab allows discrete sampling.

b) **Sample Continuously:** This feature allows continuous sampling. Once the Sample Continuously button is clicked the button changes its text to **Stop Sampling** and the user would not be able to disconnect the board from the software until the user clicks the **Stop Sampling** button.

c) **Sample Rate:** This drop-down box option allows the user to choose the sample rate or the number of samples per second.

d) **Sample Count:** This drop-down box option allows the user to choose the number of samples to be sampled.

3) **Real Time Scope:** The scope present on the left side of the GUI represents the measured data with number of samples in X-axis and Y-axis is selected from the available plot view options from the bottom of the GUI environment.

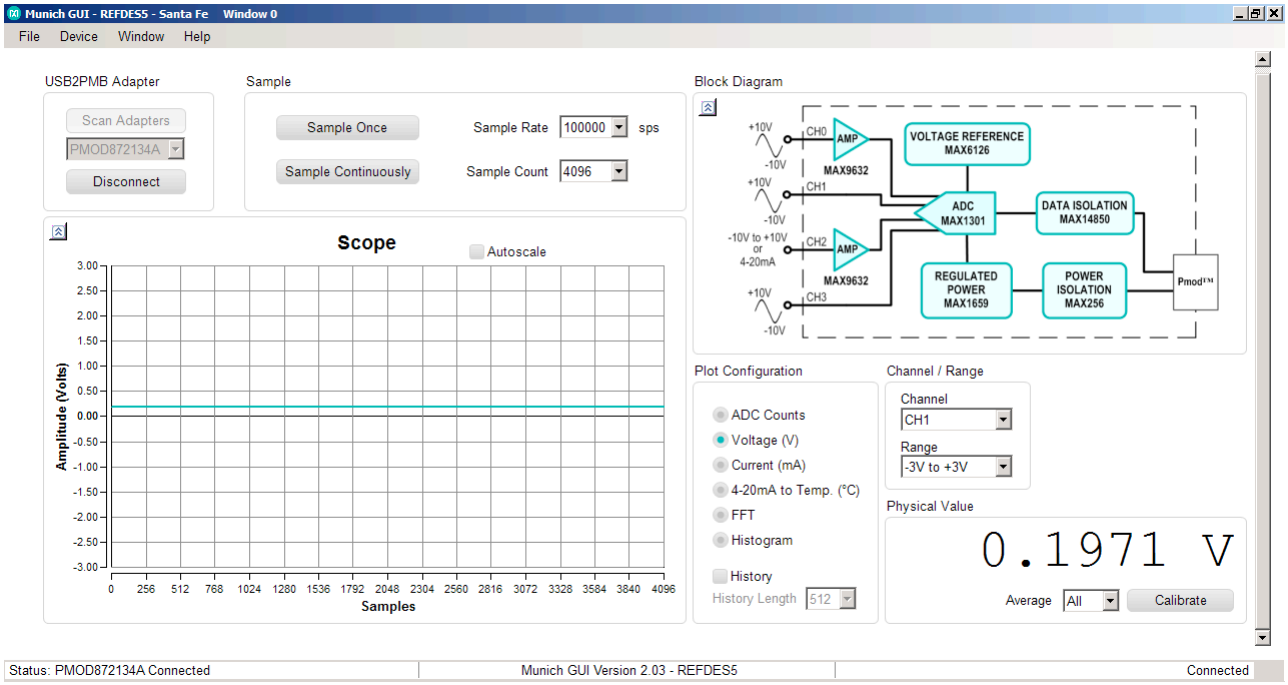

Figure 12. Munich/Santa Fe GUI

a) **Scope Options:** On top right corner of the scope or the Histogram plot, plot settings options are available for the user to play/pause, zoom in/out, pan, print, save, and waveform settings.

b) **Plot Configuration Options**

   i) **ADC Counts:** This option plots the ADC code itself on the Y-axis with the number of samples on the X-axis.

   ii) **Voltage:** This option plots the converted voltage value.

   iii) **Current:** Plots the current measured across the 250Ω shunt resistor present in Campbell.

   iv) **4-20mA to Temp:** Plots the temperature measured from IFM TA3231 temp sensor. This sensor sinks/ sources current proportional to the temperature measured. The shunt current and the temperature measured would also be indicated the bottom of the GUI.

   v) **FFT:** This option plots the FFT measurement on the Y-axis vs. frequency on the X-axis.

   vi) **Histogram:** This pushbutton option allows user to view the resultant output in Histogram. The X-axis is ADC code and the Y-axis is the number occurrence.

   vii) **History Length:** This option allows the user to view the history data by choosing the history length for viewing the data.

c) **Average:** Drop-down box menu to choose to average of the discrete values sampled. For instance, if **16** is selected, it takes the first 16 samples of the sample-shot the user takes, then averages them and shows the number in the text box below. If history is selected as well, it adds this number as a datapoint to the history. If **all** is selected, it uses all the samples taken, as selected in **No of Samples** to build the average.

d) **Calibrate:** If the user wishes to calibrate, this option enables a real-time calibration for each channel and each signal input range; hence, providing a robust calibration/measurements at each single physical channel and each input signal range. See Figure 13.

   i) **Shunt Resistor value:** This option allows entering the exact value of shunt resistance in Cupertino board. This also allows the user to change the resistance and scale the current measured

   ii) **Offset:** The offset calibration is done by forcing the minimum voltage at input (based on the selection of input range) to obtain the plot counts. This plot counts value, if other than 0, should be fed in the offset digit tab.

   iii) **Volt per LSB:** This option calibrates for gain error. The volt per code calibration is done by forcing approximately 80% of specified voltage at the input to obtain the code. Here there are seven different input ranges. Use appropriate range selection for calibration.

$$\text{Volt per LSB} = \frac{V_{\text{FullScale Input Range}}}{2^{16} - 1}$$

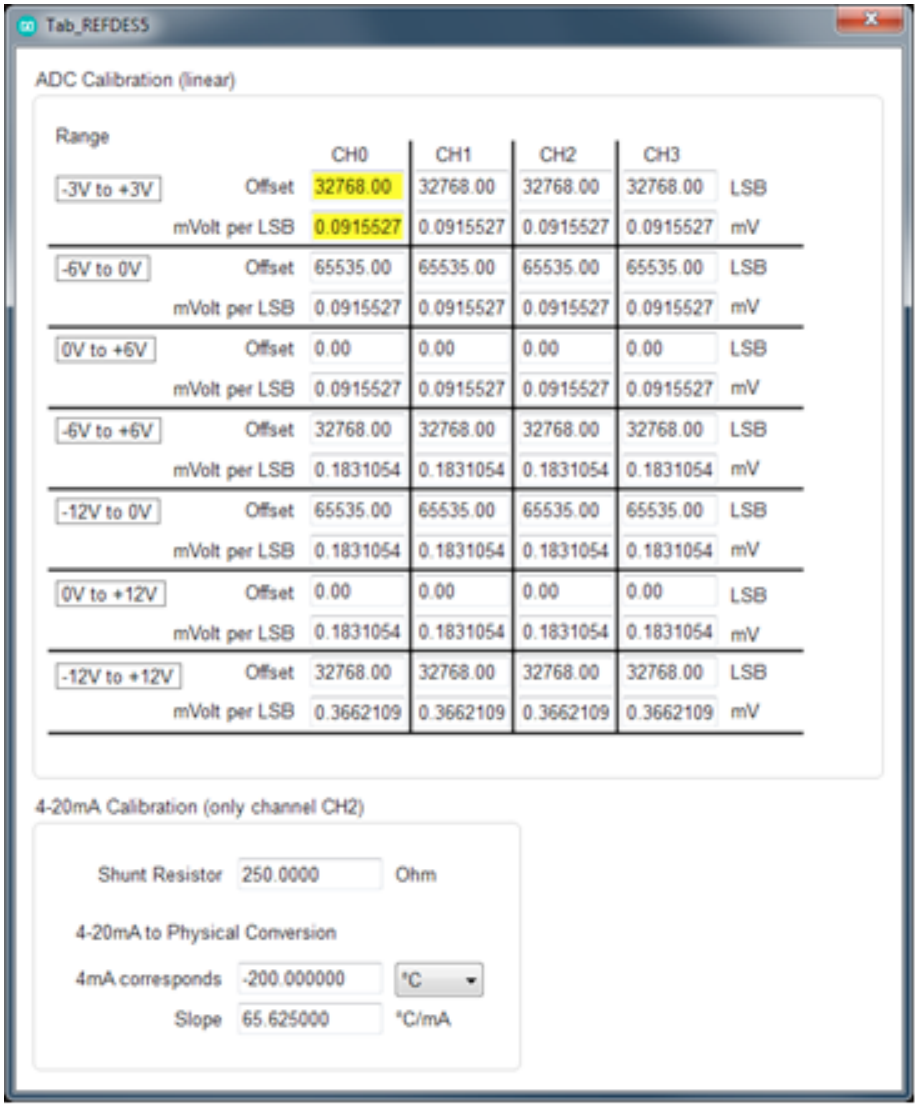

Range		CH0	CH1	CH2	CH3	
-3V to +3V	Offset	32768.00	32768.00	32768.00	32768.00	LSB
	mVolt per LSB	0.0915527	0.0915527	0.0915527	0.0915527	mV
-6V to 0V	Offset	65535.00	65535.00	65535.00	65535.00	LSB
	mVolt per LSB	0.0915527	0.0915527	0.0915527	0.0915527	mV
0V to +6V	Offset	0.00	0.00	0.00	0.00	LSB
	mVolt per LSB	0.0915527	0.0915527	0.0915527	0.0915527	mV
-6V to +6V	Offset	32768.00	32768.00	32768.00	32768.00	LSB
	mVolt per LSB	0.1831054	0.1831054	0.1831054	0.1831054	mV
-12V to 0V	Offset	65535.00	65535.00	65535.00	65535.00	LSB
	mVolt per LSB	0.1831054	0.1831054	0.1831054	0.1831054	mV
0V to +12V	Offset	0.00	0.00	0.00	0.00	LSB
	mVolt per LSB	0.1831054	0.1831054	0.1831054	0.1831054	mV
-12V to +12V	Offset	32768.00	32768.00	32768.00	32768.00	LSB
	mVolt per LSB	0.3662109	0.3662109	0.3662109	0.3662109	mV

Figure 13. "Calibration" Display on Munich/Cupertino GUI

Fresno GUI Tab

This environment consists of the internal block diagram of the Fresno board and the following operations to perform (Figure 14):

- Sample Once/Sample Continuously
- Average
- Sample Rate and Sample Count
- View Plots
- Calibrate
- Plot Configuration Options

1) Sampling

a) **Sample Once:** This pushbutton tab allows discrete sampling.

b) **Sample Continuously:** This feature allows continuous sampling. Once the **Sample Continuously** button is clicked the button changes its text to **Stop Sampling** and the user would not be able to disconnect the board from the software until the user clicks the **Stop Sampling** button.

c) **Sample Rate:** This drop-down box option allows the user to choose the sample rate or the number of samples per second.

d) **Sample Count:** This drop-down box option allows the user to choose the number of samples to be sampled.

e) **Average:** Drop-down box menu to choose to average of the discrete values sampled. For instance, if **16** is selected, it takes the first 16 samples of the sample-shot the user takes, then averages them and shows the number in the text box below. If history is selected as well, it adds this number as a datapoint to the history. If **all** is selected, it uses all the samples taken, as selected in **No. of Samples**, to build the average.

2) **Real Time Scope:** The scope present on the left side of the GUI represents the measured data with number of samples in X-axis and Y-axis is selected from the available plot view options from the bottom of the GUI environment.

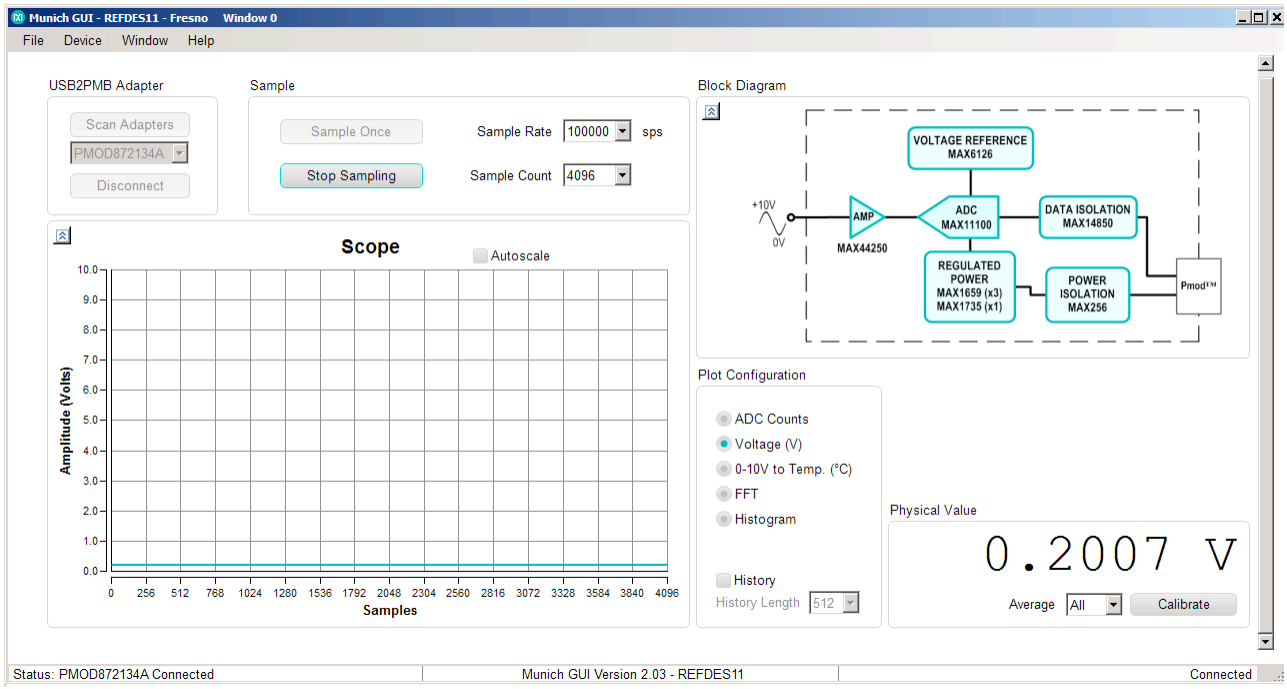

Figure 14. Munich/Fresno GUI

a) **Scope Options:** On the top right corner of the scope or the Histogram plot, plot settings options are available for the user to play/pause, zoom in/out, pan, print, save, and waveform settings.

b) **Plot Configuration Options**

i) **ADC Count:** This option plots the ADC code itself on the Y-axis with the number of samples on the X-axis.

ii) **Voltage:** This option plots the converted voltage value.

iii) **0 to 10V to Temp:** Plots the temperature measured from IFM TA3231 Temp-Sensor. This sensor sinks/sources current proportional to the temperature measured. The shunt current and the temperature measured would also be indicated at the bottom of the GUI.

iv) **FFT:** This option plots the FFT measurement on the Y-axis vs. frequency on the X-axis.

v) **Histogram:** This pushbutton option allows the user to view the resultant output in Histogram. The X-axis is ADC code and the Y-axis is the number occurrence.

vi) **History**

i) **History Length:** This option allows the user to view the history data by choosing the history length for viewing the data.

ii) **Show History of Average:** Checking this option allows the user to view entire data in history up to the history length chosen.

vii) **Calibrate:** If the user wishes to calibrate, this option enables a real-time calibration.

i) **Offset:** The offset calibration is done by forcing a 0V input voltage to obtain the plot counts. This plot counts value if other than 0, should be fed in the offset digit tab.

ii) **Volt per LSB:** This option calibrates for gain error. The volt per code calibration is done by forcing approximately 80% of the specified input range (+10V) at input to obtain the code.

$$\text{Volt per LSB} = \frac{\text{Vin_Measured}}{2^{16} - 1}$$

Corona GUI Tab

This environment consists of the internal block diagram of the Corona board and the remainder of the operations (Figure 15) to perform:

- Reading Section
- Display Section

1) **Reading Section**

a) **Read Once:** This pushbutton tab allows discrete sampling.

b) **Read continuously:** This feature allows continuous sampling. Once the **Read continuously** button is clicked the button changes its text to **Stop Reading** and the user would not be able to disconnect the board from the software until the user clicks the **Stop Sampling** button.

2) **Display Section**

a) **Result:** This displays the HEX value of the generated serial Data (B0:B15)

b) **B0 to B15:** This displays the individual Bit of serially generated Data

i) B0: RES: Reserved.

ii) B1: OT: Display status of internal temperature monitor.

iii) B2: UV: Display status of field supply voltage.

iv) B3 to B7: CRC: Internally calculated and generated cyclic redundancy check code.

v) B8 to B15: Serially generated data bits.

c) IN1 to IN8: Displays the input data applied.

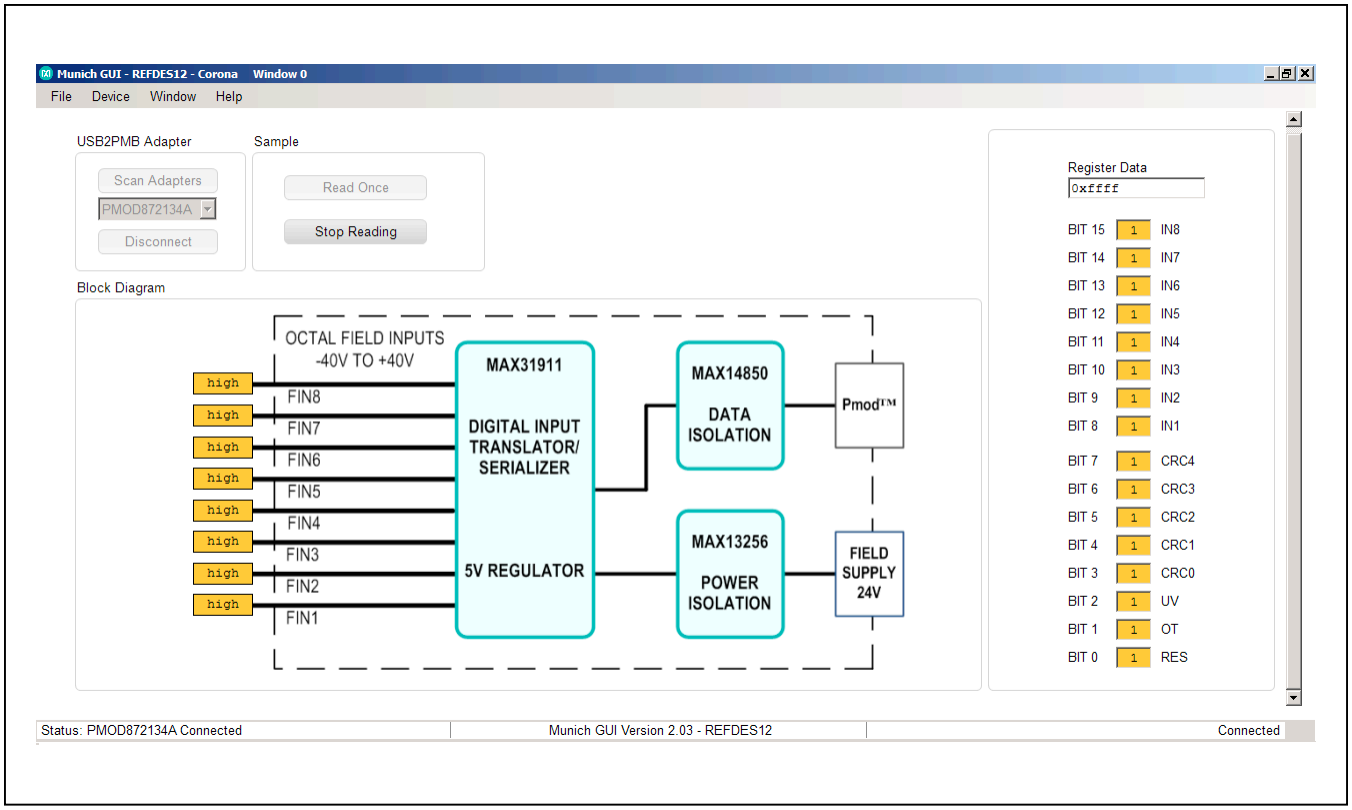

Figure 15. Munich/Corona GUI

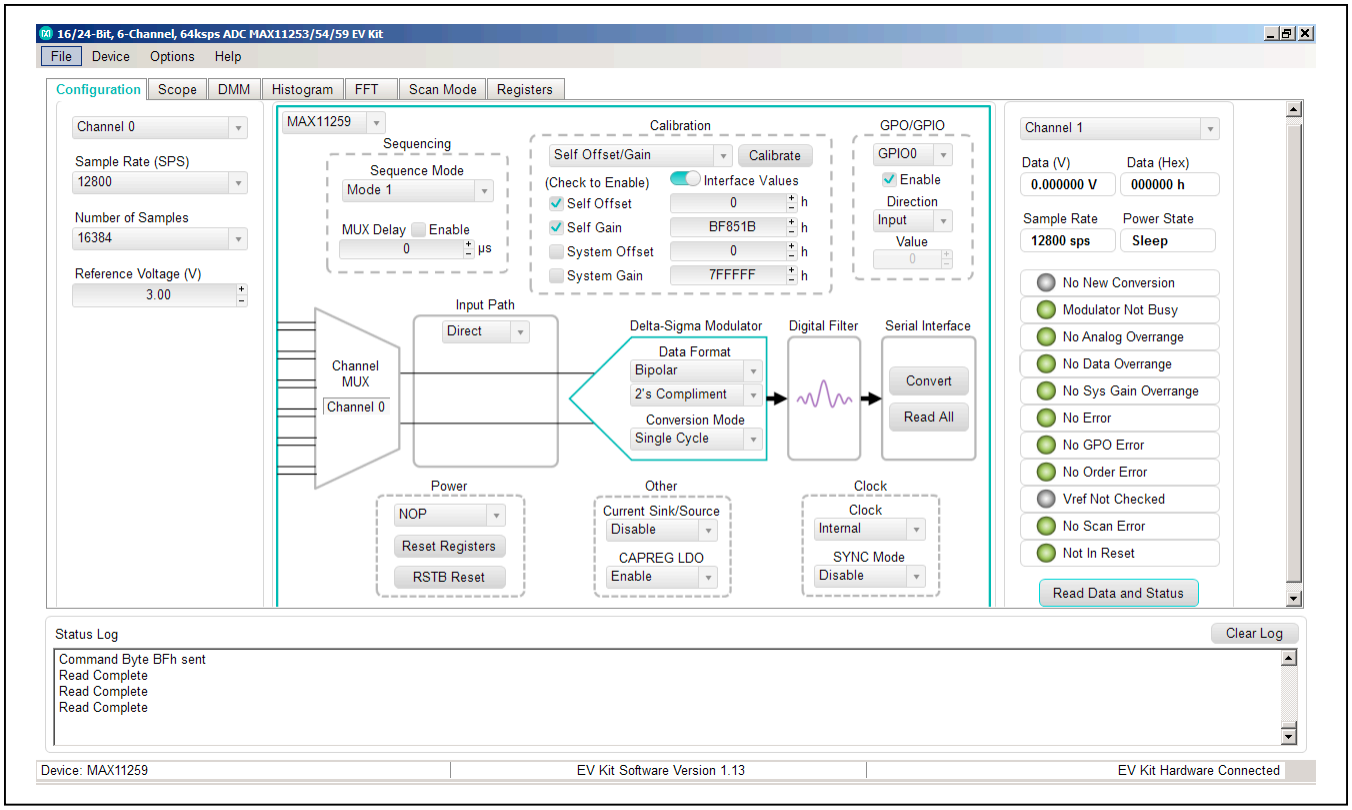

Figure 16. MAX11259PMB GUI

MAX11259PMB GUI

The USB2PMB2 adapter board can also be used to evaluate the performance of the MAX11259 24-bit, 6-channel, 64ksps integrated PGA delta-sigma ADC with I^{2}C interface. For detailed information, refer to the MAX11259PMB data sheet.

Ordering Information

PART	TYPE
USB2PMB2#	Adapter Board

#Denotes RoHS compliant.

For further details, refer to the *MAX11300PMB1 Peripheral Module and Munich (USB2PMB1) Adapter Board Quick Start Guide* at **www.maximintegrated.com**.

Revision History

REVISION NUMBER	REVISION DATE	DESCRIPTION	PAGES CHANGED
0	9/15	Initial release	—

For pricing, delivery, and ordering information, please contact Maxim Direct at 1-888-629-4642, or visit Maxim Integrated's website at www.maximintegrated.com.

Maxim Integrated cannot assume responsibility for use of any circuitry other than circuitry entirely embodied in a Maxim Integrated product. No circuit patent licenses are implied. Maxim Integrated reserves the right to change the circuitry and specifications without notice at any time.

Maxim Integrated and the Maxim Integrated logo are trademarks of Maxim Integrated Products, Inc. © 2015 Maxim Integrated Products, Inc.