TMP390 Ultra-Small, Dual-Channel, 0.5-µA, Resistor-Programmable Temperature Switch

1 Features

- Resistor programmable temperature trip points and hysteresis options
  - Resistor tolerances contribute zero error
  - Hysteresis options: 5°C, and 10°C
- Separate outputs for overtemperature or undertemperature detection
  - Channel A (overtemperature): +30 to +124°C, 2°C steps
  - Channel B (undertemperature): –50 to +25°C, 5°C steps
- Accuracy level options (maximum at −55°C to +130°C):
  - A2 Level: ±3.0°C (±1.5°C from 0°C to +70°C)
  - A3 Level: ±3.5°C (±2.0°C from 0°C to +70°C)
- Ultra-low power consumption: 0.5 µA typical at 25°C
- Operating temperature range: −55°C to +130°C
- Supply voltage: 1.62 to 5.5 V
- Open-drain outputs
- Trip test function enables in-system testing
- Available in an SOT-563 (1.60-mm × 1.20-mm), 6-pin package

2 Applications

- DC/AC inverter
- DC/DC converter
- Temperature transmitters
- Environmental control systems (ECS)
- Power tools
- Power banks
- Wireless infrastructure
  - WLAN/Wi-Fi access points
  - Core routers
  - Edge routers
  - Macro remote radio units (RRU)

3 Description

The TMP390 device is part of a family of ultra-low power, dual channel, resistor programmable temperature switches that enable protection and detection of system thermal events from –50°C to 130°C. The TMP390 offers independent overtemperature (hot) and undertemperature (cold) detection. The trip temperatures (T_{TRIP}) and thermal hysteresis (T_{HYST}) options are programmed by two E96-series (1%) standard decade value resistors on the SETA and SETB pins. Each resistor can range from 1.05 KΩ to 909 KΩ, representing one of 48 unique values.

The values of the resistor to ground on SETA input sets the T_{TRIP} threshold of Channel A. The value of the resistor to ground on SETB input sets the T_{TRIP} threshold of Channel B, as well as the T_{HYST} options of 5°C, or 10°C for both channels, to prevent undesired digital output switching. Resistors accuracy has no impact to T_{TRIP} accuracy.

To enable customer board-level manufacturing, the TMP390 supports a trip test function where the digital outputs are activated by exercising the SETA or SETB pin.

Device Information(1)

PART NUMBER	PACKAGE	BODY SIZE (NOM)
TMP390,	SOT-563 (6)	1.60 mm × 1.20 mm

(1) For all available packages, see the orderable addendum at the end of the data sheet.

Device Comparison

PART NUMBER	FUNCTION	OUTPUT TYPE
TMP390	Hot / Cold	Open-Drain

Simplified Schematic

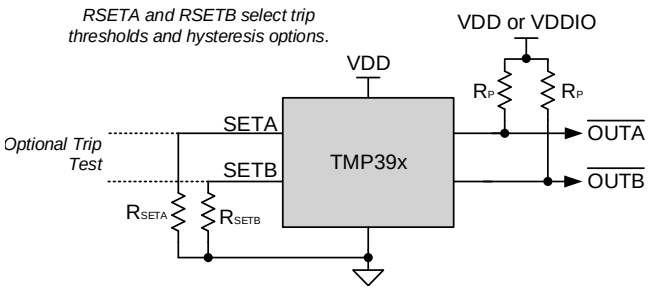

An IMPORTANT NOTICE at the end of this data sheet addresses availability, warranty, changes, use in safety-critical applications, intellectual property matters and other important disclaimers. PRODUCTION DATA.

Table of Contents

1 Features ... 1
2 Applications ... 1
3 Description ... 1
4 Revision History ... 2
5 Pin Configuration and Functions ... 3
6 Specifications ... 4
6.1 Absolute Maximum Ratings ... 4
6.2 ESD Ratings ... 4
6.3 Recommended Operating Conditions ... 4
6.4 Thermal Information ... 4
6.5 Electrical Characteristics ... 5
6.6 Typical Characteristics ... 7
7 Detailed Description ... 8
7.1 Overview ... 8
7.2 Functional Block Diagram ... 8
7.3 Feature Description ... 8
7.4 Device Functional Modes ... 11
8 Application and Implementation ... 12
8.1 Applications Information ... 12
8.2 Typical Applications ... 12
9 Power Supply Recommendations ... 19
10 Layout ... 19
10.1 Layout Guidelines ... 19
10.2 Layout Example ... 19
11 Device and Documentation Support ... 20
11.1 Receiving Notification of Documentation Updates 20
11.2 Community Resources ... 20
11.3 Trademarks ... 20
11.4 Electrostatic Discharge Caution ... 20
11.5 Glossary ... 20
12 Mechanical, Packaging, and Orderable Information ... 20

4 Revision History

NOTE: Page numbers for previous revisions may differ from page numbers in the current version.

DATE	REVISION	NOTES
May 2019	*	Initial release.

Copyright © 2019, Texas Instruments Incorporated

5 Pin Configuration and Functions

DRL Package
6-Pin SOT-563
Top View

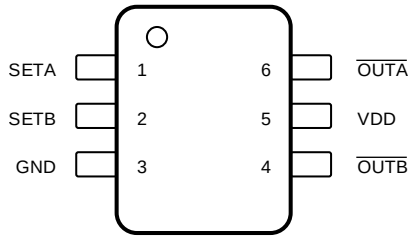

Not to scale

Pin Functions

PIN		I/O	DESCRIPTION
NO.	NAME		
1	SETA	Input	Channel A temperature set point. Connect a standard E96, 1% resistance between SETA and GND.
2	SETB	Input	Channel B temperature and Hysteresis set point. Connect a standard E96, 1% resistance between SETB and GND.
3	GND	Ground	Device ground.
4	$\overline{\text{OUTB}}$	Logic Output	Channel B logic open-drain active low output. If unused, the output can be left floating or connected to GND.
5	VDD	Supply	Power supply voltage (1.62 V – 5.5 V).
6	$\overline{\text{OUTA}}$	Logic Output	Channel A logic open-drain active low output. If unused, the output can be left floating or connected to GND.

6 Specifications

6.1 Absolute Maximum Ratings

over operating free-air temperature range (unless otherwise noted)[(1)(2)]

		MIN	MAX	UNIT
Supply voltage	VDD	–0.3	6	V
Voltage at	$\overline{OUTA}$, $\overline{OUTB}$	-0.3	6	V
Voltage at	SETA, SETB	–0.3	VDD + 0.3	V
Operating junction temperature, T_J		–55	155	°C
Storage temperature, T_{stg}		–60	155	°C

(1) Stresses beyond those listed under *Absolute Maximum Ratings* may cause permanent damage to the device. These are stress ratings only, which do not imply functional operation of the device at these or any other conditions beyond those indicated under *Recommended Operating Conditions*. Exposure to absolute-maximum-rated conditions for extended periods may affect device reliability.
(2) Powering the device when the operating junction temperature is outside the *Recommended Operating Conditions*, may affect the functional operation of the device. The device must be power cycled after the system has returned to conditions as indicated under *Recommended Operating Conditions*.

6.2 ESD Ratings

			VALUE	UNIT
$V_{(ESD)}$	Electrostatic discharge	Human-body model (HBM), per ANSI/ESDA/JEDEC JS-001[(1)]	±2000	V
		Charged-device model (CDM), per JEDEC specification JESD22-C101[(2)]	±500	

(1) JEDEC document JEP155 states that 500-V HBM allows safe manufacturing with a standard ESD control process.
(2) JEDEC document JEP157 states that 250-V CDM allows safe manufacturing with a standard ESD control process.

6.3 Recommended Operating Conditions

		MIN	NOM	MAX	UNIT
VDD	Supply voltage	1.62	3.3	5.5	V
V_{OUTA}	Channel A output pull-up voltage (open-drain)			VDD + 0.3	V
V_{OUTB}	Channel B output pull-up voltage (open-drain)			VDD + 0.3	V
I_{SETA}	SETA pin circuit leakage current	-20		20	nA
I_{SETB}	SETB pin circuit leakage current	-20		20	nA
R_{PA}	Pullup resistor connected from $\overline{OUTA}$ to VDDIO[(1)]	1	10		kΩ
R_{PB}	Pullup resistor connected from $\overline{OUTB}$ to VDDIO[(1)]				
T_A	Operating free-air temperature (specified performance)	–55		130	°C
	Operating free-air temperature (functional, unspecified performance)	–55		150	°C

(1) Where VDDIO is an independent power supply other than VDD, and shall not exceed (VDD + 0.3) V.

6.4 Thermal Information

THERMAL METRIC[(1)]		TMP390 DRL (SOT) 6 PINS	UNIT
$R_{\theta JA}$	Junction-to-ambient thermal resistance	210.3	°C/W
$R_{\theta JC(top)}$	Junction-to-case (top) thermal resistance	105	°C/W
$R_{\theta JB}$	Junction-to-board thermal resistance	87.5	°C/W
ψ_{JT}	Junction-to-top characterization parameter	6.1	°C/W
ψ_{JB}	Junction-to-board characterization parameter	87	°C/W

(1) For more information about traditional and new thermal metrics, see the *Semiconductor IC Package Thermal Metrics* application report, (SPRA953).

Copyright © 2019, Texas Instruments Incorporated

6.5 Electrical Characteristics

Minimum and maximum specifications are over -55°C to 130°C and VDD = 1.62V - 5.5V (unless otherwise noted); typical specifications are at T_A = 25°C and VDD = 3.3 V.

PARAMETER		TEST CONDITIONS		MIN	TYP	MAX	UNIT
TEMPERATURE TO DIGITAL CONVERTER							
TEMPERATURE MEASUREMENT							
	Trip Point Accuracy	TMP390A2	0°C to 70°C, VDD = 2.5V to 5.5V	-1.5	±0.5	1.5	°C
			0°C to 70°C, VDD = 1.62V to 2.5V	-2.0	±0.5	2.0	
			-55°C to 130°C, VDD = 2.5V to 5.5V	-2.5	±0.5	2.5	
			-55°C to 130°C, VDD = 1.62V to 2.5V	-3.0	±0.5	3.0	
		TMP390A3	0°C to 70°C	-2.0	±0.5	2.0	°C
			-55°C to130°C	-3.5		3.5	°C
T_{HYST}	Trip point hysteresis	Table 2 selection column 2			5		°C
		Table 2 selection column 3			10		°C
TRIP POINT RESISTOR PROGRAMMING							
	SETA & SETB resistor range			1.05		909	kΩ
	SETA & SETB resistor tolerance	T_A=25°C		-1.0		1.0	%
	SETA & SETB resistor temperature coefficient			-100		100	ppm/°C
	SETA & SETB resistor lifetime drift			-0.2		0.2	%
DIGITAL INPUT/OUTPUT							
C_{IN}	Input capacitance for SETA & SETB (includes PCB)					50	pF
R_{PD}	Internal Pull down resistance	SETA & SETB			100		kΩ
V_{OL}	Output logic low level	I_{OL} = -3 mA		0		0.4	V
I_{LKG}	Leakage current on output high level			-0.1		0.1	µA
T_{Cov}	Conversion duration				0.65		ms
T_S	Sampling period				0.5		s
POWER SUPPLY							
I_Q	Average Quiescent current				0.5	1	µA
$I_{Standby}$	Standby current				0.2		
I_{Conv}	Conversion current				135		µA
I_{SU}	Startup (Reset) peak current	Reset Time interval only.			250		µA
V_{POR}	Power-on-reset threshold voltage	Supply going up			1.55		V

Electrical Characteristics (continued)

Minimum and maximum specifications are over -55°C to 130°C and VDD = 1.62V - 5.5V (unless otherwise noted); typical specifications are at T_A = 25°C and VDD = 3.3 V.

PARAMETER		TEST CONDITIONS	MIN	TYP	MAX	UNIT
	Brownout detect	Supply going down		1.1		V
	Power Reset Time	Time required by device to reset after power up		10		ms

Copyright © 2019, Texas Instruments Incorporated

6.6 Typical Characteristics

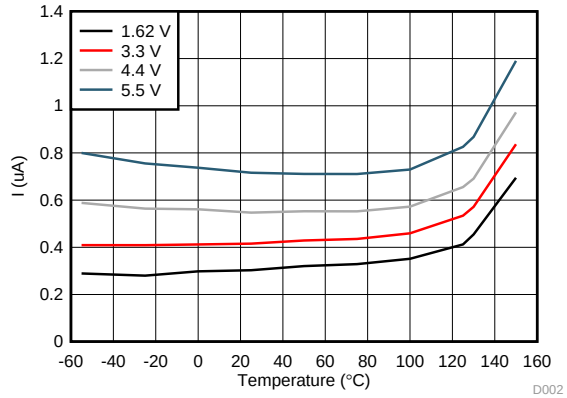

(V_S = 1.62 V, 3.3 V, 4.4 V, 5.5 V)

Figure 1. Average Supply Current vs Operating Temperature

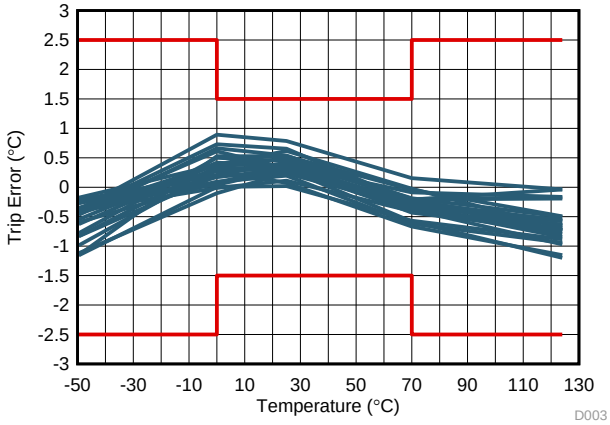

(V_S = 3.3 V)

Figure 2. Trip Point Accuracy vs Operating Temperature

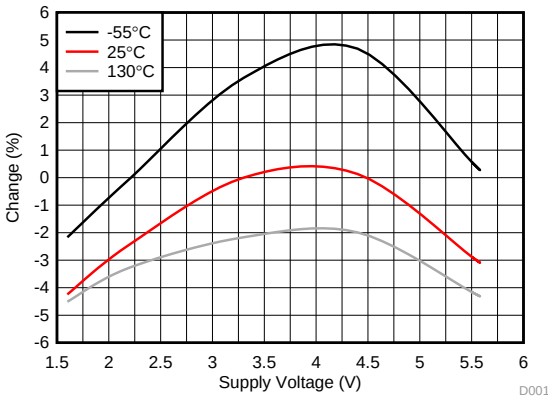

Figure 3. Sampling Period Variation vs Supply Voltage

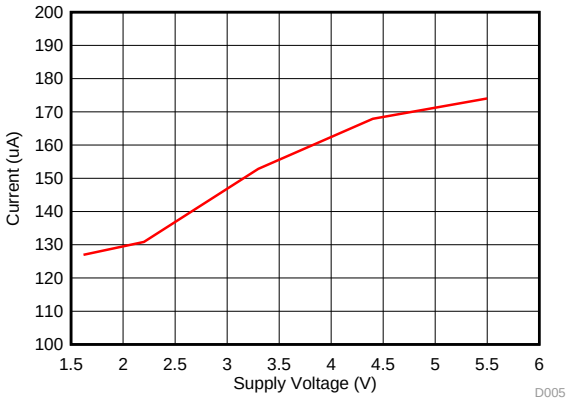

Figure 4. Conversion Current vs Operating Temperature

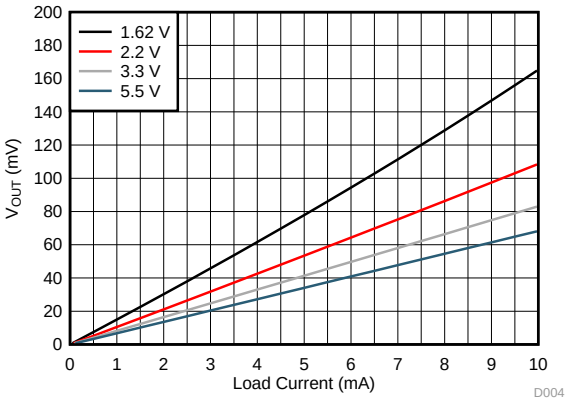

(T_{AMB} = 25°C)

Figure 5. Output Voltage vs Load Current

7 Detailed Description

7.1 Overview

The TMP390 ultra-low power, dual channel, resistor programmable temperature switches enable detection and protection of system thermal events over a wide temperature range. The TMP390 offers independent overtemperature (hot) and undertemperature (cold) detection. The trip temperatures and hysteresis options are programmed by two E96-series (1%) standard decade value resistors on the SETA and SETB pins. The TMP390 can enable a customer board-level manufacturing test through the trip test function that can force the SETA or SETB pins to logic high to activates the digital outputs.

7.2 Functional Block Diagram

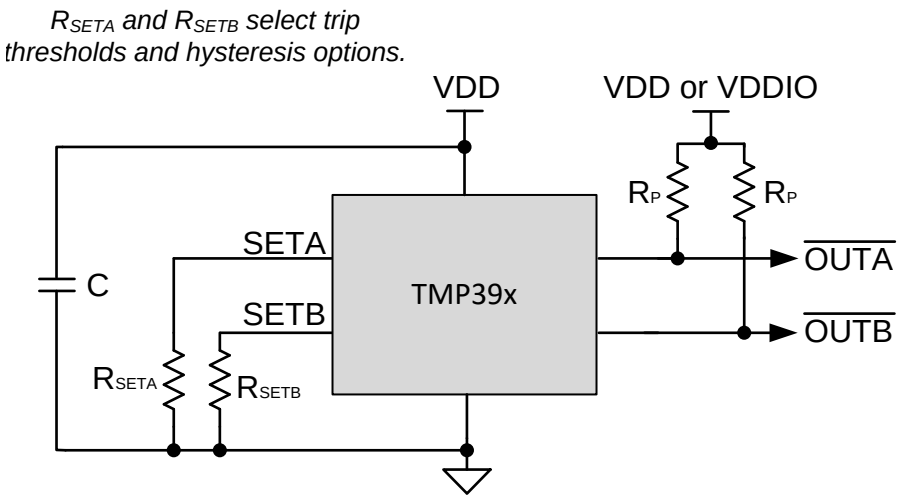

Figure 6. Simplified Schematic

7.3 Feature Description

The TMP390 requires two resistors to set the two trip points and hysteresis, according to Table 1 and Table 2, for the hot and cold channel device. The output of the TMP390 is open-drain and requires two pullup resistors. TI recommends to use a pullup voltage supply that does not exceed VDD + 0.3 V. The pullup resistors used in between the $\overline{OUTA}$ and $\overline{OUTB}$ pins and the pullup supply should be greater than 1 kΩ. The device powers on when the supply voltage goes beyond 1.5 V, and starts sampling the input resistors to set the two trip points and hysteresis value after power-on. These values will remain the same until the device goes through a power cycle. After the device sets the trip points and hysteresis level, the device will update the output every half a second. The conversion time is typically 0.65 ms when the temperature is checked against the trip points and the outputs are updated. The device remains in standby mode between conversions. If either channel is not used, the output can be grounded or left floating.

7.3.1 TMP390 Programming Tables

The temperature threshold and hysteresis options for the TMP390 device are programmed using two external 1% E96 standard resistors. The specific resistor value to ground on the SETA input sets the temperature threshold of channel A. The specific resistor value to ground on the SETB input sets the temperature threshold of channel B, as well as the hysteresis for both channel A and channel B.

Table 1. TMP390 Channel A Threshold Setting

CHANNEL A (HOT) TRIP TEMPERATURE (°C)	CHANNEL A NOMINAL 1% RESISTORS (KΩ)	CHANNEL A (HOT) TRIP RESET TEMPERATURE (°C) FOR HYSTERESIS = 5°C	CHANNEL A (HOT) TRIP RESET TEMPERATURE (°C) FOR HYSTERESIS = 10°C
30	1.05	25	20
32	1.21	27	22

Copyright © 2019, Texas Instruments Incorporated

Feature Description (continued)

Table 1. TMP390 Channel A Threshold Setting (continued)

CHANNEL A (HOT) TRIP TEMPERATURE (°C)	CHANNEL A NOMINAL 1% RESISTORS (KΩ)	CHANNEL A (HOT) TRIP RESET TEMPERATURE (°C) FOR HYSTERESIS = 5°C	CHANNEL A (HOT) TRIP RESET TEMPERATURE (°C) FOR HYSTERESIS = 10°C
34	1.40	29	24
36	1.62	31	26
38	1.87	33	28
40	2.15	35	30
42	2.49	37	32
44	2.87	39	34
46	3.32	41	36
48	3.83	43	38
50	4.42	45	40
52	5.11	47	42
54	5.90	49	44
56	6.81	51	46
58	7.87	53	48
60	9.09	55	50
62	10.5	57	52
64	12.1	59	54
66	14.0	61	56
68	16.2	63	58
70	18.7	65	60
72	21.5	67	62
74	24.9	69	64
76	28.7	71	66
78	33.2	73	68
80	38.3	75	70
82	44.2	77	72
84	51.1	79	74
86	59.0	81	76
88	68.1	83	78
90	78.7	85	80
92	90.9	87	82
94	105	89	84
96	121	91	86
98	140	93	88
100	162	95	90
102	187	97	92
104	215	99	94
106	249	101	96
108	287	103	98
110	332	105	100
112	383	107	102
114	442	109	104
116	511	111	106
118	590	113	108
120	681	115	110

Copyright © 2019, Texas Instruments Incorporated

Feature Description (continued)

Table 1. TMP390 Channel A Threshold Setting (continued)

CHANNEL A (HOT) TRIP TEMPERATURE (°C)	CHANNEL A NOMINAL 1% RESISTORS (KΩ)	CHANNEL A (HOT) TRIP RESET TEMPERATURE (°C) FOR HYSTERESIS = 5°C	CHANNEL A (HOT) TRIP RESET TEMPERATURE (°C) FOR HYSTERESIS = 10°C
122	787	117	112
124	909	119	114

Table 2. TMP390 Channel B Threshold and Hysteresis Setting

CHANNEL B (COLD) TRIP TEMPERATURE (°C)	CHANNEL B NOMINAL 1% RESISTORS (KΩ)		CHANNEL B (COLD) TRIP RESET TEMPERATURE (°C)	
	HYSTERESIS = 5°C	HYSTERESIS = 10°C	HYSTERESIS = 5°C	HYSTERESIS = 10°C
–50	90.9	105	–45	–40
–45	78.7	121	–40	–35
–40	68.1	140	–35	–30
–35	59.0	162	–30	–25
–30	51.1	187	–25	–20
–25	44.2	215	–20	–15
–20	38.3	249	–15	–10
–15	33.2	287	–10	–5
–10	28.7	332	–5	0
–5	24.9	383	0	5
0	21.5	442	5	10
5	18.7	511	10	15
10	16.2	590	15	20
15	14.0	681	20	25
20	12.1	787	25	30
25	10.5	909	30	35

7.3.2 Trip Test

The purpose of the trip test is in system manufacturing test without putting the TMP390 through costly temperature verification of the assembly of TMP390 and pullup resistors. When the SETA or SETB pin is set to a high logic level, the associated output goes low. When the input pin level goes low, the output goes to its previous condition before the trip test. The trip test does not affect the current condition of the device. The trip test signals should stay above 0.8 × VDD for logic high and below 0.2 × VDD for logic low.

The trip test operation is shown in Figure 7. The trip test must be performed with a single toggle when the device is operating at a temperature that will not cause the corresponding output to trip. The trip test is intended for production testing after assembly, and must not be used as a functional feature.

Copyright © 2019, Texas Instruments Incorporated

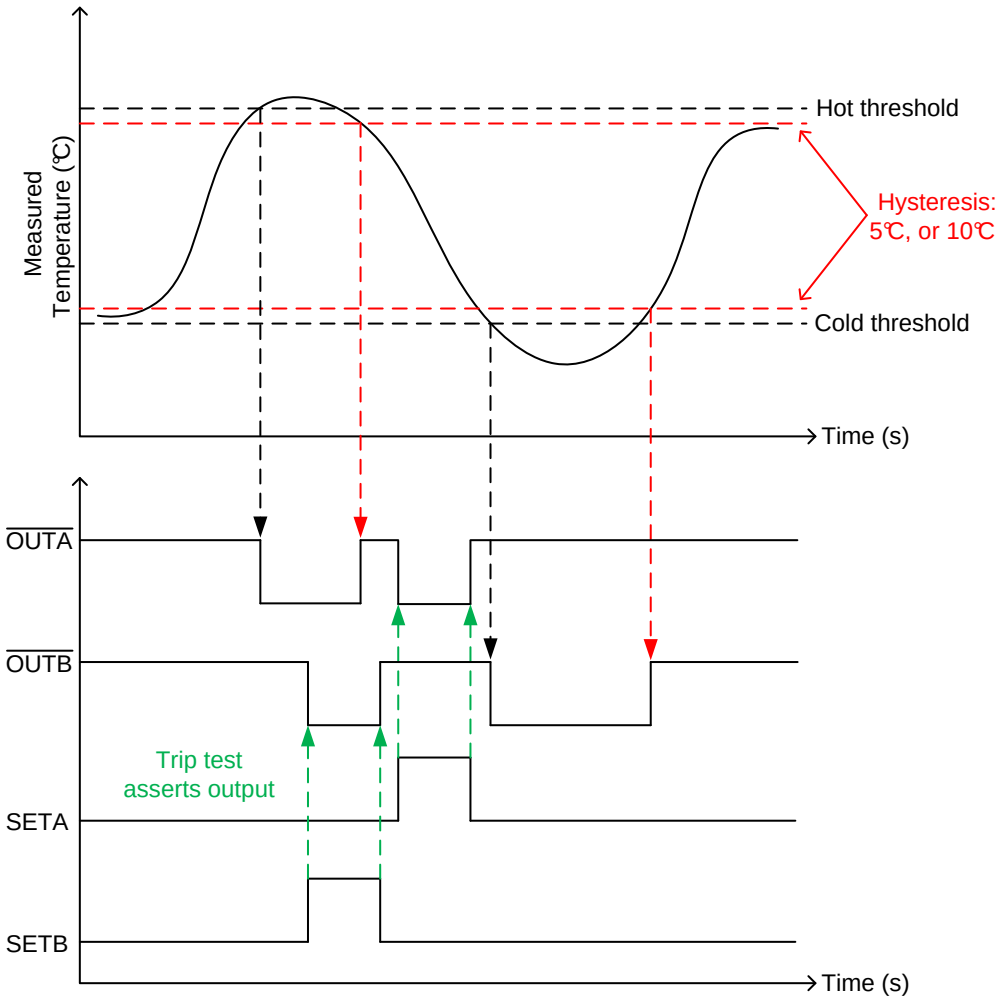

Figure 7. TMP390 Trip Test Operation

7.4 Device Functional Modes

The device has one mode of operation that applies when operated within the *Recommended Operating Conditions*. The temperature threshold for $\overline{\text{OUTA}}$ and $\overline{\text{OUTB}}$ pins is configured by the resistors on the SETA and SETB pins. The hysteresis is configured by the value of the resistor on the SETB pin.

8 Application and Implementation

NOTE

Information in the following applications sections is not part of the TI component specification, and TI does not warrant its accuracy or completeness. TI's customers are responsible for determining suitability of components for their purposes. Customers should validate and test their design implementation to confirm system functionality.

8.1 Applications Information

The TMP390 device is part of a family of ultra-low power, dual channel, resistor programmable temperature switches that can enable detection and protection of system thermal events over a wide temperature range. The trip temperatures (T_{TRIP}) and hysteresis options are programmed by two E96-series (1%) standard decade value resistors on the SETA and SETB pins. The thermal hysteresis (T_{HYST}) options of 5°C or 10°C are resistor-programmed to prevent undesired digital output switching.

8.2 Typical Applications

8.2.1 Simplified Application Schematic

Figure 8 shows the simplified schematic where R_{SETA} and R_{SETB} are used to set channel A trip point (SETA) and channel B trip point and hysteresis for both channels (SETB). SETA and SETB can be programmed at a variety of temperatures based on the device, as described in Table 1 for channel A trip point, and Table 2 or for channel B trip point and hysteresis for both channels. $\overline{OUTA}$ and $\overline{OUTB}$ outputs correspond to the temperature threshold detection at SETA and SETB, respectively.

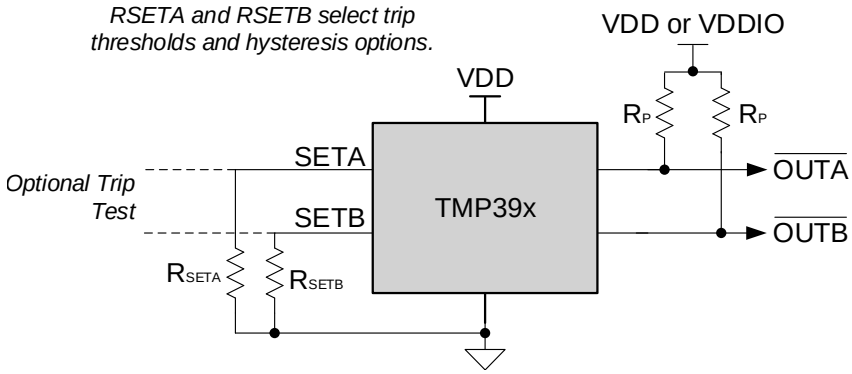

Figure 8. Simplified Schematic

8.2.1.1 Design Requirements

The TMP390 requires two resistors to set the high and low trip points and hysteresis, and two pullup resistors for the open-drain device. TI also highly recommended to place a 0.1-µF, power-supply bypassing capacitor close to the VDD supply pin. To minimize the internal power dissipation, use two pullup resistors greater than 1 kΩ from the $\overline{OUTA}$ and $\overline{OUTB}$ pins to the VDD pin. A separate supply, VDDIO, may be used for the pullup voltage to set the output voltage level to the level required by the MCU, as shown in Figure 8. The open-drain output gives flexibility of pulling up to any voltage independent of VDD (VDDIO must be less than or equal to VDD + 0.3 V). This allows for use of longer cables or different power supply options. If a separate voltage level is not required, TI recommends to tie the pullup to the TMP390 VDD.

If the SETA or SETB connected resistor value is outside the legal range, the associated output goes to permanent output zero stage and the channel cannot be used. The other channel still will be in operating condition, and device can be used in one channel mode. If the SETB input is grounded or left floating, the Channel B cannot be used and the hysteresis for Channel A cannot be guaranteed. The SETA and SETB connected resistors are measured during POR. If two consecutive measurements are not matching each other, then the device sets the associated channel output to zero and repeats the resistor measurements until the measurements match. When the measurements match, the channel output is released. Note that it is possible to connect some device outputs together by shorting the $\overline{OUTA}$ or $\overline{OUTB}$ line.

Copyright © 2019, Texas Instruments Incorporated

Typical Applications (continued)

8.2.1.2 Detailed Design Procedure

The resistor to ground values on the SETA input sets the T_{TRIP} threshold of Channel A. The resistor to ground value on the SETB input sets the T_{TRIP} threshold of Channel B—as well as the T_{HYST} 5°C, and 10°C options—to prevent undesired digital output switching. TI recommends that the resistors at SETA and SETB have a 1% tolerance from the E-96 series of resistance values to comply with the programmed trip settings of the TMP390. Each resistor can range from 1.05 KΩ to 909 KΩ, representing one of 48 unique values. The exact temperature thresholds and trip points are shown in Table 1, Table 2, and . The pullup resistors should be at least 1 kΩ to minimize internal power dissipation. To get the correct threshold for resistor values, take care to minimize the board level capacitance and leakage at SETA and SETB pins.

The waveform for the TMP390 output under the hot/cold thresholds is shown in Figure 9. The hysteresis can be set to either 5°C, or 10°C. When the temperature exceeds the hot trip point threshold, $\overline{OUTA}$ goes low until the temperature drops below the hysteresis threshold. When the temperature drops below the cold trip threshold, $\overline{OUTB}$ goes low and returns high after the temperature rises above the hysteresis threshold. If the switch has already tripped and the temperature is in the hysteresis band, a POR event will cause the output to go high after the power is restored.

8.2.1.3 Application Curves

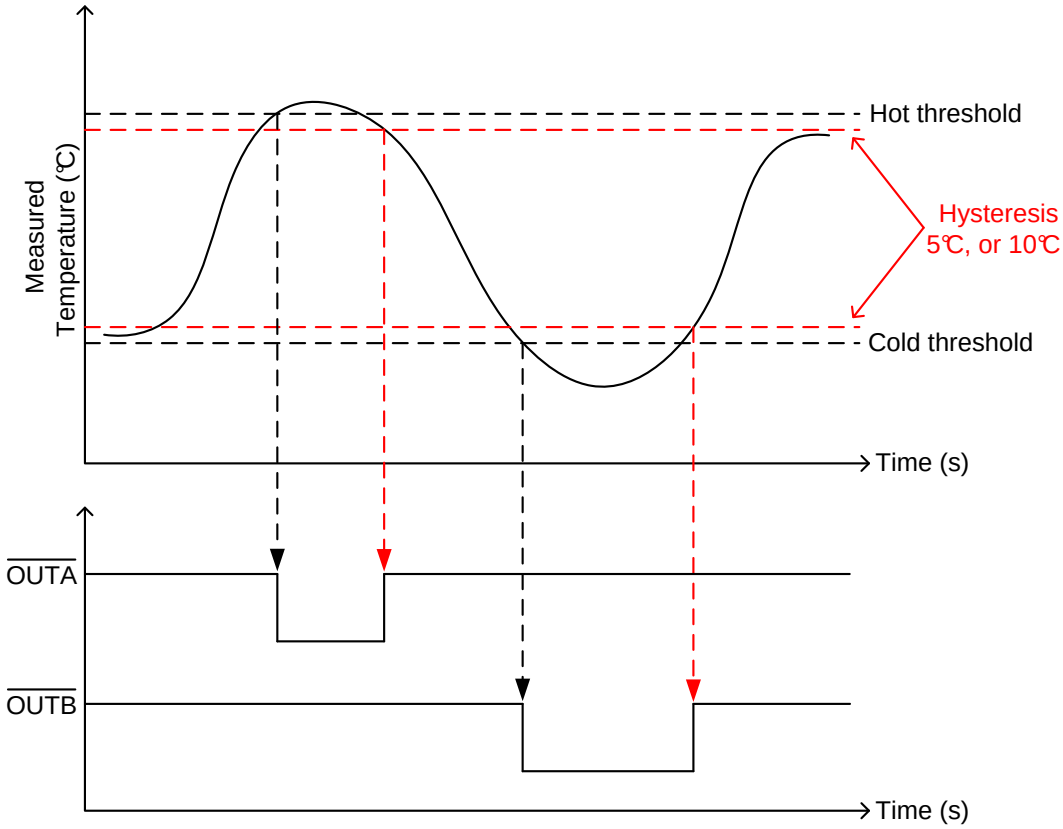

Figure 9. TMP390 Output With Hot/Cold Thresholds With Hysteresis

8.2.2 TMP390 With 10°C Hysteresis

Figure 10 shows an example circuit for overtemperature and undertemperature protection using the TMP390. In this example, the trip points are set at –25°C and +90°C with 10°C hysteresis.

Typical Applications (continued)

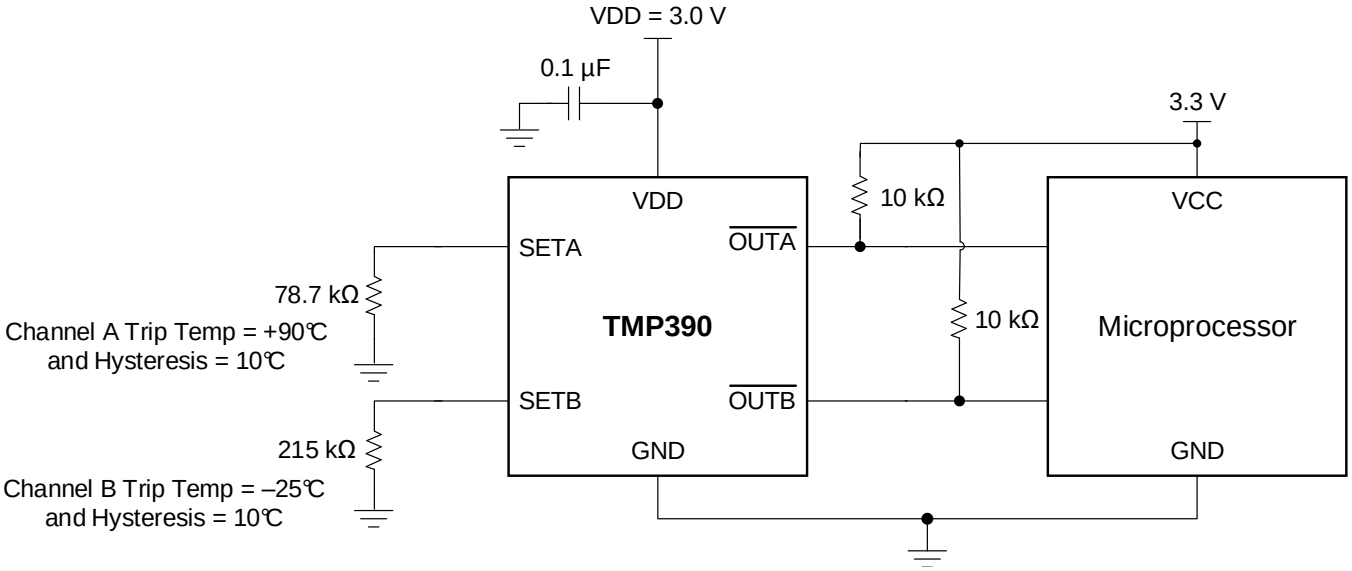

Figure 10. TMP390 Example Circuit at +90°C and –25°C Thresholds With 10°C Hysteresis

8.2.2.1 Design Requirements

In this example, VDD can be ≥ 3 V. The output pins may be tied to a switch to control a fan or other analog circuitry. Figure 10 uses 10-kΩ pullup resistors at the $\overline{\text{OUTA}}$ and $\overline{\text{OUTB}}$ outputs. Place a 0.1-µF bypass capacitor close to the TMP390 device to reduce noise coupled from the power supply. If needed, the output of multiple parts can be connected together.

8.2.2.2 Detailed Design Procedure

SETA sets the +90°C threshold using 78.7 kΩ. SETB sets the –25°C trip point and 10°C hysteresis using 215 kΩ. These values were determined using Table 1 and Table 2. These resistors should have maximum of 1% tolerance and 100 ppm/°C or less over the desired temperature range. A summary of the resistor settings used in this example is shown in Table 3. See Table 1 and Table 2 for additional trip points and hysteresis configurations.

The switching output of the TMP390 can be visualized with the output diagram shown in Figure 11. It is key to notice that hysteresis is subtracted from the Channel A threshold and added to the Channel B threshold values. $\overline{\text{OUTA}}$ remains high until the sensor reaches +90°C where the output goes low, and returns high after the temperature drops back down to +80°C. $\overline{\text{OUTB}}$ trips when the temperature stays below –25°C and goes low until the temperature rises above –15°C.

Table 3. Example Resistor Settings and Trip Points

CHANNEL	RESISTOR SETTING (kΩ)	HYSTERESIS (°C)	TRIP TEMPERATURE (°C)
SETA	78.7	10	+90
SETB	215		–25

Copyright © 2019, Texas Instruments Incorporated

8.2.2.3 Application Curve

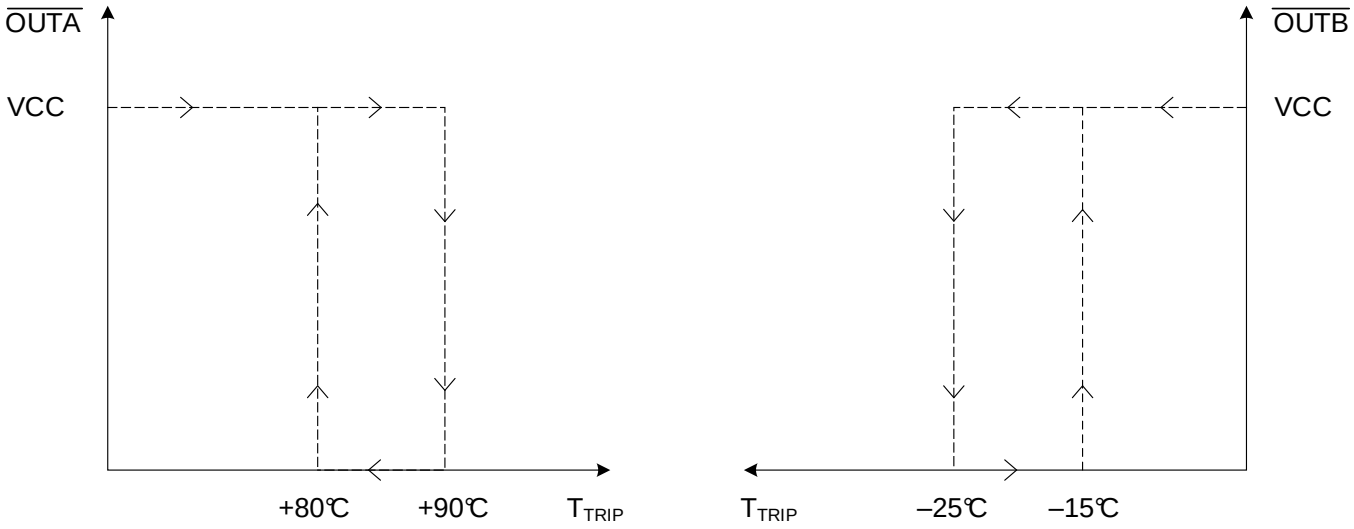

Figure 11. TMP390 Output Response With Hysteresis

8.2.3 One Channel Operation for Hot Trip Point

Figure 12 shows the TMP390 configured for one channel operation, with a single resistor to set the hot trip point and hysteresis. Table 4 shows the possible resistor values and hysteresis values that may be used for one channel applications.

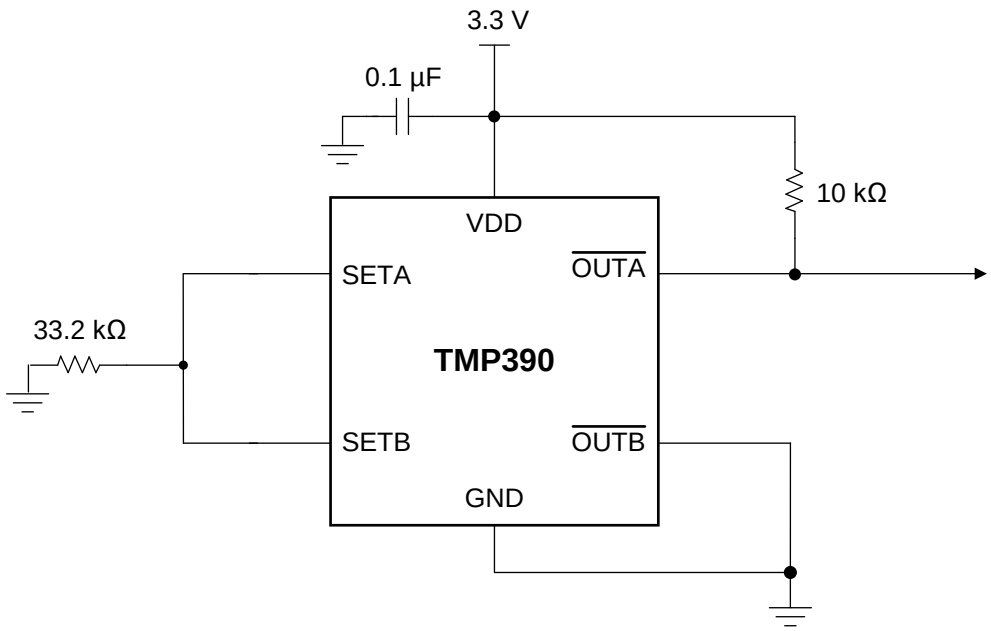

Figure 12. TMP390 One Channel (Hot) Operation Example Circuit With 78°C Trip Point and 5°C Hysteresis

Table 4. Single Resistor One Channel Setting

NOMINAL 1% RESISTOR (KΩ)	CHANNEL A TRIP TEMPERATURE (°C)	HYSTERESIS (°C)
10.5	62	5
12.1	64	5
14.0	66	5
16.2	68	5
18.7	70	5
21.5	72	5
24.9	74	5
28.7	76	5
33.2	78	5
38.3	80	5
44.2	82	5
51.1	84	5
59.0	86	5
68.1	88	5
78.7	90	5
90.0	92	5
105	94	10
121	96	10
140	98	10
162	100	10
187	102	10

Copyright © 2019, Texas Instruments Incorporated

Table 4. Single Resistor One Channel Setting (continued)

NOMINAL 1% RESISTOR (KΩ)	CHANNEL A TRIP TEMPERATURE (°C)	HYSTERESIS (°C)
215	104	10
249	106	10
287	108	10
332	110	10
383	112	10
442	114	10
511	116	10
590	118	10
681	120	10
787	122	10
909	124	10

8.2.3.1 Application Curve

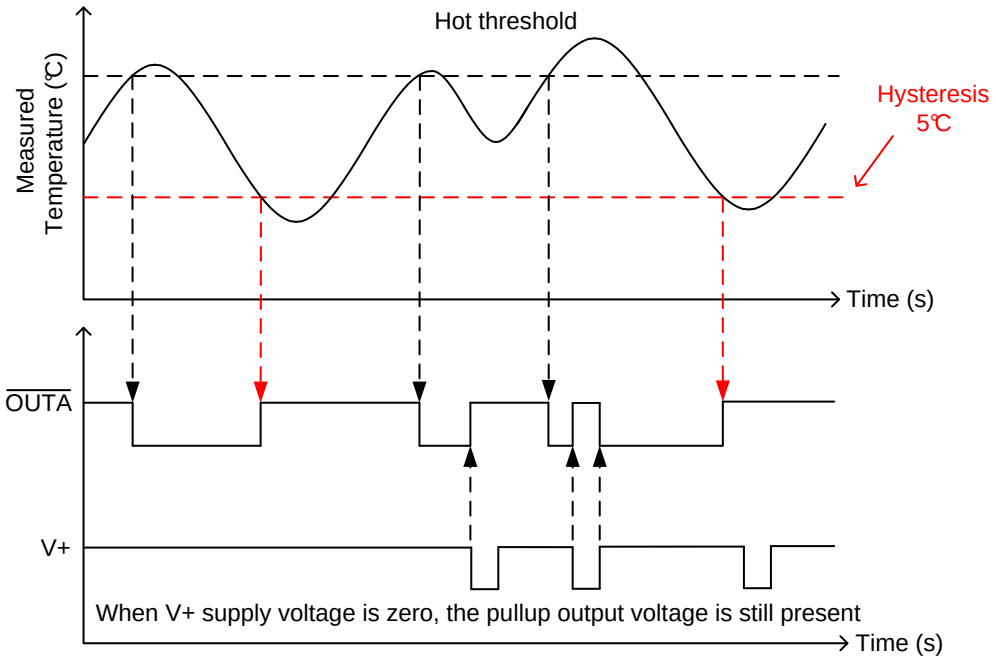

Figure 13. TMP390 One Channel (Hot) Operation Thresholds and Hysteresis

8.2.4 One Channel Operation for Cold Trip Point

Figure 14 shows the TMP390 configured for one channel operation, with a single resistor to set the cold trip point and hysteresis. The resistor values for one channel cold trip point is same as described in Table 2.

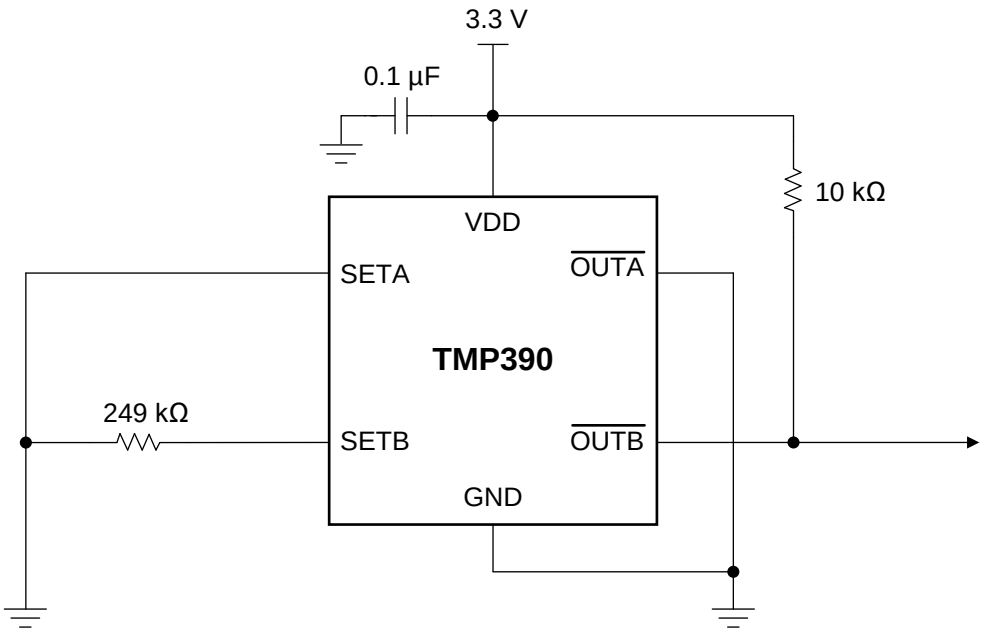

Figure 14. TMP390 One Channel (Cold) Operation Example Circuit With –20°C Trip Point and 10°C Hysteresis

8.2.4.1 Application Curve

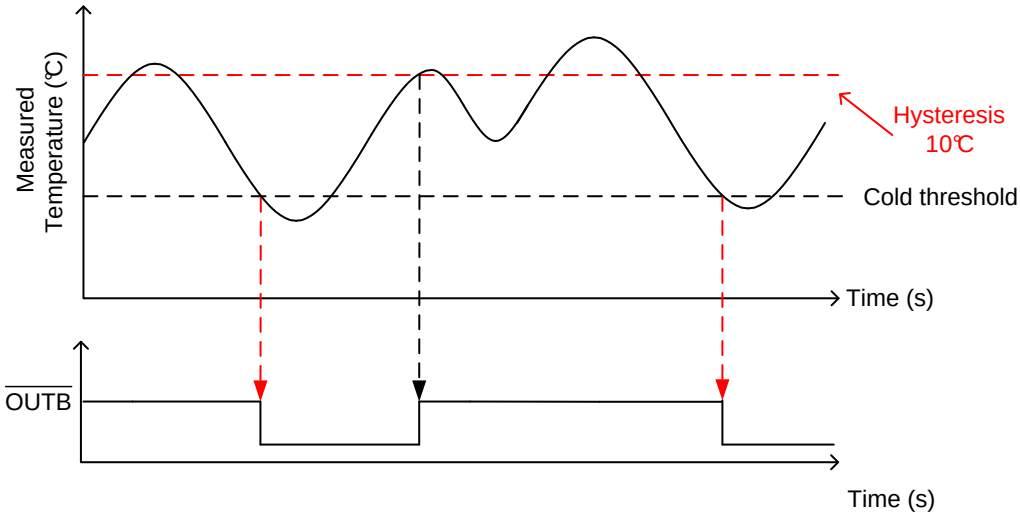

Figure 15. TMP390 One Channel (Cold) Operation Thresholds and Hysteresis

Copyright © 2019, Texas Instruments Incorporated

9 Power Supply Recommendations

The low supply current and wide supply range of the TMP390 allow the device to be powered from many sources. VDDIO must always be lower than or equal to VDD + 0.3 V.

Power supply bypassing is strongly recommended by adding a 0.1-µF capacitor from VDD to GND. In noisy environments, TI recommends to add a filter with 0.1-µF capacitor and 100-Ω resistor between external supply and VDD to limit the power supply noise.

10 Layout

10.1 Layout Guidelines

The TMP390 is extremely simple to layout. Place the power supply bypass capacitor as close to the device as possible, and connect the capacitor as shown in Figure 16. Place the R_{SETA} and R_{SETB} resistors as close to the device as possible. Carefully consider the resistor placement to avoid additional leakage or parasitic capacitance, as this may affect the actual sense value for the trip thresholds and hysteresis.

10.2 Layout Example

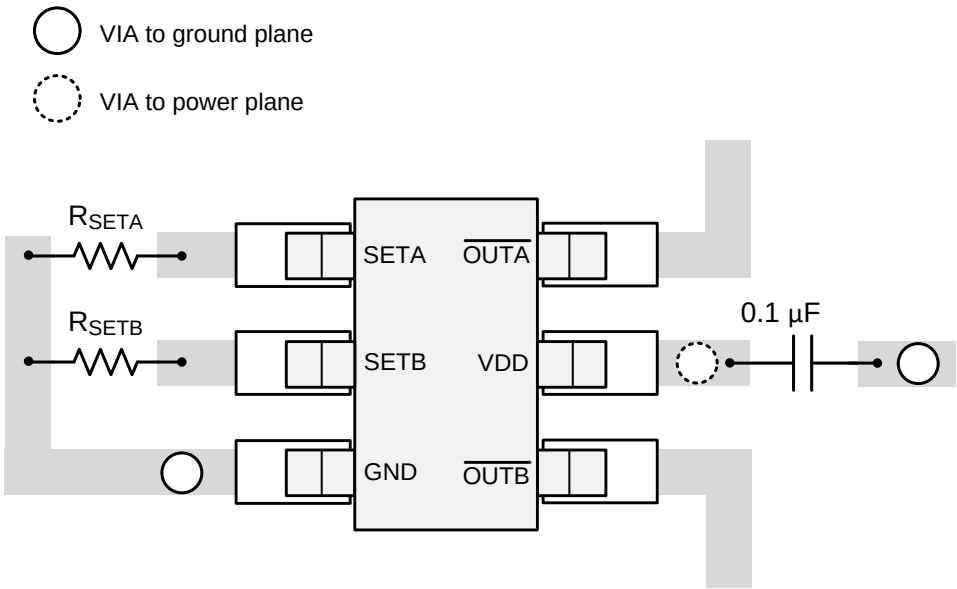

Figure 16. TMP390 Recommended Layout

11 Device and Documentation Support

11.1 Receiving Notification of Documentation Updates

To receive notification of documentation updates, navigate to the device product folder on ti.com. In the upper right corner, click on *Alert me* to register and receive a weekly digest of any product information that has changed. For change details, review the revision history included in any revised document.

11.2 Community Resources

The following links connect to TI community resources. Linked contents are provided "AS IS" by the respective contributors. They do not constitute TI specifications and do not necessarily reflect TI's views; see TI's Terms of Use.

TI E2E™ Online Community ***TI's Engineer-to-Engineer (E2E) Community.*** Created to foster collaboration among engineers. At e2e.ti.com, you can ask questions, share knowledge, explore ideas and help solve problems with fellow engineers.

Design Support ***TI's Design Support*** Quickly find helpful E2E forums along with design support tools and contact information for technical support.

11.3 Trademarks

E2E is a trademark of Texas Instruments.
All other trademarks are the property of their respective owners.

11.4 Electrostatic Discharge Caution

This integrated circuit can be damaged by ESD. Texas Instruments recommends that all integrated circuits be handled with appropriate precautions. Failure to observe proper handling and installation procedures can cause damage.

ESD damage can range from subtle performance degradation to complete device failure. Precision integrated circuits may be more susceptible to damage because very small parametric changes could cause the device not to meet its published specifications.

11.5 Glossary

SLYZ022 — *TI Glossary*.

This glossary lists and explains terms, acronyms, and definitions.

12 Mechanical, Packaging, and Orderable Information

The following pages include mechanical, packaging, and orderable information. This information is the most current data available for the designated devices. This data is subject to change without notice and revision of this document. For browser-based versions of this data sheet, refer to the left-hand navigation.

Copyright © 2019, Texas Instruments Incorporated

PACKAGING INFORMATION

Orderable Device	Status (1)	Package Type	Package Drawing	Pins	Package Qty	Eco Plan (2)	Lead/Ball Finish (6)	MSL Peak Temp (3)	Op Temp (°C)	Device Marking (4/5)	Samples
TMP390A2DRLR	ACTIVE	SOT-5X3	DRL	6	4000	Green (RoHS & no Sb/Br)	NIPDAUAG	Level-2-260C-1 YEAR	-55 to 130	1C4	Samples
TMP390A2DRLT	ACTIVE	SOT-5X3	DRL	6	250	Green (RoHS & no Sb/Br)	NIPDAUAG	Level-2-260C-1 YEAR	-55 to 130	1C4	Samples
TMP390A3DRLR	ACTIVE	SOT-5X3	DRL	6	4000	Green (RoHS & no Sb/Br)	NIPDAUAG	Level-2-260C-1 YEAR	-55 to 130	1C6	Samples
TMP390A3DRLT	ACTIVE	SOT-5X3	DRL	6	250	Green (RoHS & no Sb/Br)	NIPDAUAG	Level-2-260C-1 YEAR	-55 to 130	1C6	Samples

(1) The marketing status values are defined as follows:
ACTIVE: Product device recommended for new designs.
LIFEBUY: TI has announced that the device will be discontinued, and a lifetime-buy period is in effect.
NRND: Not recommended for new designs. Device is in production to support existing customers, but TI does not recommend using this part in a new design.
PREVIEW: Device has been announced but is not in production. Samples may or may not be available.
OBSOLETE: TI has discontinued the production of the device.

(2) **RoHS:** TI defines "RoHS" to mean semiconductor products that are compliant with the current EU RoHS requirements for all 10 RoHS substances, including the requirement that RoHS substance do not exceed 0.1% by weight in homogeneous materials. Where designed to be soldered at high temperatures, "RoHS" products are suitable for use in specified lead-free processes. TI may reference these types of products as "Pb-Free".
RoHS Exempt: TI defines "RoHS Exempt" to mean products that contain lead but are compliant with EU RoHS pursuant to a specific EU RoHS exemption.
Green: TI defines "Green" to mean the content of Chlorine (Cl) and Bromine (Br) based flame retardants meet JS709B low halogen requirements of <=1000ppm threshold. Antimony trioxide based flame retardants must also meet the <=1000ppm threshold requirement.

(3) MSL, Peak Temp. - The Moisture Sensitivity Level rating according to the JEDEC industry standard classifications, and peak solder temperature.

(4) There may be additional marking, which relates to the logo, the lot trace code information, or the environmental category on the device.

(5) Multiple Device Markings will be inside parentheses. Only one Device Marking contained in parentheses and separated by a "~" will appear on a device. If a line is indented then it is a continuation of the previous line and the two combined represent the entire Device Marking for that device.

(6) Lead/Ball Finish - Orderable Devices may have multiple material finish options. Finish options are separated by a vertical ruled line. Lead/Ball Finish values may wrap to two lines if the finish value exceeds the maximum column width.

Important Information and Disclaimer: The information provided on this page represents TI's knowledge and belief as of the date that it is provided. TI bases its knowledge and belief on information provided by third parties, and makes no representation or warranty as to the accuracy of such information. Efforts are underway to better integrate information from third parties. TI has taken and

continues to take reasonable steps to provide representative and accurate information but may not have conducted destructive testing or chemical analysis on incoming materials and chemicals.
TI and TI suppliers consider certain information to be proprietary, and thus CAS numbers and other limited information may not be available for release.

In no event shall TI's liability arising out of such information exceed the total purchase price of the TI part(s) at issue in this document sold by TI to Customer on an annual basis.

OTHER QUALIFIED VERSIONS OF TMP390 :

- Automotive: TMP390-Q1

NOTE: Qualified Version Definitions:

- Automotive - Q100 devices qualified for high-reliability automotive applications targeting zero defects

TAPE AND REEL INFORMATION

REEL DIMENSIONS

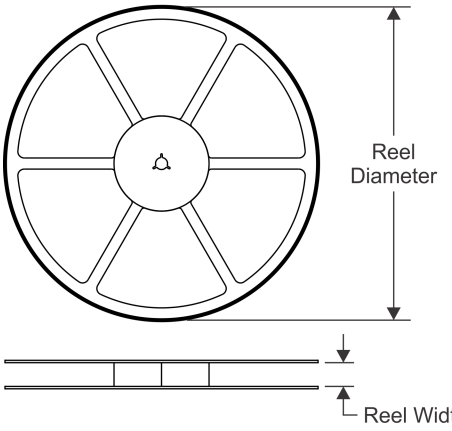

TAPE DIMENSIONS

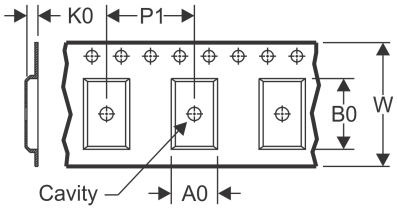

A0	Dimension designed to accommodate the component width
B0	Dimension designed to accommodate the component length
K0	Dimension designed to accommodate the component thickness
W	Overall width of the carrier tape
P1	Pitch between successive cavity centers

QUADRANT ASSIGNMENTS FOR PIN 1 ORIENTATION IN TAPE

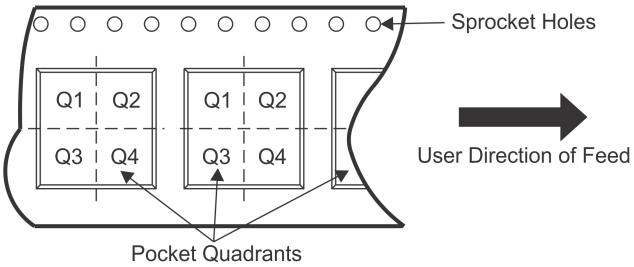

*All dimensions are nominal

Device	Package Type	Package Drawing	Pins	SPQ	Reel Diameter (mm)	Reel Width W1 (mm)	A0 (mm)	B0 (mm)	K0 (mm)	P1 (mm)	W (mm)	Pin1 Quadrant
TMP390A2DRLR	SOT-5X3	DRL	6	4000	180.0	8.4	1.98	1.78	0.69	4.0	8.0	Q3
TMP390A2DRLT	SOT-5X3	DRL	6	250	180.0	8.4	1.98	1.78	0.69	4.0	8.0	Q3
TMP390A3DRLR	SOT-5X3	DRL	6	4000	180.0	8.4	1.98	1.78	0.69	4.0	8.0	Q3
TMP390A3DRLT	SOT-5X3	DRL	6	250	180.0	8.4	1.98	1.78	0.69	4.0	8.0	Q3

TAPE AND REEL BOX DIMENSIONS

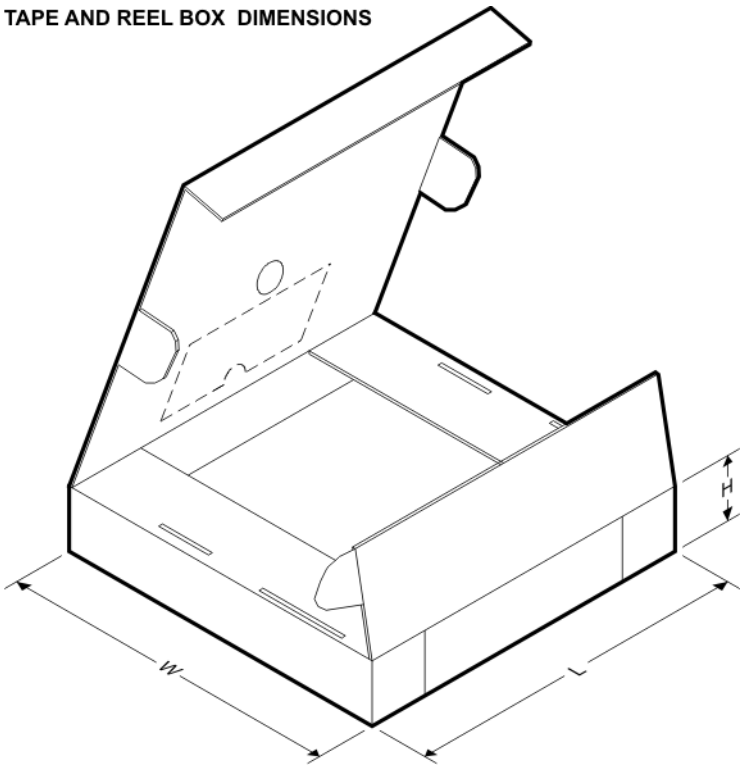

*All dimensions are nominal

Device	Package Type	Package Drawing	Pins	SPQ	Length (mm)	Width (mm)	Height (mm)
TMP390A2DRLR	SOT-5X3	DRL	6	4000	213.0	191.0	35.0
TMP390A2DRLT	SOT-5X3	DRL	6	250	213.0	191.0	35.0
TMP390A3DRLR	SOT-5X3	DRL	6	4000	213.0	191.0	35.0
TMP390A3DRLT	SOT-5X3	DRL	6	250	213.0	191.0	35.0

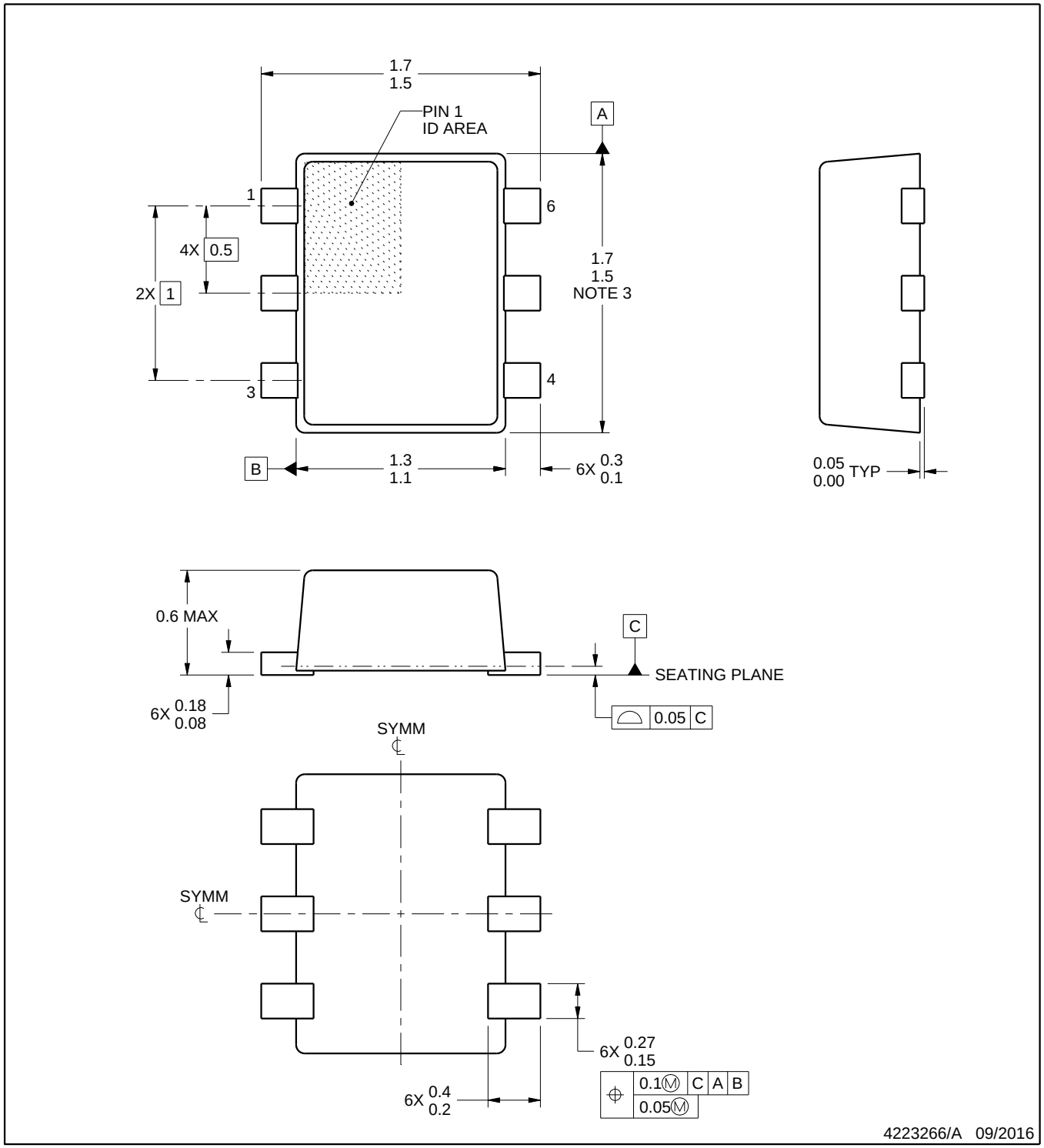

NOTES:

1. All linear dimensions are in millimeters. Any dimensions in parenthesis are for reference only. Dimensioning and tolerancing per ASME Y14.5M.
2. This drawing is subject to change without notice.
3. This dimension does not include mold flash, protrusions, or gate burrs. Mold flash, protrusions, or gate burrs shall not exceed 0.15 mm per side.

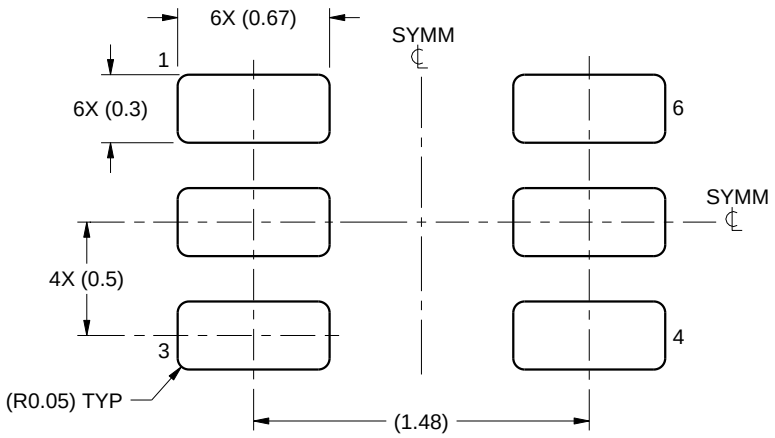

LAND PATTERN EXAMPLE
SCALE:30X

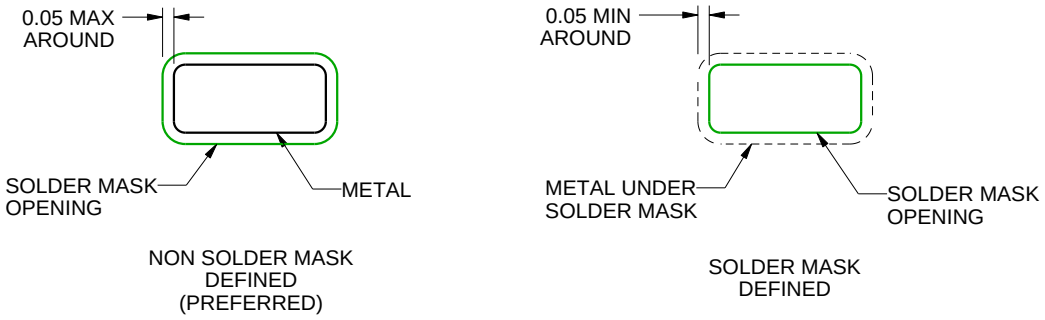

SOLDERMASK DETAILS

4223266/A 09/2016

NOTES: (continued)

4. Publication IPC-7351 may have alternate designs.
5. Solder mask tolerances between and around signal pads can vary based on board fabrication site.

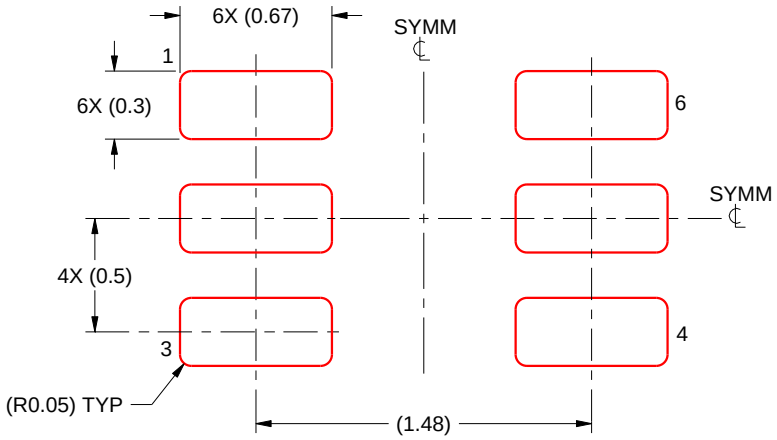

SOLDER PASTE EXAMPLE
BASED ON 0.1 mm THICK STENCIL
SCALE:30X

4223266/A 09/2016

NOTES: (continued)

6. Laser cutting apertures with trapezoidal walls and rounded corners may offer better paste release. IPC-7525 may have alternate design recommendations.
7. Board assembly site may have different recommendations for stencil design.

IMPORTANT NOTICE AND DISCLAIMER

TI PROVIDES TECHNICAL AND RELIABILITY DATA (INCLUDING DATASHEETS), DESIGN RESOURCES (INCLUDING REFERENCE DESIGNS), APPLICATION OR OTHER DESIGN ADVICE, WEB TOOLS, SAFETY INFORMATION, AND OTHER RESOURCES “AS IS” AND WITH ALL FAULTS, AND DISCLAIMS ALL WARRANTIES, EXPRESS AND IMPLIED, INCLUDING WITHOUT LIMITATION ANY IMPLIED WARRANTIES OF MERCHANTABILITY, FITNESS FOR A PARTICULAR PURPOSE OR NON-INFRINGEMENT OF THIRD PARTY INTELLECTUAL PROPERTY RIGHTS.

These resources are intended for skilled developers designing with TI products. You are solely responsible for (1) selecting the appropriate TI products for your application, (2) designing, validating and testing your application, and (3) ensuring your application meets applicable standards, and any other safety, security, or other requirements. These resources are subject to change without notice. TI grants you permission to use these resources only for development of an application that uses the TI products described in the resource. Other reproduction and display of these resources is prohibited. No license is granted to any other TI intellectual property right or to any third party intellectual property right. TI disclaims responsibility for, and you will fully indemnify TI and its representatives against, any claims, damages, costs, losses, and liabilities arising out of your use of these resources.

TI’s products are provided subject to TI’s Terms of Sale (www.ti.com/legal/termsofsale.html) or other applicable terms available either on ti.com or provided in conjunction with such TI products. TI’s provision of these resources does not expand or otherwise alter TI’s applicable warranties or warranty disclaimers for TI products.

Mailing Address: Texas Instruments, Post Office Box 655303, Dallas, Texas 75265
Copyright © 2020, Texas Instruments Incorporated