- **BiCMOS Technology With Low Quiescent Power**
- **Buffered Inputs**
- **Noninverted Outputs**
- **Input/Output Isolation From V_{CC}**
- **Controlled Output Edge Rates**
- **64-mA Output Sink Current**
- **Output Voltage Swing Limited to 3.7 V**
- **SCR Latch-Up-Resistant BiCMOS Process and Circuit Design**
- **Package Options Include Plastic Small-Outline (M) and Shrink Small-Outline (SM) Packages and Standard Plastic (E) DIP**

E, M, OR SM PACKAGE
(TOP VIEW)

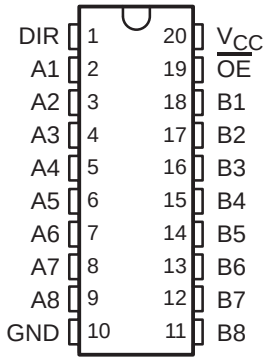

description

The CD74FCT245 is an octal bus transceiver with 3-state outputs using a small-geometry BiCMOS technology. The output stages are a combination of bipolar and CMOS transistors that limit the output high level to two diode drops below V_{CC}. This resultant lowering of output swing (0 V to 3.7 V) reduces the power-bus ringing [a source of electromagnetic interference (EMI)] and minimizes V_{CC} bounce and ground bounce and their effects during simultaneous output switching. The output configuration also enhances switching speed and is capable of sinking 64 mA.

The CD74FCT245 allows data transmission from the A bus to the B bus or from the B bus to the A bus, depending upon the logic level at the direction-control (DIR) input. The output-enable ($\overline{OE}$) input can be used to disable the device so that the buses are effectively isolated.

To ensure the high-impedance state during power up or power down, $\overline{OE}$ should be tied to V_{CC} through a pullup resistor; the minimum value of the resistor is determined by the current-sinking capability of the driver.

The CD74FCT245 is characterized for operation from 0°C to 70°C.

FUNCTION TABLE

INPUTS		OPERATION
$\overline{OE}$	DIR	
L	L	B data to A bus
L	H	A data to B bus
H	X	Isolation

Please be aware that an important notice concerning availability, standard warranty, and use in critical applications of Texas Instruments semiconductor products and disclaimers thereto appears at the end of this data sheet.

PRODUCTION DATA information is current as of publication date. Products conform to specifications per the terms of Texas Instruments standard warranty. Production processing does not necessarily include testing of all parameters.

Copyright © 2000, Texas Instruments Incorporated

logic symbol†

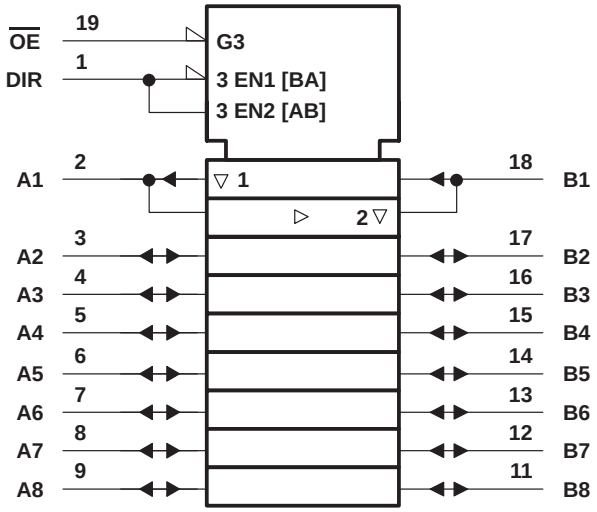

† This symbol is in accordance with ANSI/IEEE Std 91-1984 and IEC Publication 617-12.

logic diagram (positive logic)

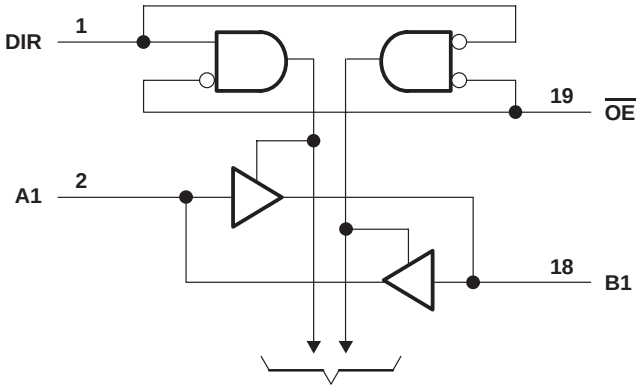

absolute maximum ratings over operating free-air temperature range (unless otherwise noted)†

DC supply voltage range, V_{CC} . . . . . –0.5 V to 6 V
DC input clamp current, I_{IK} (V_I < –0.5 V) . . . . . –20 mA
DC output clamp current, I_{OK} (V_O < –0.5 V) . . . . . –50 mA
DC output sink current per output pin, I_{OL}) . . . . . 70 mA
DC output source current per output pin, I_{OH}) . . . . . –30 mA
Continuous current through V_{CC}, I_{CC}) . . . . . 140 mA
Continuous current through GND) . . . . . 528 mA
Package thermal impedance, θ_{JA} (see Note 1): E package) . . . . . 69°C/W
M package) . . . . . 58°C/W
SM package) . . . . . 70°C/W
Storage temperature range, T_{stg}) . . . . . –65°C to 150°C

† Stresses beyond those listed under "absolute maximum ratings" may cause permanent damage to the device. These are stress ratings only, and functional operation of the device at these or any other conditions beyond those indicated under "recommended operating conditions" is not implied. Exposure to absolute-maximum-rated conditions for extended periods may affect device reliability.
NOTE 1: The package thermal impedance is calculated in accordance with JESD 51.

recommended operating conditions (see Note 2)

		MIN	MAX	UNIT
V_{CC}	Supply voltage	4.75	5.25	V
V_{IH}	High-level input voltage	2		V
V_{IL}	Low-level input voltage		0.8	V
V_I	Input voltage	0	V_{CC}	V
V_O	Output voltage	0	V_{CC}	V
I_{OH}	High-level output current		–15	mA
I_{OL}	Low-level output current		64	mA
$\Delta t/\Delta v$	Input transition rise or fall rate	0	10	ns/V
T_A	Operating free-air temperature	0	70	°C

NOTE 2: All unused inputs of the device must be held at V_{CC} or GND to ensure proper device operation. Refer to the TI application report, *Implications of Slow or Floating CMOS Inputs*, literature number SCBA004.

electrical characteristics over recommended operating free-air temperature range (unless otherwise noted)

PARAMETER	TEST CONDITIONS		V_{CC}	T_A = 25°C		MIN	MAX	UNIT
				MIN	MAX			
V_{IK}	I_I = –18 mA		4.75 V		–1.2		–1.2	V
V_{OH}	I_{OH} = –15 mA		4.75 V	2.4		2.4		V
V_{OL}	I_{OL} = 64 mA		4.75 V		0.55		0.55	V
I_I	V_I = V_{CC} or GND		5.25 V		±0.1		±1	μA
I_{OZ}	V_O = V_{CC} or GND		5.25 V		±0.5		±10	μA
I_{OS}‡	V_I = V_{CC} or GND,	V_O = 0	5.25 V	–60		–60		mA
I_{CC}	V_I = V_{CC} or GND,	I_O = 0	5.25 V		8		80	μA
ΔI_{CC}§	One input at 3.4 V, Other inputs at V_{CC} or GND		5.25 V		1.6		1.6	mA
C_i	V_I = V_{CC} or GND				10		10	pF
C_o	V_O = V_{CC} or GND				15		15	pF

‡ Not more than one output should be tested at a time, and the duration of the test should not exceed 100 ms.
§ This is the increase in supply current for each input at one of the specified TTL voltage levels rather than 0 V or V_{CC}.

switching characteristics over recommended operating conditions (unless otherwise noted) (see Figure 1)

PARAMETER	FROM (INPUT)	TO (OUTPUT)	T_A = 25°C TYP	MIN	MAX	UNIT
t_{pd}	A or B	B or A	5	1.5	7	ns
t_{en}	$\overline{OE}$	A or B	6	1.5	9.5	ns
t_{dis}	$\overline{OE}$	A or B	6	1.5	7.5	ns

noise characteristics, V_{CC} = 5 V, C_L = 50 pF, T_A = 25°C

PARAMETER		MIN	TYP	MAX	UNIT
$V_{OL(P)}$	Quiet output, maximum dynamic V_{OL}		1		V
$V_{OH(V)}$	Quiet output, minimum dynamic V_{OH}		0.5		V
$V_{IH(D)}$	High-level dynamic input voltage	2			V
$V_{IL(D)}$	Low-level dynamic input voltage			0.8	V

operating characteristics, T_A = 25°C

PARAMETER		TEST CONDITIONS	TYP	UNIT
C_{pd}	Power dissipation capacitance	No load, f = 1 MHz	49	pF

PARAMETER MEASUREMENT INFORMATION

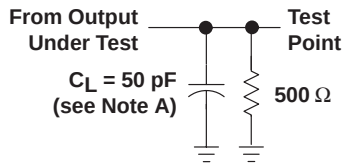

LOAD CIRCUIT FOR
TOTEM-POLE OUTPUTS

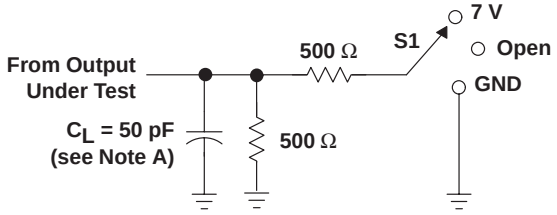

TEST	S1
t_{PLH}/t_{PHL}	Open
t_{PLZ}/t_{PZL}	7 V
t_{PHZ}/t_{PZH}	Open
Open Drain	7 V

LOAD CIRCUIT FOR
3-STATE AND OPEN-DRAIN OUTPUTS

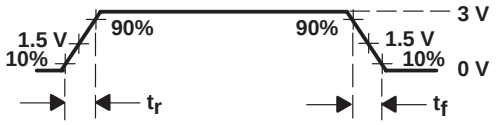

VOLTAGE WAVEFORM
INPUT RISE AND FALL TIMES

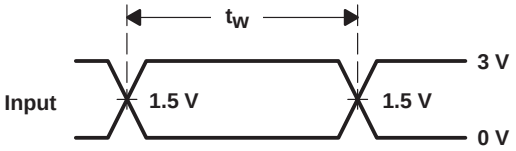

VOLTAGE WAVEFORMS
PULSE DURATION

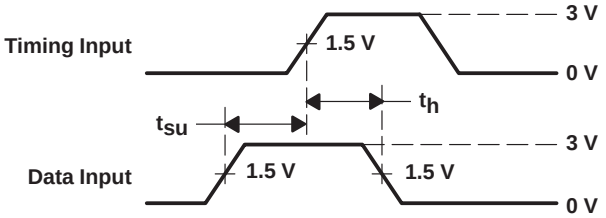

VOLTAGE WAVEFORMS
SETUP AND HOLD TIMES

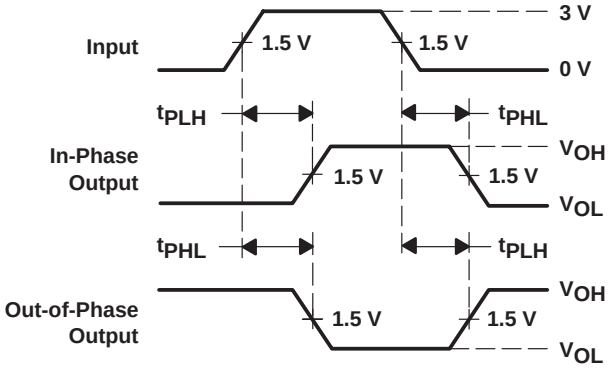

VOLTAGE WAVEFORMS
PROPAGATION DELAY TIMES
INVERTING AND NONINVERTING OUTPUTS

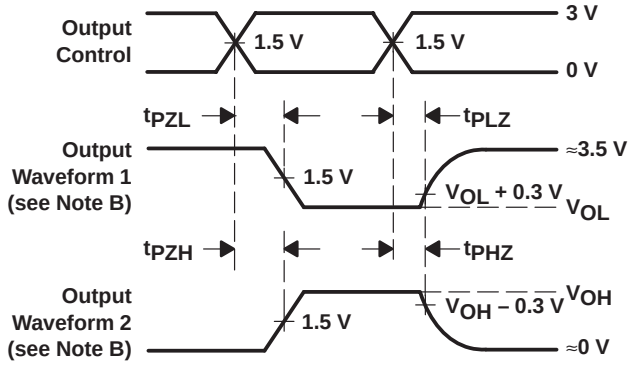

VOLTAGE WAVEFORMS
ENABLE AND DISABLE TIMES
LOW- AND HIGH-LEVEL ENABLING

NOTES:
A. C_L includes probe and jig capacitance.
B. Waveform 1 is for an output with internal conditions such that the output is low except when disabled by the output control. Waveform 2 is for an output with internal conditions such that the output is high except when disabled by the output control.
C. All input pulses are supplied by generators having the following characteristics: PRR ≤ 1 MHz, Z_O = 50 Ω, t_r and t_f = 2.5 ns.
D. The outputs are measured one at a time with one input transition per measurement.
E. t_{PLZ} and t_{PHZ} are the same as t_{dis}.
F. t_{PZL} and t_{PZH} are the same as t_{en}.
G. t_{PHL} and t_{PLH} are the same as t_{pd}.

Figure 1. Load Circuit and Voltage Waveforms

PACKAGING INFORMATION

Orderable Device	Status (1)	Package Type	Package Drawing	Pins	Package Qty	Eco Plan (2)	Lead/Ball Finish (6)	MSL Peak Temp (3)	Op Temp (°C)	Device Marking (4/5)	Samples
CD74FCT245E	ACTIVE	PDIP	N	20	20	Pb-Free (RoHS)	NIPDAU	N / A for Pkg Type	0 to 70	CD74FCT245E	Samples
CD74FCT245M	ACTIVE	SOIC	DW	20	25	Green (RoHS & no Sb/Br)	NIPDAU	Level-1-260C-UNLIM	0 to 70	74FCT245M	Samples
CD74FCT245M96	ACTIVE	SOIC	DW	20	2000	Green (RoHS & no Sb/Br)	NIPDAU	Level-1-260C-UNLIM	0 to 70	74FCT245M	Samples
CD74FCT245MG4	ACTIVE	SOIC	DW	20	25	Green (RoHS & no Sb/Br)	NIPDAU	Level-1-260C-UNLIM	0 to 70	74FCT245M	Samples

(1) The marketing status values are defined as follows:
ACTIVE: Product device recommended for new designs.
LIFEBUY: TI has announced that the device will be discontinued, and a lifetime-buy period is in effect.
NRND: Not recommended for new designs. Device is in production to support existing customers, but TI does not recommend using this part in a new design.
PREVIEW: Device has been announced but is not in production. Samples may or may not be available.
OBSOLETE: TI has discontinued the production of the device.

(2) **RoHS:** TI defines "RoHS" to mean semiconductor products that are compliant with the current EU RoHS requirements for all 10 RoHS substances, including the requirement that RoHS substance do not exceed 0.1% by weight in homogeneous materials. Where designed to be soldered at high temperatures, "RoHS" products are suitable for use in specified lead-free processes. TI may reference these types of products as "Pb-Free".
RoHS Exempt: TI defines "RoHS Exempt" to mean products that contain lead but are compliant with EU RoHS pursuant to a specific EU RoHS exemption.
Green: TI defines "Green" to mean the content of Chlorine (Cl) and Bromine (Br) based flame retardants meet JS709B low halogen requirements of <=1000ppm threshold. Antimony trioxide based flame retardants must also meet the <=1000ppm threshold requirement.

(3) MSL, Peak Temp. - The Moisture Sensitivity Level rating according to the JEDEC industry standard classifications, and peak solder temperature.

(4) There may be additional marking, which relates to the logo, the lot trace code information, or the environmental category on the device.

(5) Multiple Device Markings will be inside parentheses. Only one Device Marking contained in parentheses and separated by a "~" will appear on a device. If a line is indented then it is a continuation of the previous line and the two combined represent the entire Device Marking for that device.

(6) Lead/Ball Finish - Orderable Devices may have multiple material finish options. Finish options are separated by a vertical ruled line. Lead/Ball Finish values may wrap to two lines if the finish value exceeds the maximum column width.

Important Information and Disclaimer: The information provided on this page represents TI's knowledge and belief as of the date that it is provided. TI bases its knowledge and belief on information provided by third parties, and makes no representation or warranty as to the accuracy of such information. Efforts are underway to better integrate information from third parties. TI has taken and

continues to take reasonable steps to provide representative and accurate information but may not have conducted destructive testing or chemical analysis on incoming materials and chemicals.
TI and TI suppliers consider certain information to be proprietary, and thus CAS numbers and other limited information may not be available for release.

In no event shall TI's liability arising out of such information exceed the total purchase price of the TI part(s) at issue in this document sold by TI to Customer on an annual basis.

TAPE AND REEL INFORMATION

REEL DIMENSIONS

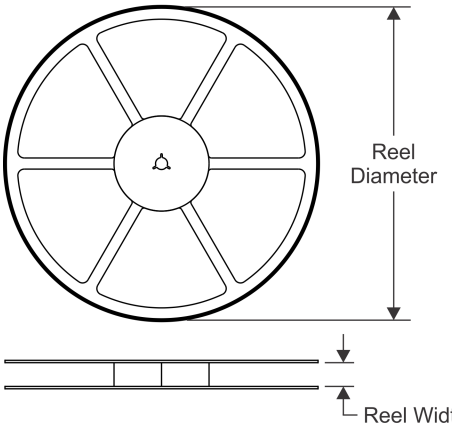

TAPE DIMENSIONS

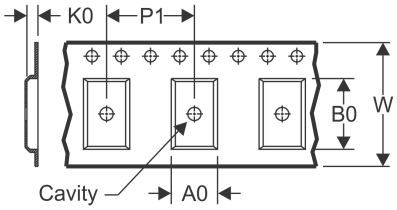

A0	Dimension designed to accommodate the component width
B0	Dimension designed to accommodate the component length
K0	Dimension designed to accommodate the component thickness
W	Overall width of the carrier tape
P1	Pitch between successive cavity centers

QUADRANT ASSIGNMENTS FOR PIN 1 ORIENTATION IN TAPE

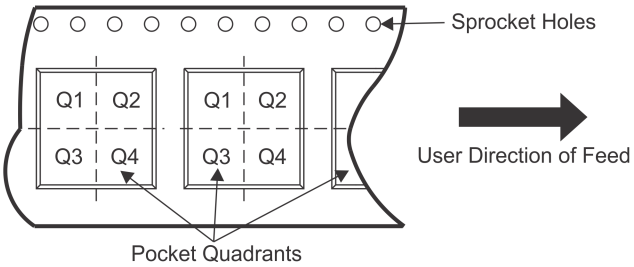

*All dimensions are nominal

Device	Package Type	Package Drawing	Pins	SPQ	Reel Diameter (mm)	Reel Width W1 (mm)	A0 (mm)	B0 (mm)	K0 (mm)	P1 (mm)	W (mm)	Pin1 Quadrant
CD74FCT245M96	SOIC	DW	20	2000	330.0	24.4	10.8	13.0	2.7	12.0	24.0	Q1

TAPE AND REEL BOX DIMENSIONS

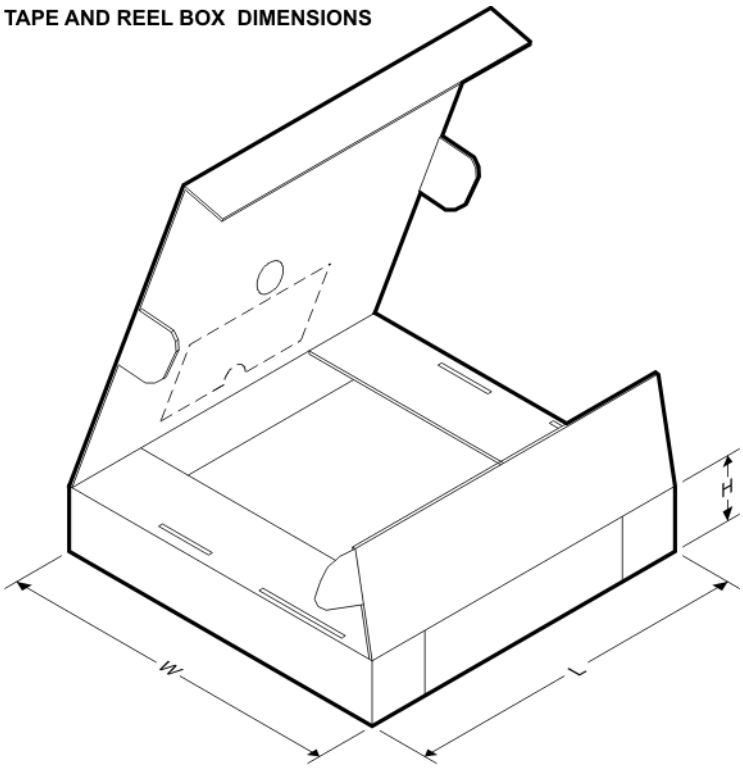

*All dimensions are nominal

Device	Package Type	Package Drawing	Pins	SPQ	Length (mm)	Width (mm)	Height (mm)
CD74FCT245M96	SOIC	DW	20	2000	367.0	367.0	45.0

N (R–PDIP–T**) PLASTIC DUAL–IN–LINE PACKAGE

16 PINS SHOWN

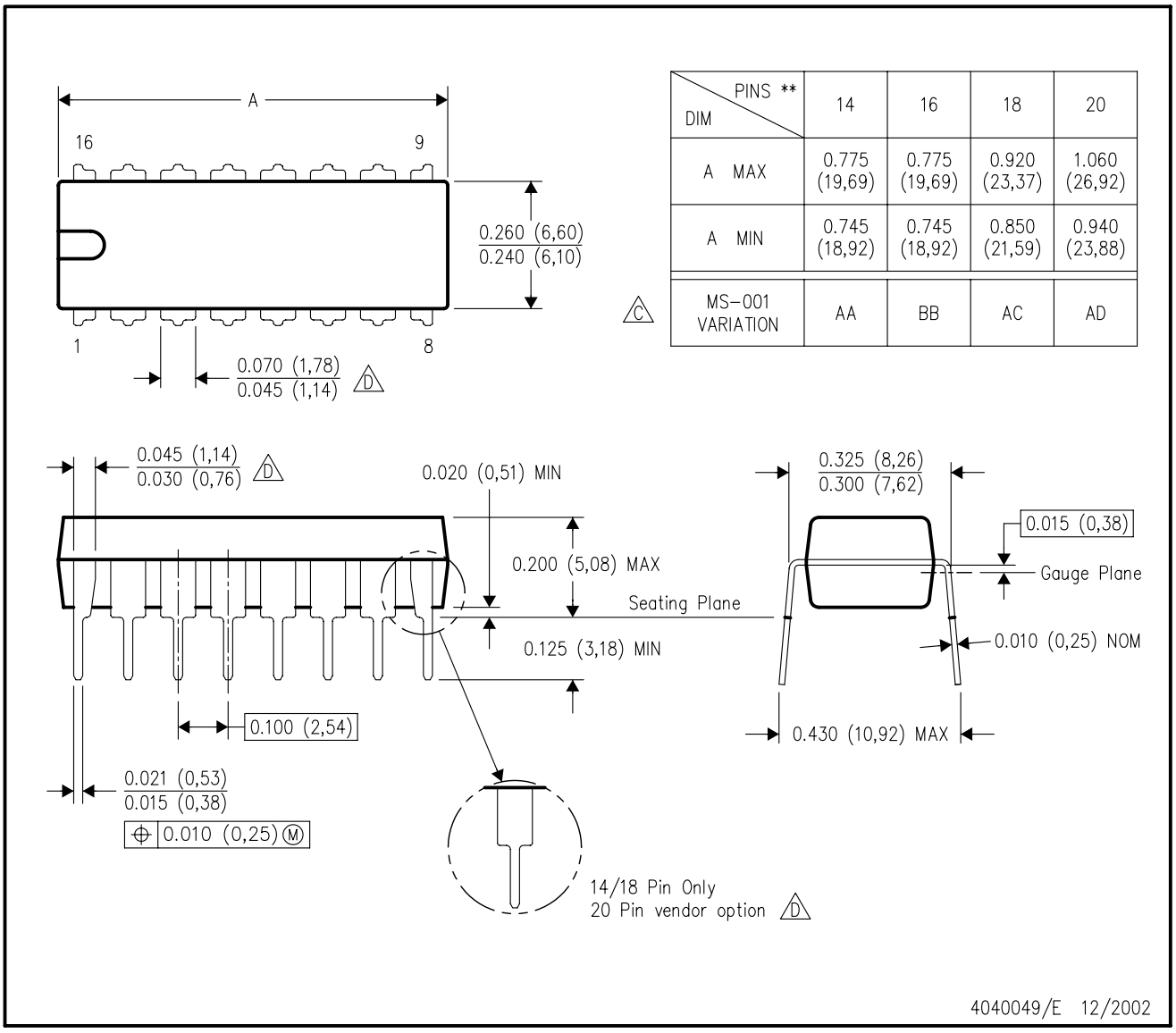

DIM \ PINS **	14	16	18	20
A MAX	0.775 (19,69)	0.775 (19,69)	0.920 (23,37)	1.060 (26,92)
A MIN	0.745 (18,92)	0.745 (18,92)	0.850 (21,59)	0.940 (23,88)
MS–001 VARIATION (C)	AA	BB	AC	AD

NOTES:
A. All linear dimensions are in inches (millimeters).
B. This drawing is subject to change without notice.
C. Falls within JEDEC MS–001, except 18 and 20 pin minimum body length (Dim A).
D. The 20 pin end lead shoulder width is a vendor option, either half or full width.

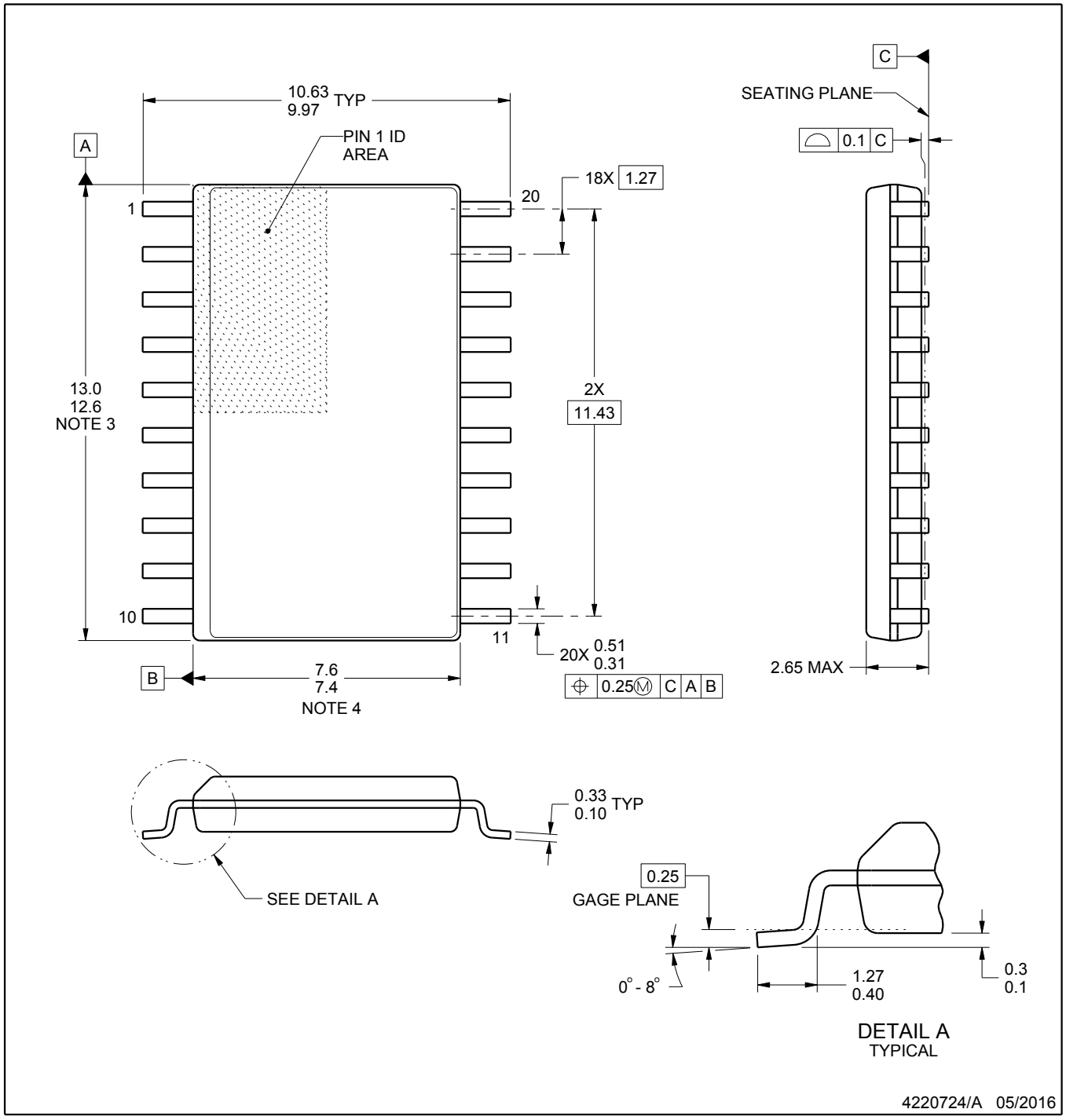

NOTES:

1. All linear dimensions are in millimeters. Dimensions in parenthesis are for reference only. Dimensioning and tolerancing per ASME Y14.5M.
2. This drawing is subject to change without notice.
3. This dimension does not include mold flash, protrusions, or gate burrs. Mold flash, protrusions, or gate burrs shall not exceed 0.15 mm per side.
4. This dimension does not include interlead flash. Interlead flash shall not exceed 0.43 mm per side.
5. Reference JEDEC registration MS-013.

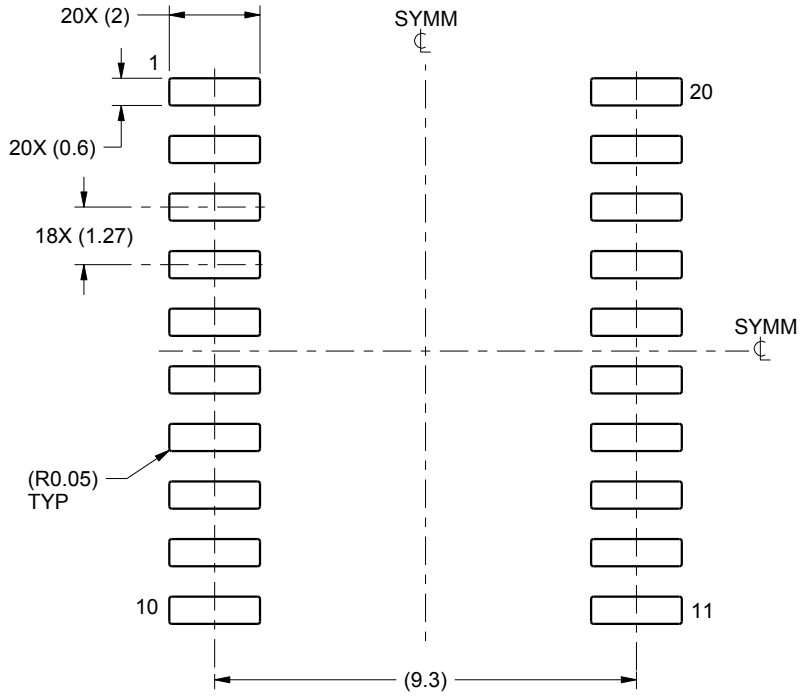

LAND PATTERN EXAMPLE
SCALE:6X

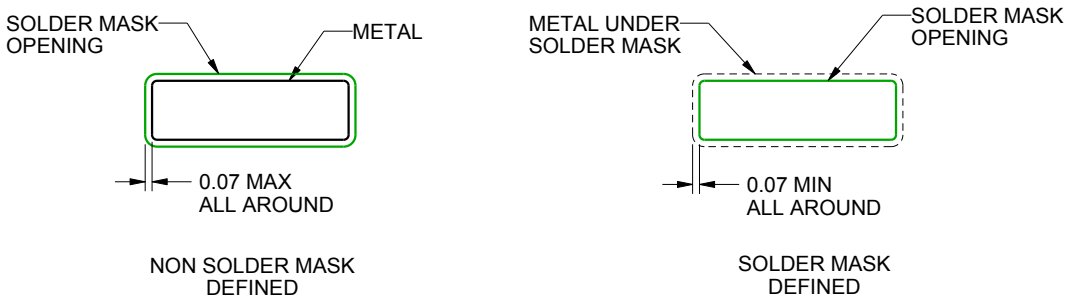

SOLDER MASK DETAILS

4220724/A 05/2016

NOTES: (continued)

6. Publication IPC-7351 may have alternate designs.
7. Solder mask tolerances between and around signal pads can vary based on board fabrication site.

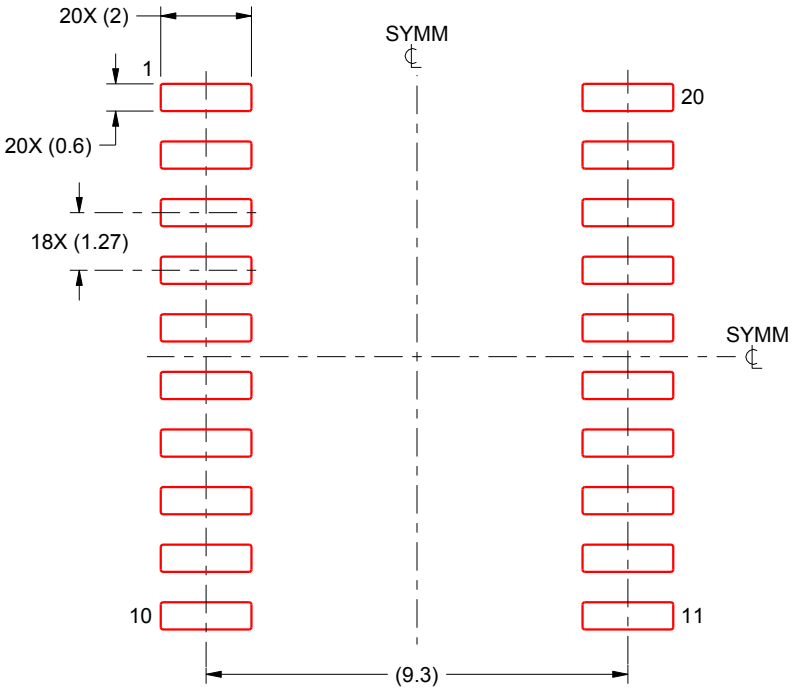

SOLDER PASTE EXAMPLE
BASED ON 0.125 mm THICK STENCIL
SCALE:6X

4220724/A 05/2016

NOTES: (continued)

8. Laser cutting apertures with trapezoidal walls and rounded corners may offer better paste release. IPC-7525 may have alternate design recommendations.
9. Board assembly site may have different recommendations for stencil design.

IMPORTANT NOTICE AND DISCLAIMER

TI PROVIDES TECHNICAL AND RELIABILITY DATA (INCLUDING DATASHEETS), DESIGN RESOURCES (INCLUDING REFERENCE DESIGNS), APPLICATION OR OTHER DESIGN ADVICE, WEB TOOLS, SAFETY INFORMATION, AND OTHER RESOURCES “AS IS” AND WITH ALL FAULTS, AND DISCLAIMS ALL WARRANTIES, EXPRESS AND IMPLIED, INCLUDING WITHOUT LIMITATION ANY IMPLIED WARRANTIES OF MERCHANTABILITY, FITNESS FOR A PARTICULAR PURPOSE OR NON-INFRINGEMENT OF THIRD PARTY INTELLECTUAL PROPERTY RIGHTS.

These resources are intended for skilled developers designing with TI products. You are solely responsible for (1) selecting the appropriate TI products for your application, (2) designing, validating and testing your application, and (3) ensuring your application meets applicable standards, and any other safety, security, or other requirements. These resources are subject to change without notice. TI grants you permission to use these resources only for development of an application that uses the TI products described in the resource. Other reproduction and display of these resources is prohibited. No license is granted to any other TI intellectual property right or to any third party intellectual property right. TI disclaims responsibility for, and you will fully indemnify TI and its representatives against, any claims, damages, costs, losses, and liabilities arising out of your use of these resources.

TI’s products are provided subject to TI’s Terms of Sale (www.ti.com/legal/termsofsale.html) or other applicable terms available either on ti.com or provided in conjunction with such TI products. TI’s provision of these resources does not expand or otherwise alter TI’s applicable warranties or warranty disclaimers for TI products.

Mailing Address: Texas Instruments, Post Office Box 655303, Dallas, Texas 75265
Copyright © 2020, Texas Instruments Incorporated