TMP814 Variable Speed Single-phase Full-wave Fan Motor Predriver

1 Features

- Predriver for Single-Phase Full-Wave Drive
  - PNP-NMOS is Used as an External Power TR, Enabling High-Efficiency Low-Consumption Drive by Means of the Low-Saturation Output and Single-Phase Full-Wave Drive (PMOS-NMOS Also Applicable)
- External PWM Input Enabling Variable Speed Control
  - Separately-Excited Upper Direct PWM (f = 25 kHz) Control Method, Enabling Highly Silent Speed Control
- Compatible with 12-V, 24-V, and 48-V Power Supplies
- Current Limiter Circuit Incorporated
  - Chopper Type Current Limit at Start
- Reactive Current Cut Circuit Incorporated
  - Reactive Current Before Phase Change is Cut to Enable Silent and Low-Consumption Drive
- Minimum Speed Setting Pin
  - Minimum Speed Can Be Set With External Resistor. Start Assistance Circuit Enables Start at Extremely Low Speed.
- Constant-Voltage Output Pin for Hall Bias
- Lock Protection and Automatic Reset Functions Incorporated
- FG (Rotation Speed Detection) and RD (Lock Detection) Output

2 Applications

- Server Fans (Up to 48 V)
- Appliance Fans (Up to 48 V)

3 Description

The TMP814 is a single-phase bipolar variable speed fan motor predriver that works with an external PWM signal. A highly efficient, quiet and low-power consumption motor driver circuit, with a large variable speed, can be implemented by adding a small number of external components.

This device is optimal for driving large scale fan motors (with large air volume and large current) such as those used in servers and consumer products.

Device Information(1)

PART NUMBER	PACKAGE	BODY SIZE (NOM)
TMP814	TSSOP (PW)	4.40 mm x 6.50 mm

(1) For all available packages, see the orderable addendum at the end of the data sheet.

Simplified Schematic

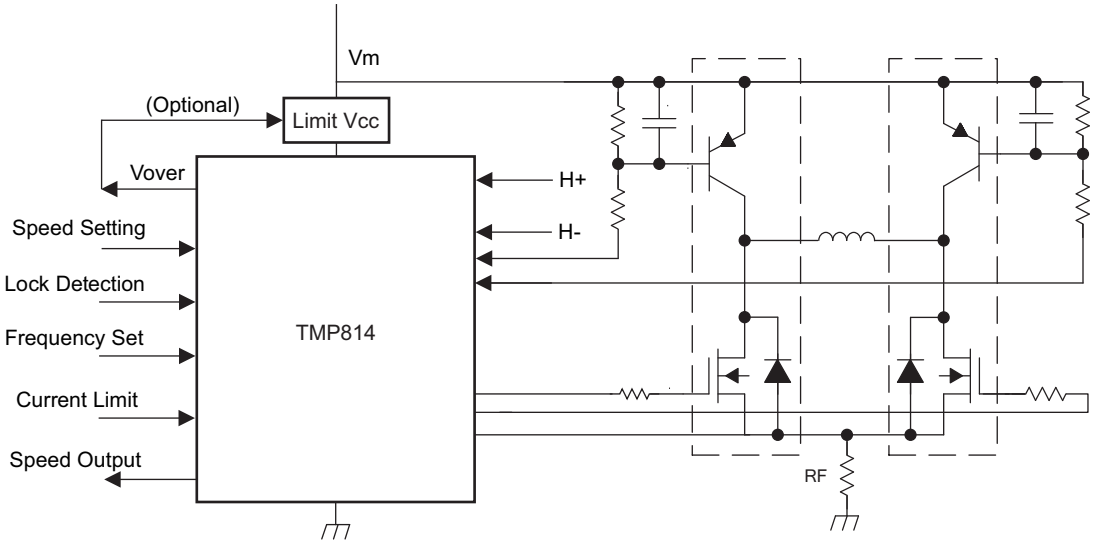

An IMPORTANT NOTICE at the end of this data sheet addresses availability, warranty, changes, use in safety-critical applications, intellectual property matters and other important disclaimers. PRODUCTION DATA.

Table of Contents

1 Features ... 1
2 Applications ... 1
3 Description ... 1
4 Revision History ... 2
5 Pin Configuration and Functions ... 3
6 Specifications ... 4
6.1 Absolute Maximum Ratings ... 4
6.2 ESD Ratings ... 4
6.3 Recommended Operating Conditions ... 4
6.4 Thermal Information ... 4
6.5 Electrical Characteristics ... 5
6.6 Typical Characteristics ... 7
7 Detailed Description ... 8
7.1 Overview ... 8
7.2 Functional Block Diagram ... 8
7.3 Feature Description ... 8
7.4 Device Functional Modes ... 10
8 Application and Implementation ... 11
8.1 Application Information ... 11
8.2 Typical Applications ... 12
9 Power Supply Recommendations ... 15
10 Layout ... 15
10.1 Layout Guidelines ... 15
10.2 Layout Example ... 15
11 Device and Documentation Support ... 16
11.1 Community Resources ... 16
11.2 Trademarks ... 16
11.3 Electrostatic Discharge Caution ... 16
11.4 Glossary ... 16
12 Mechanical, Packaging, and Orderable Information ... 16

4 Revision History

Changes from Original (May 2009) to Revision A — **Page**

- Added *ESD Ratings* table, *Feature Description* section, *Device Functional Modes*, *Application and Implementation* section, *Power Supply Recommendations* section, *Layout* section, *Device and Documentation Support* section, and *Mechanical, Packaging, and Orderable Information* section. ... 1

Copyright © 2009–2015, Texas Instruments Incorporated

5 Pin Configuration and Functions

PW Package
20-Pin TSSOP
Top View

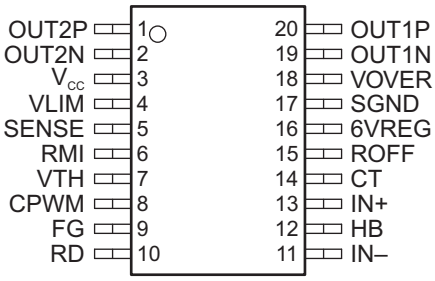

Pin Functions

PIN		I/O	DESCRIPTION
NO.	NAME		
1	OUT2P	O	Upper-side driver output
2	OUT2N	O	Lower-side driver output
3	VCC		Power supply. For the CM capacitor that is a power stabilization capacitor for PWM drive and for absorption of kickback, the capacitance of 0.1 µF to 1 µF is used. In this device, the lower TR performs current regeneration by switching the upper TR. Connect CM between V_{CC} and GND, with the thick pattern and along the shortest route. Use a zener diode if kickback causes excessive increase of the supply voltage, because such increase may damage the device.
4	VLIM	I	Activates the current limiter when SENSE voltage is greater than VLIM voltage. Connect to 6VREG when not used.
5	SENSE	I	Sense input. Connect to GND when not used.
6	RMI	I	Minimum speed setting. Connect to 6VREG when not used. If device power can be removed before power is removed from RMI, insert a current limiting resistor to prevent inflow of large current.
7	VTH	I	VTH : Connect to GND if not used (Full Speed).
8	CPWM	O	Connect to capacitor CP to set the PWM oscillation frequency. With CP = 100 pF, oscillation occurs at 25 kHz and provides the basic frequency of PWM.
9	FG	O	Open collector output, which can detect the rotation speed using the FG output according to the phase shift. Leave open when not used.
10	RD	O	Open collector output. Outputs low during rotation and high at stop. Leave open when not used.
11	IN–	I	Hall input
12	HB	O	This is a Hall element bias, that is, the 1.5-V constant-voltage output.
13	IN+	I	Hall input. Make connecting traces as short as possible to prevent carrying of noise. To futher limit noise, insert a capacitor between IN+ and IN–. The Hall input circuit is a comparator having a hysteresis of 20 mV. The application should ensure that the Hall input level more than three times (60 mVp-p) this hysteresis.
14	CT	O	Lock detection time setting. Capacitor CT is connected.
15	ROFF	I	Sets the soft switching time to cut the reactive current before phase change. Connect to 6VREG when not used.
16	6VREG	O	6-V regulator output
17	SGND		Connected to the control circuit power supply system.
18	VOVER	O	Constant-voltage bias and should be used for application of 24 V and 48 V (see Figure 7). A current limiting resistor should be used. Leave open when not used.
19	OUT1N	O	Lower-side driver output
20	OUT1P	O	Upper-side driver output

Copyright © 2009–2015, Texas Instruments Incorporated

6 Specifications

6.1 Absolute Maximum Ratings

over operating free-air temperature range (unless otherwise noted)[1]

			MIN	MAX	UNIT
V_{CC}	Supply voltage			18	V
V_{OUT}	Output voltage	OUT1P, OUT1N, OUT2P, OUT2N		18	V
I_{OUT}	Continuous output current	OUT1P, OUT1N, OUT2P, OUT2N		50	mA
I_{HB}	Continuous output current	HB		10	mA
V_{TH}	Input voltage	VTH		8	V
V_{RD} V_{FG}	Output voltage	RD, FG		18	V
I_{RD} I_{FG}	Continuous output current	RD, FG		10	mA
T_{stg}	Storage temperature		–65	150	°C

(1) Stresses beyond those listed under "absolute maximum ratings" may cause permanent damage to the device. These are stress ratings only, and functional operation of the device at these or any other conditions beyond those indicated under "recommended operating conditions" is not implied. Exposure to absolute-maximum-rated conditions for extended periods may affect device reliability.

6.2 ESD Ratings

			VALUE	UNIT
$V_{(ESD)}$	Electrostatic discharge	Human body model (HBM), per ANSI/ESDA/JEDEC JS-001, all pins[1]	±2500	V
		Charged device model (CDM), per JEDEC specification JESD22-C101, all pins[2]	±1000	

(1) JEDEC document JEP155 states that 500-V HBM allows safe manufacturing with a standard ESD control process.
(2) JEDEC document JEP157 states that 250-V CDM allows safe manufacturing with a standard ESD control process.

6.3 Recommended Operating Conditions

T_A = 25°C

			MIN	MAX	UNIT
V_{CC}	Supply voltage		6	16	V
V_{TH}	VTH input voltage	Full-speed mode	0	7	V
V_{ICM}	Hall input common phase input voltage		0.2	3	V
T_A	Operating free-air temperature		–30	95	°C

6.4 Thermal Information

THERMAL METRIC[1]		TMP814 PW (TSSOP) 20 PINS	UNIT
$R_{\theta JA}$	Junction-to-ambient thermal resistance	83	°C/W
$R_{\theta JC(top)}$	Junction-to-case (top) thermal resistance	90.6	°C/W
$R_{\theta JB}$	Junction-to-board thermal resistance	42.1	°C/W
ψ_{JT}	Junction-to-top characterization parameter	24.3	°C/W
ψ_{JB}	Junction-to-board characterization parameter	0.9	°C/W
$R_{\theta JC(bot)}$	Junction-to-case (bottom) thermal resistance	41.5	°C/W

(1) For more information about traditional and new thermal metrics, see the *Semiconductor and IC Package Thermal Metrics* application report, SPRA953.

Copyright © 2009–2015, Texas Instruments Incorporated

6.5 Electrical Characteristics

V_{CC} = 12 V, T_A = 25°C (unless otherwise noted)

PARAMETER			TEST CONDITIONS	MIN	TYP	MAX	UNIT
V_{6VREG}	Output voltage	6VREG	I_{HB} = 5 mA	5.8	6	6.15	V
V_{VOVER}	Output voltage	VOVER		12	12.8	13.6	V
V_{CRH}	High-level output voltage	CPWM		4.35	4.55	4.75	V
V_{CRL}	Low-level output voltage			1.45	1.65	1.85	V
f_{PWM}	Oscillation frequency		CP = 100 pF	18	25	32	kHz
V_{CTH}	High-level output voltage	CT		3.4	3.6	3.8	V
V_{CTL}	Low-level output voltage			1.4	1.6	1.8	V
I_{CT1}	Charge current			1.6	2	2.5	µA
I_{CT2}	Discharge current			0.16	0.2	0.28	µA
R_{CT}	Charge/discharge current ratio			8	10	12	
V_{ON}	Output voltage	OUT_N	I_O = 20 mA	4	10		V
I_{OP}	Sink current	OUT_P		15	20		mA
V_{HN}	Hall input sensitivity	H+, H-	Zero peak value (including offset and hysteresis)		10	20	mV
V_{RD} V_{FG}	Low-level output voltage	RD, FG	I_{RD} = 5 mA or I_{FG} = 5 mA		0.15	0.3	V
I_{RDL} I_{FGL}	Output leakage current		V_{RD} = 16 V or V_{FG} = 16 V			30	µA
I_{CC}	Supply current		During drive	4	10	14	mA
			During lock protection	4	10	14	

Copyright © 2009–2015, Texas Instruments Incorporated

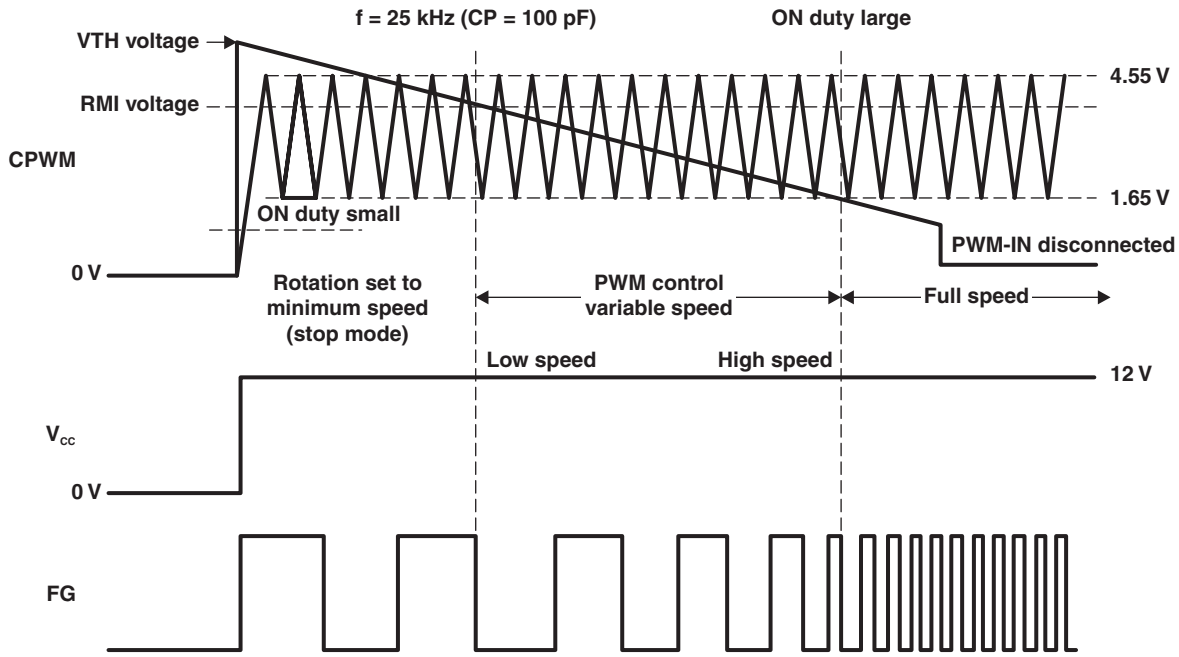

A. Minimum speed setting (stop) mode
PWM-IN input is filtered to generate the VTH voltage. At low speed, the fan rotates with the minimum speed set with RMI during low speed. If the minimum speed is not set (RMI = 6VREG), the fan stops.

B. Low ↔ high speed mode
PWM control is made through comparison of oscillation and VTH voltages with CPWM changing between 1.6 V ↔ 4.6 V.
Upper and lower TRs are turned ON when the VTH voltage is greater. The upper output TR is turned OFF when the VTH voltage is lower, and the coil current is regenerated in the lower TR. Therefore, as the VTH voltage lowers, the output ON duty increases, increasing the coil current and raising the motor speed. The rotation speed is fed back by the FG output.

C. Full speed mode
The full-speed mode becomes effective with the VTH voltage of 1.65 V or less. (VTH must be equal to GND when the speed control is not used.)

D. PWM-IN input disconnection mode
When the PWM-IN input pin is disconnected, VTH becomes 1.65 V or less and the output enables full drive at 100%. The fan runs at full speed (see Figure 3).

Figure 1. Control Timing

Copyright © 2009–2015, Texas Instruments Incorporated

6.6 Typical Characteristics

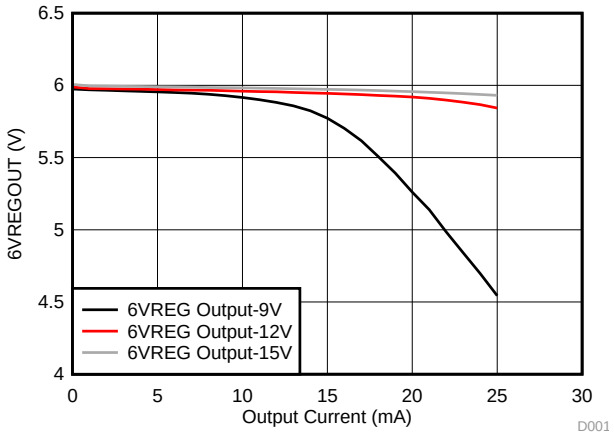

Figure 2. 6VREGOUT Load Regulation

7 Detailed Description

7.1 Overview

The TMP814 device is a single phase bipolar predriver which uses the hall sensor & speed control inputs for driving the single phase motor connected through H Bridge. The predriver outputs are designed for driving top side P-type devices and bottom side N-channel FETs in the bridge. Multiple protections like overcurrent, soft-start, speed control, lock detect, speed feedback and minimum speed are incorporated in the device. The circuit can be used for driving the 24-V or 48-V system using a VOVER pin, which protects the V_{CC} to be less than the limit of 18 V.

7.2 Functional Block Diagram

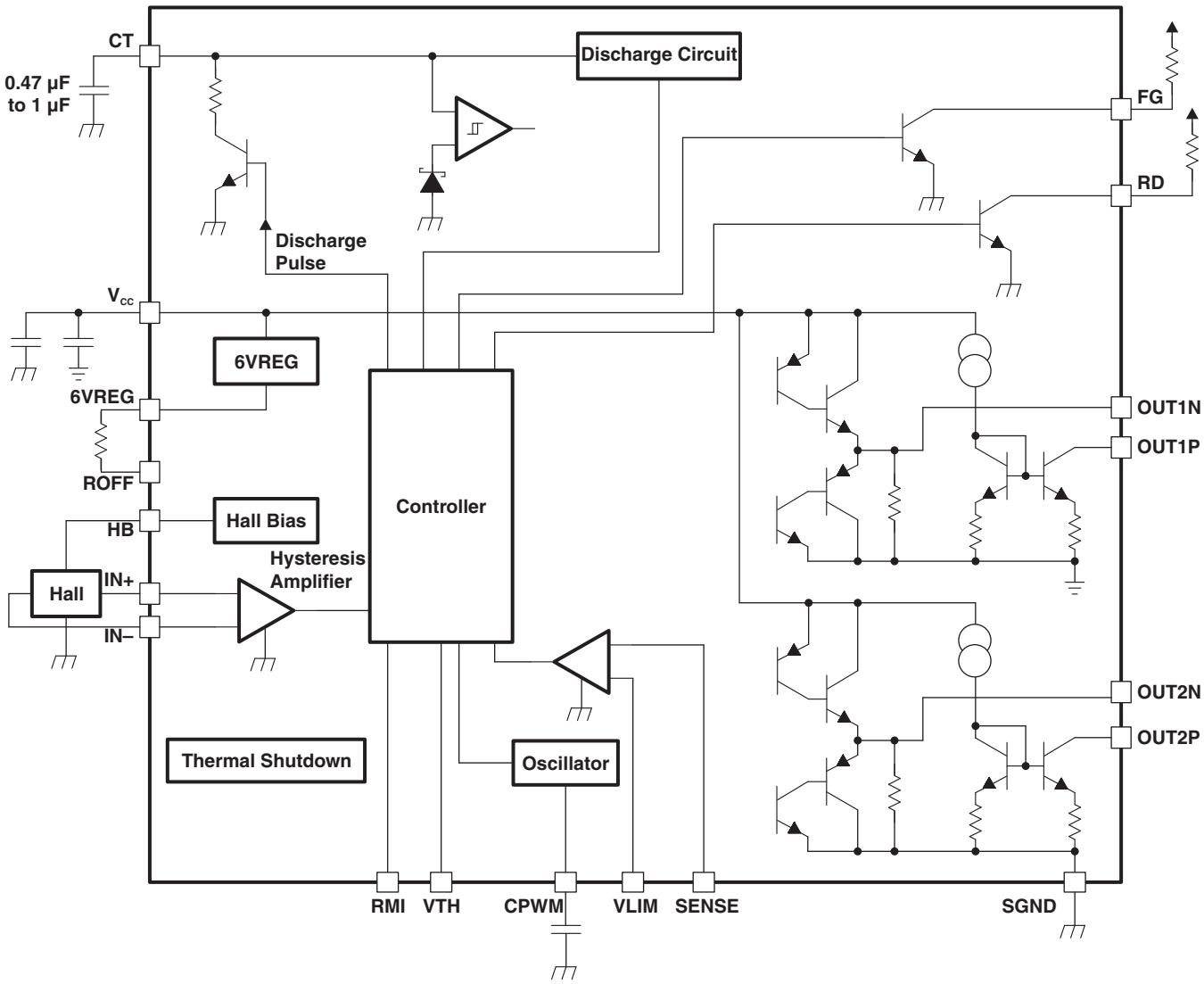

7.3 Feature Description

7.3.1 Speed Control

The speed control functionality is obtained by VTH pin of the device. For pulsed inputs user can supply a 20 kHz-100 kHz frequency input (20 kHz to 50 kHz recommended on the pin with a current limiting resistor in between. If not used, this pin needs to be connected to ground for full speed.

Copyright © 2009–2015, Texas Instruments Incorporated

Feature Description (continued)

7.3.2 Constant Voltage Bias

Constant Voltage Bias is provided through VOVER Pin. This must be used for applications of 24 V and 48 V. See Figure 3. This drive limits the V_{CC} under permissible values even when Vm > 18 V. Leave this pin open when not in use.

7.3.3 Soft-Start

Soft-Start Time can be using the ROFF pin. Connect 6 to 6VREG is not used.

7.3.4 Lock Detection

When the rotor is locked by external means or load conditions, The lock detection feature helps to protect the circuit by not allowing the current to rise beyond control. A hiccup mechanism is also provided. The lock detection is enabled by a connection to the lock detection capacitor. When the pin voltage rises to 1.2 V, the constant current charge and discharge circuits cause the drive to and enables it back when voltage reaches 0. If lock detection feature is not desired in the application, then this pin must be connected to ground.

7.3.5 Current Limit

Current limit resistor is connected in a return path of H Bridge connection. This input is connected to the SENSE pin where the Current is limited when the voltage across this resistor crosses the voltage at VLIM Pin. If not used, this pin needs to be connected to ground.

7.3.6 Minimum Speed Setting

Minimum speed setting feature is used with the RMI pin in the device. Connect to 6VREG with a pullup resistor if not used.

7.3.7 Speed Output

The speed of the motor while running can be observed at the FG pin which is an open collector output and needs to be pulled high for using it.

7.3.8 Drive Frequency Selection

The P channel switches in the device are switched with higher frequency whose duty cycle is decided by the speed control input. The frequency of the operation can be decided by the capacitor connected at the CPWM pin. As this is used also for the current limiting canceling signal, be sure to connect the capacitor even when speed control is not used.

Copyright © 2009–2015, Texas Instruments Incorporated

7.4 Device Functional Modes

Table 1. Truth Table(1)

IN–	IN+	CT	OUT1P	OUT1N	OUT2P	OUT2N	FG	RD	MODE
H	L	L	L	–	–	H	L	L	OUT1 → 2 drive
L	H		–	H	L	–	OFF		OUT2 → 1 drive
H	L	H	OFF	–	–	H	L	OFF	Lock protection
L	H		–	H	OFF	–	OFF		

(1) During full-speed rotation

VTH	CPWM	IN–	IN+	OUT1P	OUT1N	OUT2P	OUT2N	MODE
L	H	H	L	L	–	–	H	OUT1 → 2 Drive
		L	H	–	H	L	–	OUT2 → 1 Drive
H	L	H	L	OFF	–	–	H	During rotation, regeneration in lower TR
		L	H	–	H	OFF	–	

Copyright © 2009–2015, Texas Instruments Incorporated

8 Application and Implementation

NOTE

Information in the following applications sections is not part of the TI component specification, and TI does not warrant its accuracy or completeness. TI's customers are responsible for determining suitability of components for their purposes. Customers should validate and test their design implementation to confirm system functionality.

8.1 Application Information

The TMP814 device requires few external components for the features described in *Feature Description*. The device needs a 1-uF or more capacitor connected at VCC. The device generates 6-V regulated output which can be used for pullups in the circuit as well as the Hall sensor.

8.2 Typical Applications

8.2.1 12-V Sample Application Circuit

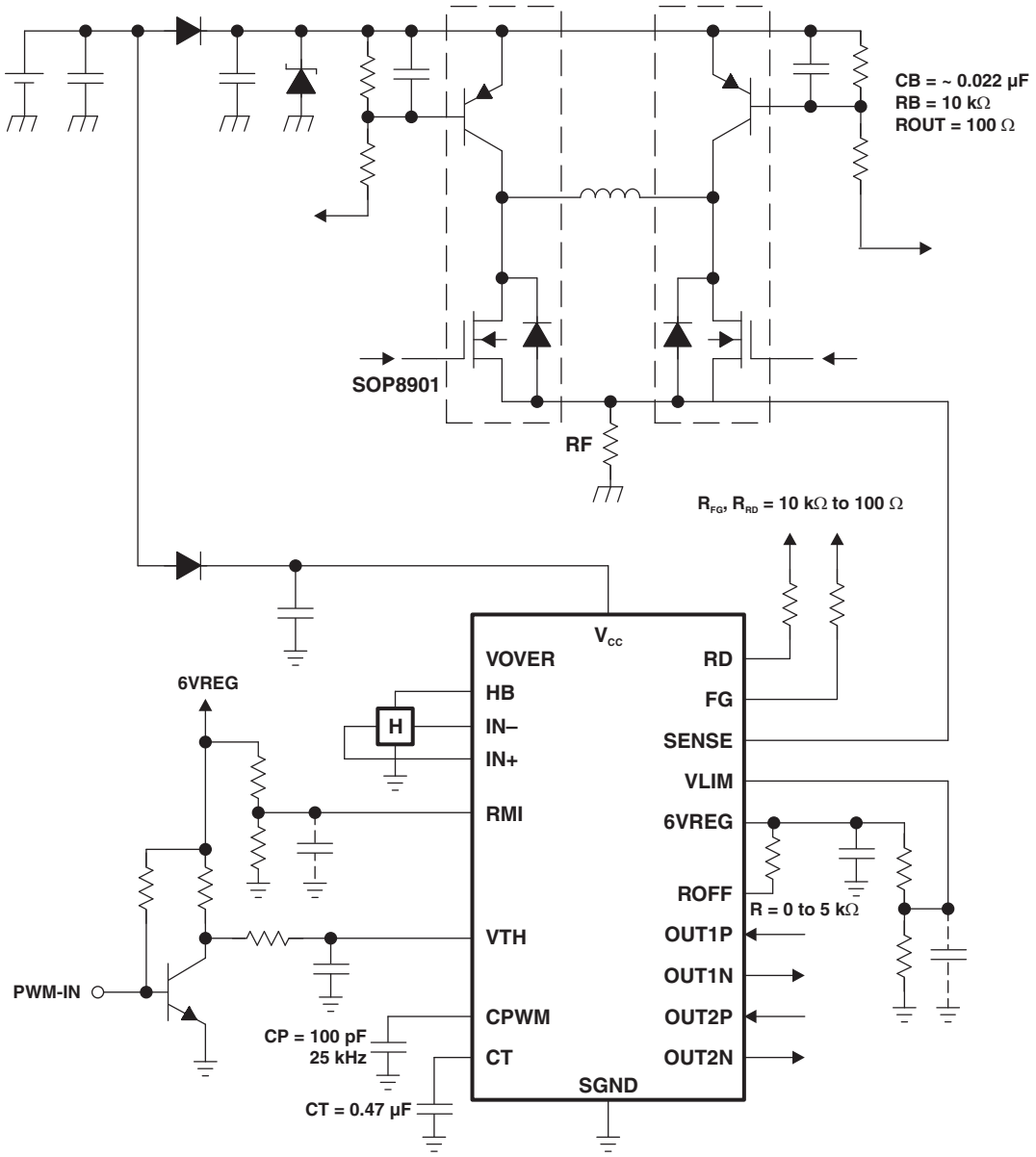

Figure 3. 12-V Sample Application Circuit

8.2.1.1 Design Requirements

Input Voltage: 6 to 16 V

VCC capacitor: 1 uF or more

H Bridge top side: P-channel FETs

H Bridge bottom side: N-channel FETs

8.2.1.2 Detailed Design Procedure

Pins:

- CPWM Capacitor: 100 pF for 25 kHz switching or appropriate.

Copyright © 2009–2015, Texas Instruments Incorporated

Typical Applications (continued)

- VTH Pin connected to Ground for Full speed or supplied with pulsed input.
- RMI Pin Pulled high to 6VREG output or external connection if required.
- ROFF pulled to 6VREG.
- 6VREG connected to Hall Sensor. Hall sensor differential inputs connected to IN+ and IN-.
- SENSE pin or GND.
- CT connected to Lock Detection capacitor (0.47uF or calculated values)or to GND.
- Drive outputs connected to the Gates of the H bridge switches.
- Pullup on FG.
- VLIM and VOVER kept open.

Power Supply:

- Make sure the power supply has set with sufficient current limit at the decided at the motor voltage.

Build the circuit with previously recommended connections at the pins.

Test the motor circuit with hardware connected to it.

8.2.1.3 Application Curves

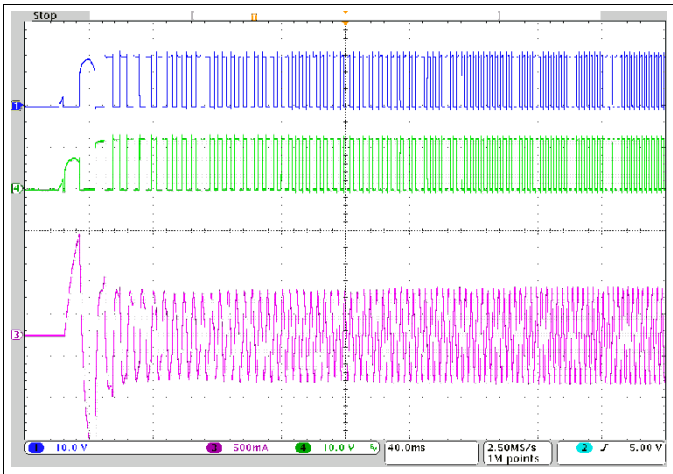

Figure 4. Start-up at 12 V

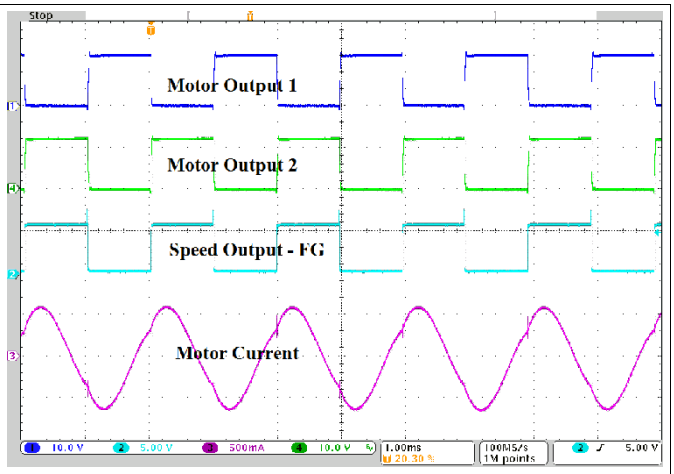

Figure 5. Motor Outputs and Phase Current at 100% Duty Cycle

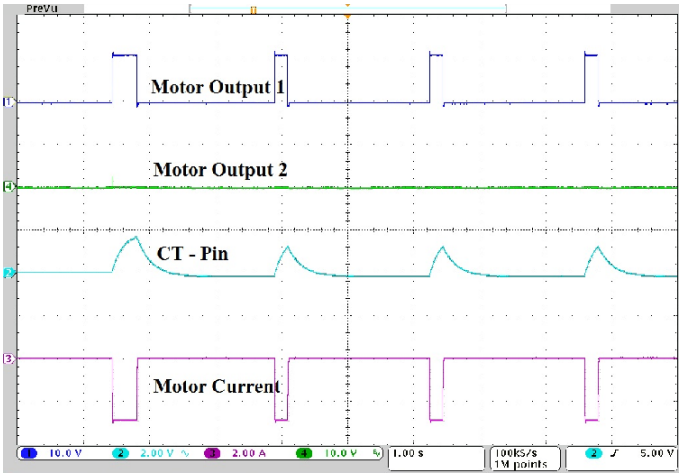

Figure 6. Lock Detection Waveform

Typical Applications (continued)

8.2.2 24-V/48-V Sample Application Circuit

The device can be used for Vm >Vcc (that is, 24/48 V). The VOVER pin and associated circuit help keep V_{CC} of the device below the V_{CC} limits of the device, allowing Vm to go at 24/48V.

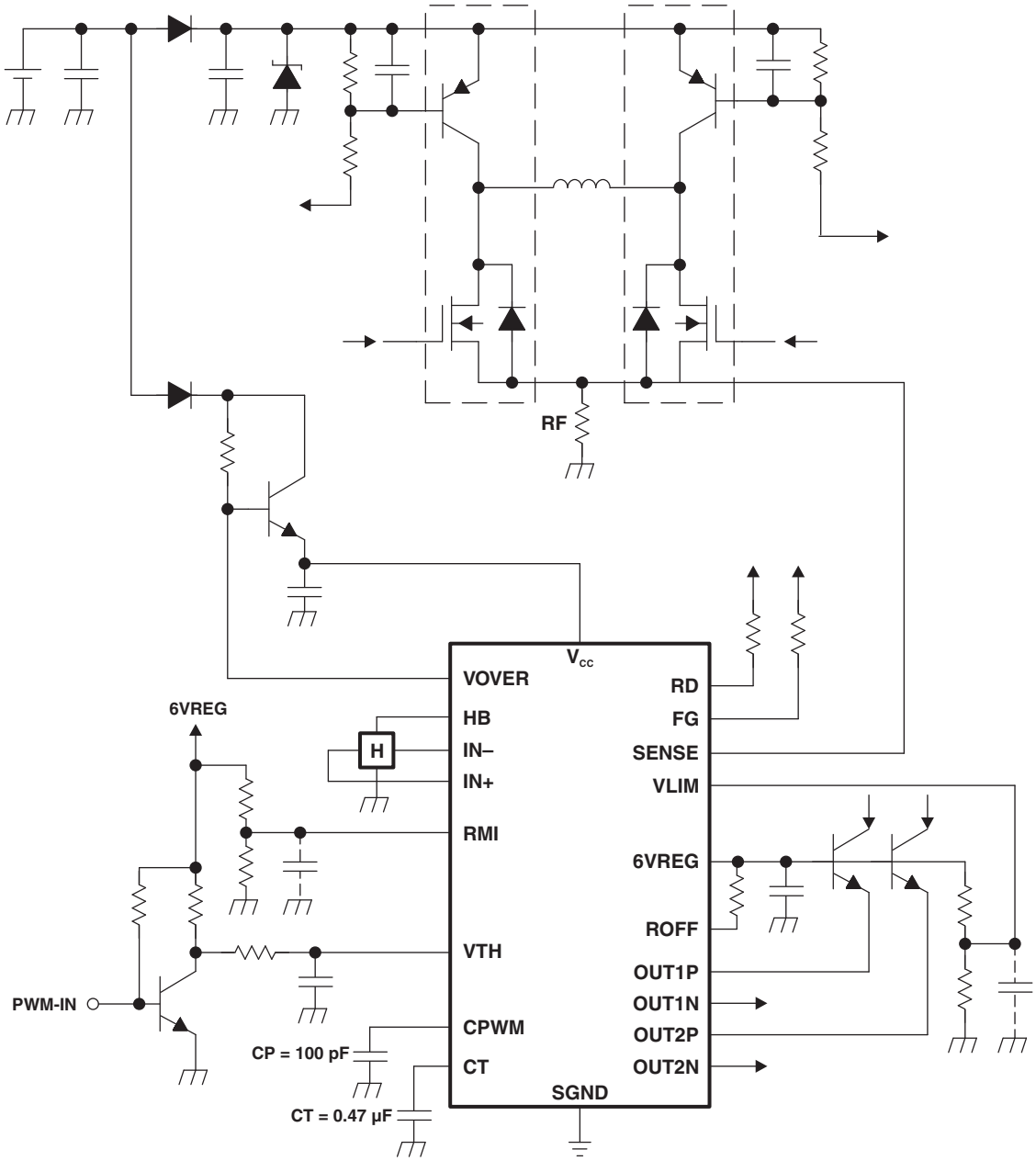

Figure 7. 24-V/48-V Sample Application Circuit

Copyright © 2009–2015, Texas Instruments Incorporated

9 Power Supply Recommendations

For testing purposes, a current limited source can be connected with voltage from 6 V to 16 V on printed-circuit-board. Use a 1-µF capacitor (minimum) to take care of load transient requirements.

10 Layout

10.1 Layout Guidelines

Connect a minimum of 1-µF or greater capacitor close to the power supply pins. Connect other capacitors and resistors according to the calculations (for example, the pullup resistors should be connected at various pins, the c capacitors should be connected at lock detect, and so forth.)

10.2 Layout Example

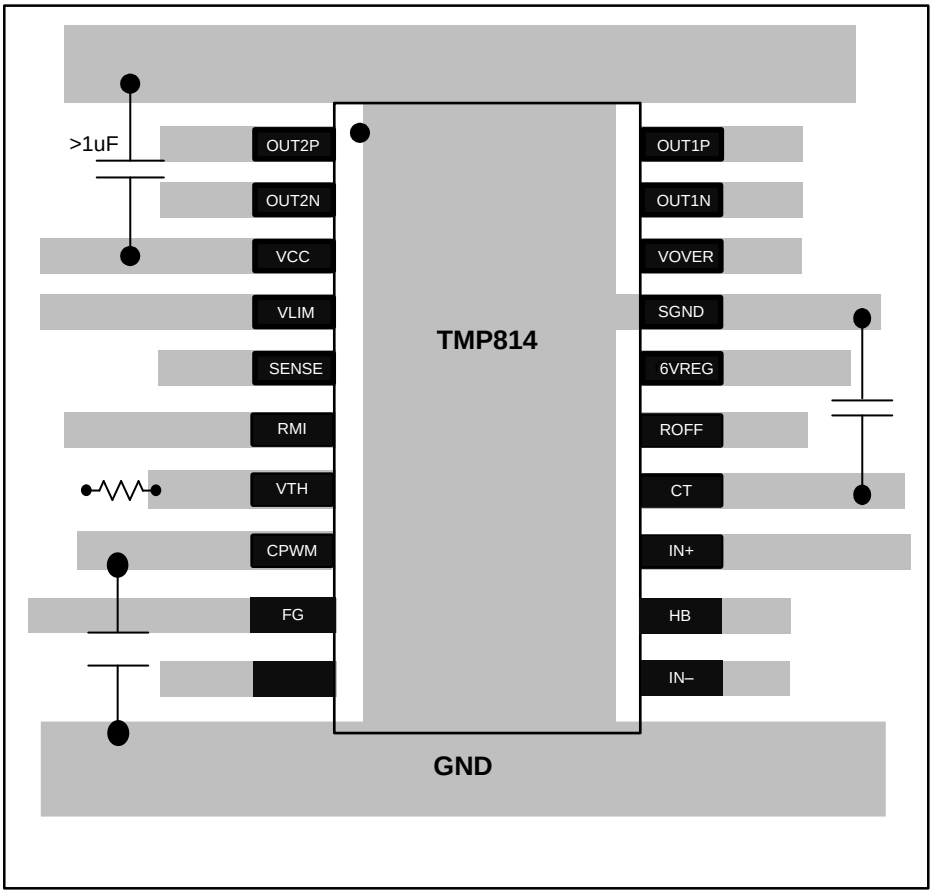

Figure 8. Recommended Layout

11 Device and Documentation Support

11.1 Community Resources

The following links connect to TI community resources. Linked contents are provided "AS IS" by the respective contributors. They do not constitute TI specifications and do not necessarily reflect TI's views; see TI's Terms of Use.

TI E2E™ Online Community ***TI's Engineer-to-Engineer (E2E) Community.*** Created to foster collaboration among engineers. At e2e.ti.com, you can ask questions, share knowledge, explore ideas and help solve problems with fellow engineers.

Design Support ***TI's Design Support*** Quickly find helpful E2E forums along with design support tools and contact information for technical support.

11.2 Trademarks

E2E is a trademark of Texas Instruments.
All other trademarks are the property of their respective owners.

11.3 Electrostatic Discharge Caution

These devices have limited built-in ESD protection. The leads should be shorted together or the device placed in conductive foam during storage or handling to prevent electrostatic damage to the MOS gates.

11.4 Glossary

SLYZ022 — *TI Glossary*.

This glossary lists and explains terms, acronyms, and definitions.

12 Mechanical, Packaging, and Orderable Information

The following pages include mechanical, packaging, and orderable information. This information is the most current data available for the designated devices. This data is subject to change without notice and revision of this document. For browser-based versions of this data sheet, refer to the left-hand navigation.

Copyright © 2009–2015, Texas Instruments Incorporated

TAPE AND REEL INFORMATION

REEL DIMENSIONS

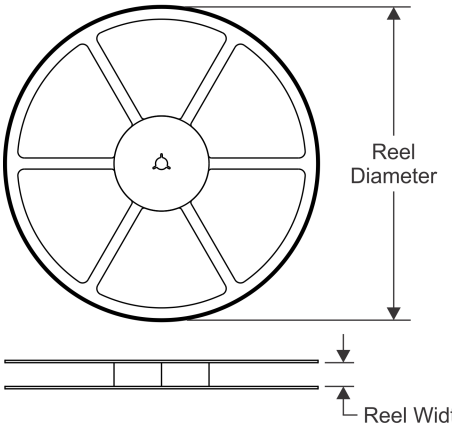

TAPE DIMENSIONS

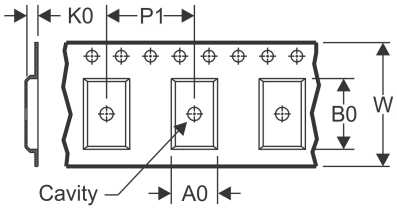

A0	Dimension designed to accommodate the component width
B0	Dimension designed to accommodate the component length
K0	Dimension designed to accommodate the component thickness
W	Overall width of the carrier tape
P1	Pitch between successive cavity centers

QUADRANT ASSIGNMENTS FOR PIN 1 ORIENTATION IN TAPE

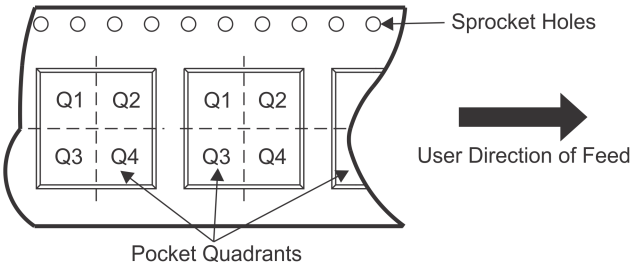

*All dimensions are nominal

Device	Package Type	Package Drawing	Pins	SPQ	Reel Diameter (mm)	Reel Width W1 (mm)	A0 (mm)	B0 (mm)	K0 (mm)	P1 (mm)	W (mm)	Pin1 Quadrant
TMP814PWR	TSSOP	PW	20	2000	330.0	16.4	6.95	7.1	1.6	8.0	16.0	Q1

TAPE AND REEL BOX DIMENSIONS

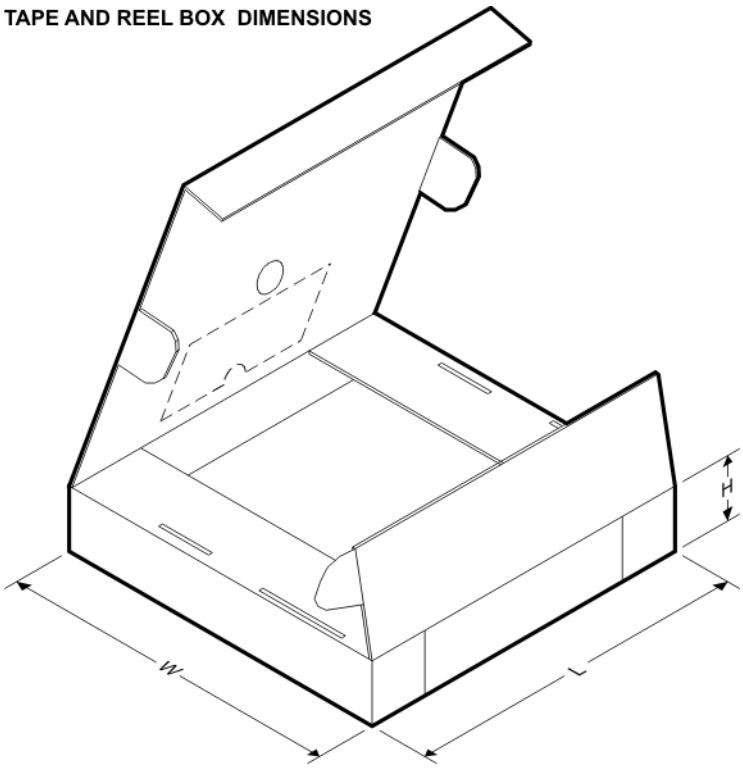

*All dimensions are nominal

Device	Package Type	Package Drawing	Pins	SPQ	Length (mm)	Width (mm)	Height (mm)
TMP814PWR	TSSOP	PW	20	2000	367.0	367.0	38.0

PW (R-PDSO-G20) PLASTIC SMALL OUTLINE

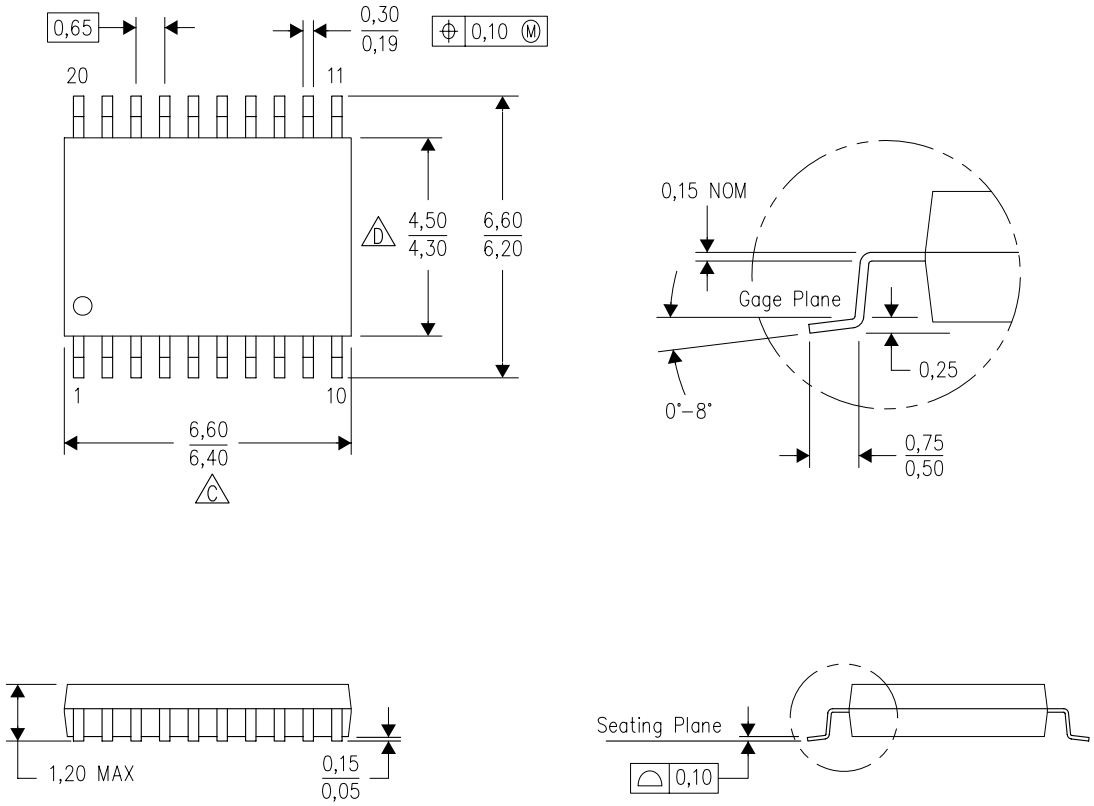

4040064-5/G 02/11

NOTES:
A. All linear dimensions are in millimeters. Dimensioning and tolerancing per ASME Y14.5M-1994.
B. This drawing is subject to change without notice.
C. Body length does not include mold flash, protrusions, or gate burrs. Mold flash, protrusions, or gate burrs shall not exceed 0,15 each side.
D. Body width does not include interlead flash. Interlead flash shall not exceed 0,25 each side.
E. Falls within JEDEC MO-153

PW (R–PDSO–G20) PLASTIC SMALL OUTLINE

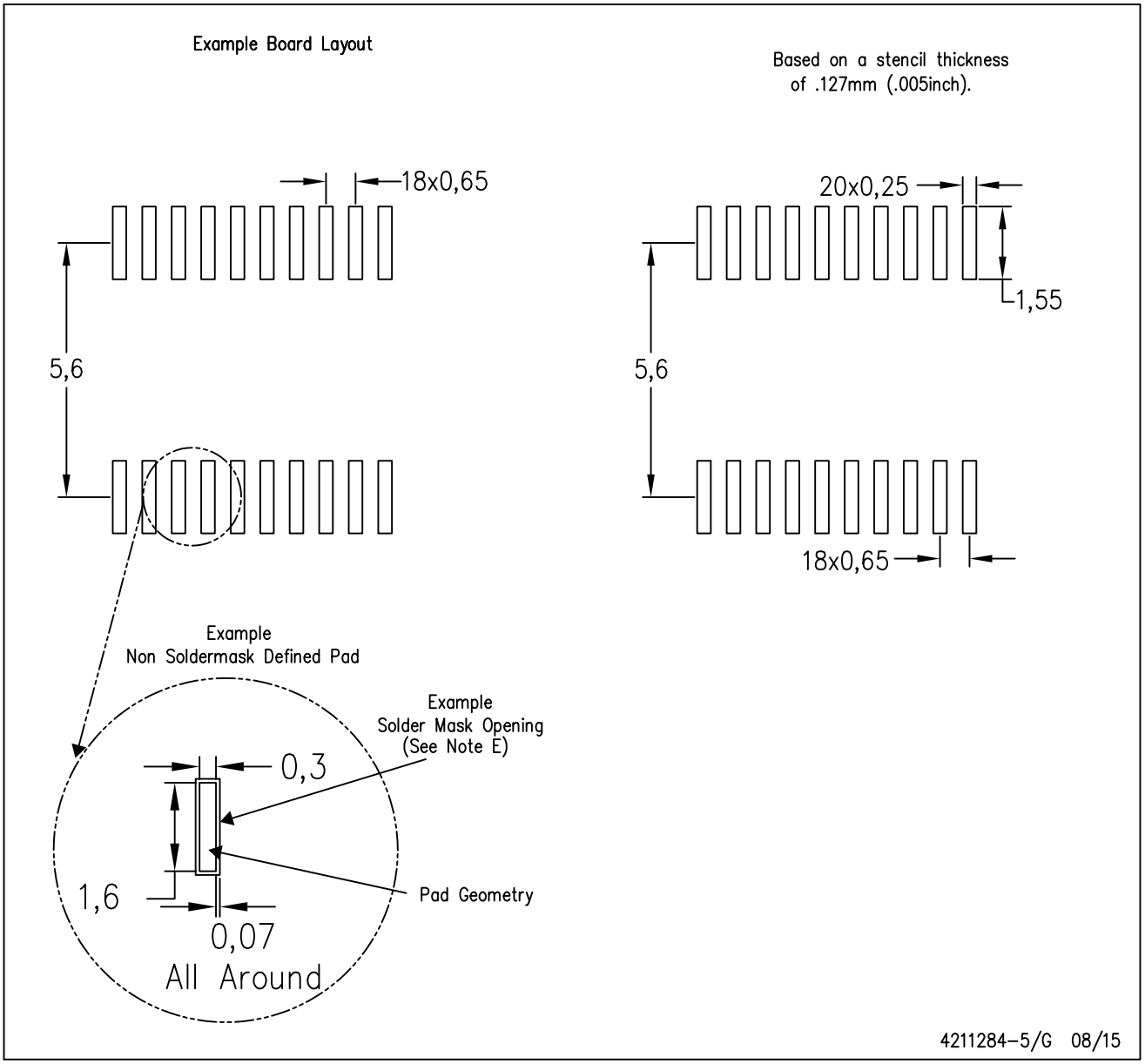

NOTES:
A. All linear dimensions are in millimeters.
B. This drawing is subject to change without notice.
C. Publication IPC–7351 is recommended for alternate design.
D. Laser cutting apertures with trapezoidal walls and also rounding corners will offer better paste release. Customers should contact their board assembly site for stencil design recommendations. Refer to IPC–7525 for other stencil recommendations.
E. Customers should contact their board fabrication site for solder mask tolerances between and around signal pads.

IMPORTANT NOTICE

Texas Instruments Incorporated and its subsidiaries (TI) reserve the right to make corrections, enhancements, improvements and other changes to its semiconductor products and services per JESD46, latest issue, and to discontinue any product or service per JESD48, latest issue. Buyers should obtain the latest relevant information before placing orders and should verify that such information is current and complete. All semiconductor products (also referred to herein as “components”) are sold subject to TI’s terms and conditions of sale supplied at the time of order acknowledgment.

TI warrants performance of its components to the specifications applicable at the time of sale, in accordance with the warranty in TI’s terms and conditions of sale of semiconductor products. Testing and other quality control techniques are used to the extent TI deems necessary to support this warranty. Except where mandated by applicable law, testing of all parameters of each component is not necessarily performed.

TI assumes no liability for applications assistance or the design of Buyers’ products. Buyers are responsible for their products and applications using TI components. To minimize the risks associated with Buyers’ products and applications, Buyers should provide adequate design and operating safeguards.

TI does not warrant or represent that any license, either express or implied, is granted under any patent right, copyright, mask work right, or other intellectual property right relating to any combination, machine, or process in which TI components or services are used. Information published by TI regarding third-party products or services does not constitute a license to use such products or services or a warranty or endorsement thereof. Use of such information may require a license from a third party under the patents or other intellectual property of the third party, or a license from TI under the patents or other intellectual property of TI.

Reproduction of significant portions of TI information in TI data books or data sheets is permissible only if reproduction is without alteration and is accompanied by all associated warranties, conditions, limitations, and notices. TI is not responsible or liable for such altered documentation. Information of third parties may be subject to additional restrictions.

Resale of TI components or services with statements different from or beyond the parameters stated by TI for that component or service voids all express and any implied warranties for the associated TI component or service and is an unfair and deceptive business practice. TI is not responsible or liable for any such statements.

Buyer acknowledges and agrees that it is solely responsible for compliance with all legal, regulatory and safety-related requirements concerning its products, and any use of TI components in its applications, notwithstanding any applications-related information or support that may be provided by TI. Buyer represents and agrees that it has all the necessary expertise to create and implement safeguards which anticipate dangerous consequences of failures, monitor failures and their consequences, lessen the likelihood of failures that might cause harm and take appropriate remedial actions. Buyer will fully indemnify TI and its representatives against any damages arising out of the use of any TI components in safety-critical applications.

In some cases, TI components may be promoted specifically to facilitate safety-related applications. With such components, TI’s goal is to help enable customers to design and create their own end-product solutions that meet applicable functional safety standards and requirements. Nonetheless, such components are subject to these terms.

No TI components are authorized for use in FDA Class III (or similar life-critical medical equipment) unless authorized officers of the parties have executed a special agreement specifically governing such use.

Only those TI components which TI has specifically designated as military grade or “enhanced plastic” are designed and intended for use in military/aerospace applications or environments. Buyer acknowledges and agrees that any military or aerospace use of TI components which have ***not*** been so designated is solely at the Buyer's risk, and that Buyer is solely responsible for compliance with all legal and regulatory requirements in connection with such use.

TI has specifically designated certain components as meeting ISO/TS16949 requirements, mainly for automotive use. In any case of use of non-designated products, TI will not be responsible for any failure to meet ISO/TS16949.

Products		**Applications**	
Audio	www.ti.com/audio	Automotive and Transportation	www.ti.com/automotive
Amplifiers	amplifier.ti.com	Communications and Telecom	www.ti.com/communications
Data Converters	dataconverter.ti.com	Computers and Peripherals	www.ti.com/computers
DLP® Products	www.dlp.com	Consumer Electronics	www.ti.com/consumer-apps
DSP	dsp.ti.com	Energy and Lighting	www.ti.com/energy
Clocks and Timers	www.ti.com/clocks	Industrial	www.ti.com/industrial
Interface	interface.ti.com	Medical	www.ti.com/medical
Logic	logic.ti.com	Security	www.ti.com/security
Power Mgmt	power.ti.com	Space, Avionics and Defense	www.ti.com/space-avionics-defense
Microcontrollers	microcontroller.ti.com	Video and Imaging	www.ti.com/video
RFID	www.ti-rfid.com		
OMAP Applications Processors	www.ti.com/omap	**TI E2E Community**	e2e.ti.com
Wireless Connectivity	www.ti.com/wirelessconnectivity		

Mailing Address: Texas Instruments, Post Office Box 655303, Dallas, Texas 75265
Copyright © 2015, Texas Instruments Incorporated