LVPECL AND LVDS REPEATER/TRANSLATOR WITH ENABLE

FEATURES

- **Low-Voltage PECL Input and Low-Voltage PECL or LVDS Outputs**
- **Signaling Rates to 4 Gbps or Clock Rates to 2 GHz**
  - **120-ps Output Transition Times**
  - **Less than 45 ps Total Jitter**
  - **Less than 630 ps Propagation Delay Times**
- **2.5-V or 3.3-V Supply Operation**
- **2-mm x 2-mm Small-Outline No-Lead Package**

APPLICATIONS

- **PECL-to-LVDS Translation**
- **Data or Clock Signal Amplification**

DESCRIPTION

The SN65LVDS20 and SN65LVP20 are a high-speed differential receiver and driver connected as a repeater. The receiver accepts low-voltage positive-emitter-coupled logic (PECL) at signaling rates up to 4 Gbps and repeats it as either an LVDS or PECL output signal. The signal path through the device is differential for low radiated emissions and minimal added jitter.

The outputs of the SN65LVDS20 are LVDS levels as defined by TIA/EIA-644-A. The outputs of the SN65LVDP20 are compatible with low-voltage PECL levels. A low-level input to $\overline{EN}$ enables the outputs. A high-level input puts the output into a high-impedance state. Both outputs are designed to drive differential transmission lines with nominally 100-Ω characteristic impedance.

Both devices provide a voltage reference (V_{BB}) of typically 1.35 V below V_{CC} for use in receiving single-ended PECL input signals. When not used, V_{BB} should be unconnected or open.

All devices are characterized for operation from -40°C to 85°C.

FUNCTION DIAGRAM

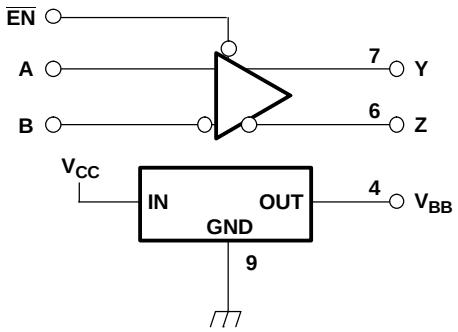

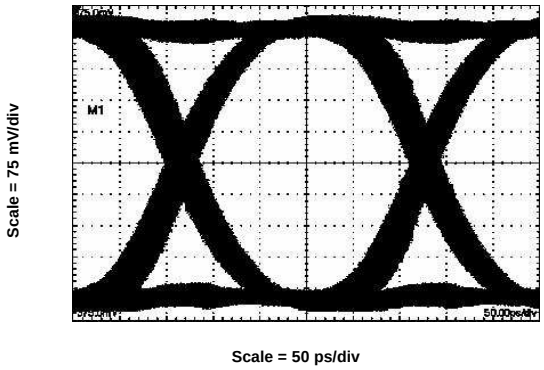

Figure 1. SN65LVDS20 Output Eye Pattern With 4-Gbps PRBS Input

Please be aware that an important notice concerning availability, standard warranty, and use in critical applications of Texas Instruments semiconductor products and disclaimers thereto appears at the end of this data sheet.

PRODUCTION DATA information is current as of publication date. Products conform to specifications per the terms of the Texas Instruments standard warranty. Production processing does not necessarily include testing of all parameters.

Copyright © 2004–2005, Texas Instruments Incorporated

These devices have limited built-in ESD protection. The leads should be shorted together or the device placed in conductive foam during storage or handling to prevent electrostatic damage to the MOS gates.

AVAILABLE OPTIONS[1]

INPUT	OUTPUT	PART NUMBER	PART MARKING
Differential	LVDS	SN65LVDS20	E8
Differential	LVPECL	SN65LVP20	E7

(1) For the most current package and ordering information, see the Package Option Addendum at the end of this document, or see the TI website at www.ti.com.

ABSOLUTE MAXIMUM RATINGS

over operating free-air temperature range (unless otherwise noted) [1]

		UNIT
V_{CC}	Supply voltage [2]	-0.5 V to 4 V
V_I	Input voltage	-0.5 V to V_{CC} + 0.5 V
V_O	Output voltage	-0.5 V to V_{CC} + 0.5 V
I_O	V_{BB} output current	±0.5 mA
	HBM electrostatic discharge[3]	±3 kV
	CDM electrostatic discharge[4]	±1500 V
	Continuous power dissipation	See Power Dissipation Ratings Table

(1) Stresses beyond those listed under "absolute maximum ratings" may cause permanent damage to the device. These are stress ratings only and functional operation of the device at these or any other conditions beyond those indicated under "recommended operating conditions" is not implied. Exposure to absolute-maximum-rated conditions for extended periods may affect device reliability.
(2) All voltage values, except differential voltages, are with respect to network ground (see Figure 2).
(3) Tested in accordance with JEDEC Standard 22, Test Method A114-A-7
(4) Tested in accordance with JEDEC Standard 22, Test Method C101

DISSIPATION RATINGS

PACKAGE	T_A < 25°C POWER RATING	OPERATING FACTOR ABOVE T_A = 25°C	T_A = 85°C POWER RATING
DRF	403 mW	4.0 mW/°C	161 mW

RECOMMENDED OPERATING CONDITIONS

		MIN	NOM	MAX	UNIT
V_{CC}	Supply Voltage	2.375	2.5 or 3.3	3.6	V
V_{IC}	Common-mode input voltage $(V_{IA} + V_{IB})/2$	1.2		$V_{CC} - (V_{ID}/2)$	V
$\|V_{ID}\|$	Differential input voltage magnitude, $\|V_{IA} - V_{IB}\|$	0.08		1	V
V_{IH}	High-level input voltage, $\overline{EN}$	2		V_{CC}	V
V_{IL}	Low-level input voltage, $\overline{EN}$	0		0.8	V
I_O	Output current to V_{BB}	-400[1]		400	µA
R_L	Differential load resistance	90		132	Ω
T_A	Operating free-air temperature	-40		85	°C

(1) The algebraic convention, where the least positive (more negative) value is designated minimum, is used in this data sheet.

ELECTRICAL CHARACTERISTICS

over recommended operating conditions (unless otherwise noted)

PARAMETER		TEST CONDITIONS	MIN	TYP(1)	MAX	UNIT
I_{CC}	Supply current	R_L = 100 Ω, $\overline{EN}$ at 0 V, Other inputs open		35	45	mA
		Outputs unloaded, $\overline{EN}$ at 0 V, Other inputs open		19	24	
P_D	Device power dissipation, SN65LVDS20	R_L = 100 Ω, $\overline{EN}$ at 0 V, 2-GHz 50%-duty-cycle square-wave input		116	160	mW
	Device power dissipation, SN65LVP20	50 Ω from Y and Z to V_{CC} - 2 V, $\overline{EN}$ at 0 V, 2-GHz 50%-duty-cycle square-wave input		63	86	
V_{BB}	Reference voltage	I_{BB} = ±400 µA	V_{CC} - 1.44	V_{CC} - 1.35	V_{CC} - 1.25	V
I_{IH}	High-level input current, $\overline{EN}$	V_I = 2 V	-20		20	µA
I_{IAH} or I_{IBH}	High-level input current, A or B	$V_I = V_{CC}$	-20		20	
I_{IL}	Low-level input current, $\overline{EN}$	V_I = 0.8 V	-20		20	
I_{IAL} or I_{IBL}	Low-level input current, A or B	V_I = GND	-20		20	
SN65LVDS20 OUTPUT CHARACTERISTICS (see Figure 2)						
$\|V_{OD}\|$	Differential output voltage magnitude, $\|V_{OY} - V_{OZ}\|$	See Figure 2	247	340	454	mV
$\Delta\|V_{OD}\|$	Change in differential output voltage magnitude between logic states				50	
$V_{OC(SS)}$	Steady-state common-mode output voltage (see Figure 3)		1.125		1.375	V
$\Delta V_{OC(SS)}$	Change in steady-state common-mode output voltage between logic states	See Figure 3	-50		50	mV
$V_{OC(PP)}$	Peak-to-peak common-mode output voltage			50	100	
I_{OYZ} or I_{OZZ}	High-impedance output current	$\overline{EN}$ at V_{CC}, V_O = 0 V or V_{CC}	-1		1	µA
I_{OYS} or I_{OZS}	Short-circuit output current	$\overline{EN}$ at 0 V, V_{OY} or V_{OZ} = 0 V	-62		62	mA
$I_{OS(D)}$	Differential short-circuit output current, $\|I_{OY} - I_{OZ}\|$	$\overline{EN}$ at 0 V, $V_{OY} = V_{OZ}$	-12		12	
SN65LVP20 OUTPUT CHARACTERISTICS (see Figure 2)						
V_{OYH} or V_{OZH}	High-level output voltage	3.3 V; 50 Ω from Y and Z to V_{CC} - 2 V	V_{CC} - 1.05		V_{CC} - 0.82	V
V_{OYL} or V_{OZL}	Low-level output voltage		V_{CC} - 1.83		V_{CC} - 1.57	
V_{OYL} or V_{OZL}	Low-level output voltage	2.5 V; 50 Ω from Y and Z to V_{CC} - 2 V	V_{CC} - 1.88		V_{CC} - 1.57	
$\|V_{OD}\|$	Differential output voltage magnitude, $\|V_{OH} - V_{OL}\|$		0.6	0.8	1	
I_{OYZ} or I_{OZZ}	High-impedance output current	$\overline{EN}$ at V_{CC}, V_O = 0 V or V_{CC}	-1		1	µA

(1) Typical values are at room temperature and with a V_{CC} of 3.3 V.

SWITCHING CHARACTERISTICS

over recommended operating conditions (unless otherwise noted)

PARAMETER		TEST CONDITIONS	MIN	TYP(1)	MAX	UNIT
t_{PLH}	Differential propagation delay time, low-to-high-level output	See Figure 2 and Figure 4	300	450	630	ps
t_{PHL}	Differential propagation delay time, high-level-to-low-level output	See Figure 2 and Figure 4	300	450	630	ps
$t_{SK(P)}$	Pulse skew, $\|t_{PLH} - t_{PHL}\|$	See Figure 2 and Figure 4			20	ps
$t_{SK(PP)}$	Part-to-part skew (2)	V_{CC} = 3.3 V			80	ps
		V_{CC} = 2.5 V			130	ps
t_r	20%-to-80% differential signal rise time	LVDS, See Figure 2 and Figure 4		85	115	ps
		LVPECL, See Figure 2 and Figure 4		92	120	ps
t_f	20%-to-80% differential signal fall time	LVDS, See Figure 2 and Figure 4		85	115	ps
		LVPECL, See Figure 2 and Figure 4		92	120	ps
$t_{jit(per)}$	RMS period jitter(3)	2-GHz 50%-duty-cycle square-wave input, See Figure 5		2	3	ps
$t_{jit(cc)}$	Peak cycle-to-cycle jitter (4)	2-GHz 50%-duty-cycle square-wave input, See Figure 5		13	16	ps
$t_{jit(p-p)}$	Peak-to-peak jitter	LVDS; 4 Gbps PRBS, 2^{23}- 1 run length, See Figure 5		37	45	ps
$t_{jit(ph)}$	Intrinsic phase jitter	155.52 MHz		0.62		ps
		622.08 MHz		0.14		ps
t_{PHZ}	Propagation delay time, high-level-to-high-impedance output	See Figure 2 and Figure 6			30	ns
t_{PLZ}	Propagation delay time, low-level-to-high-impedance output	See Figure 2 and Figure 6			30	ns
t_{PZH}	Propagation delay time, high-impedance-to-high-level output	See Figure 2 and Figure 6			30	ns
t_{PZL}	Propagation delay time, high-impedance-to-low-level output	See Figure 2 and Figure 6			30	ns

(1) Typical values are at room temperature and with a V_{CC} of 3.3 V.
(2) Part-to-part skew is the magnitude of the difference in propagation delay times between any specified terminals of two devices when both devices operate with the same supply voltages, at the same temperature, and have identical packages and test circuits.
(3) Period jitter is the deviation in cycle time of a signal with respect to the ideal period over a random sample of 100,000 cycles.
(4) Cycle-to-cycle jitter is the variation in cycle time of a signal between adjacent cycles, over a random sample of 1,000 adjacent cycle pairs.

PARAMETER MEASUREMENT INFORMATION

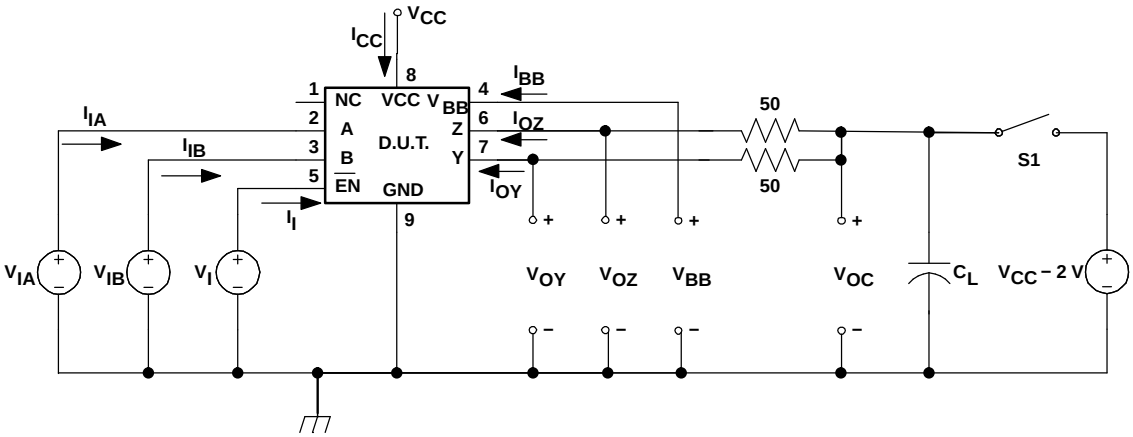

(1) C_L is the instrumentation and test fixture capacitance.

(2) S1 is open for the SN65LVDS20 and closed for the SN65LVP20.

Figure 2. Output Voltage Test Circuit and Voltage and Current Definitions

PARAMETER MEASUREMENT INFORMATION (continued)

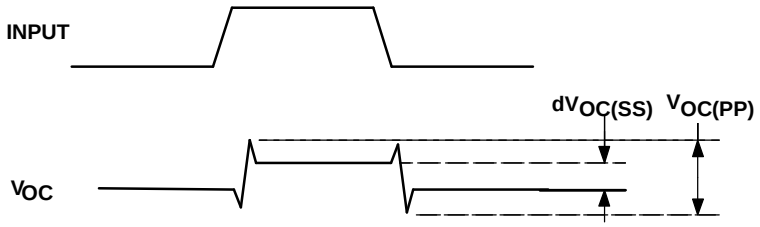

Figure 3. V_{OC} Definitions

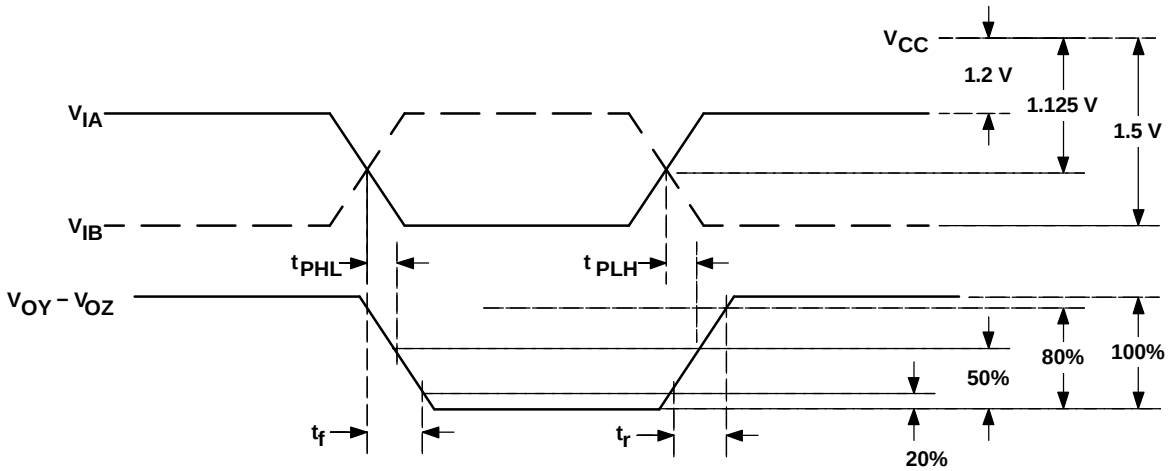

Figure 4. Propagation Delay and Transition Time Test Waveforms

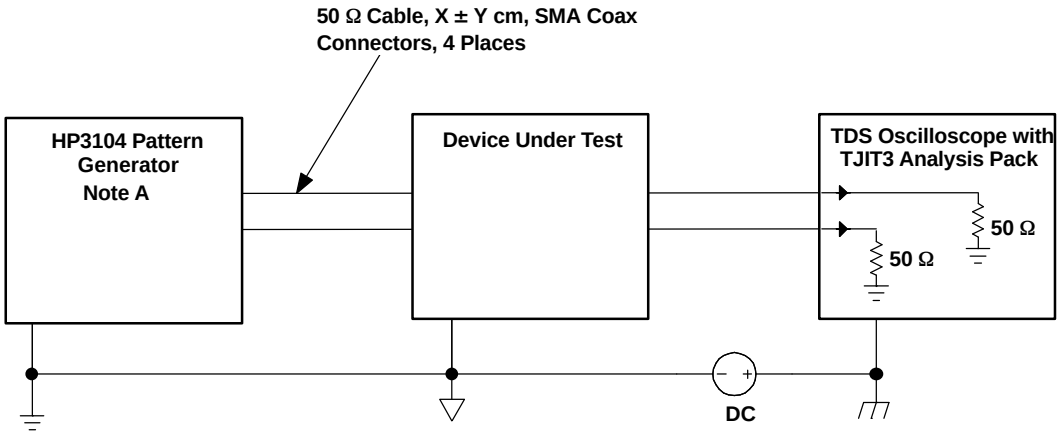

Figure 5. Jitter Measurement Setup

PARAMETER MEASUREMENT INFORMATION (continued)

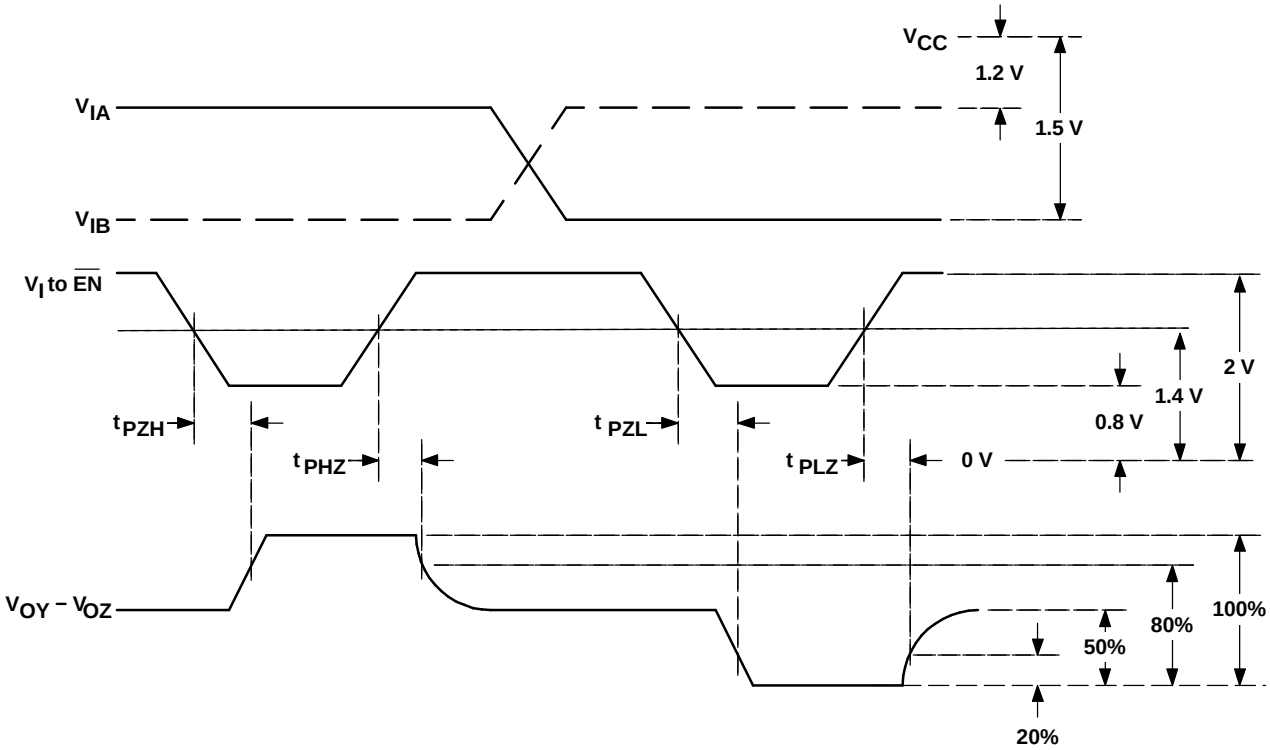

Figure 6. Enable and Disable Time Test Waveforms

DEVICE INFORMATION

FUNCTION TABLE(1)

A	B	$\overline{EN}$	Y	Z
H	H	L	?	?
L	H	L	L	H
H	L	L	H	L
L	L	L	?	?
X	X	H	Z	Z
Open	Open	L	?	?
X	X	Open	?	?

(1) H = high, L = low, Z = high impedance, ? = indeterminate

TOP VIEW

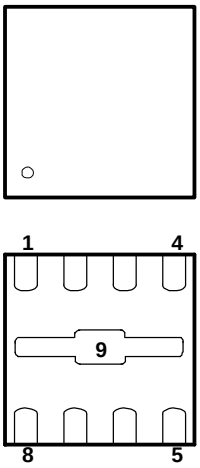

BOTTOM VIEW

Package Pin Assignments - Numerical Listing

PIN	SIGNAL	PIN	SIGNAL
1	NC	6	Z
2	A	7	Y
3	B	8	V_{CC}
4	V_{BB}	9	GND
5	$\overline{EN}$		

Package Pin Assignments - Alphabetical Listing

SIGNAL	PIN	SIGNAL	PIN
A	2	V_{BB}	4
B	3	V_{CC}	8
$\overline{EN}$	5	Y	7
GND	9	Z	6
NC	1		

TYPICAL CHARACTERISTICS

SUPPLY CURRENT vs FREQUENCY

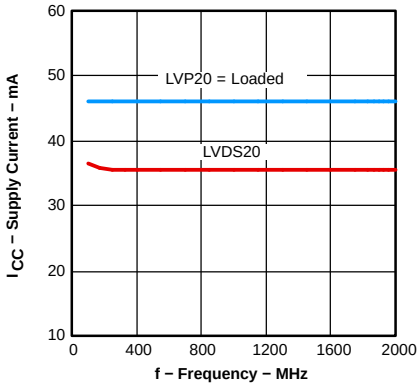

Figure 7.

SUPPLY CURRENT vs FREE-AIR TEMPERATURE

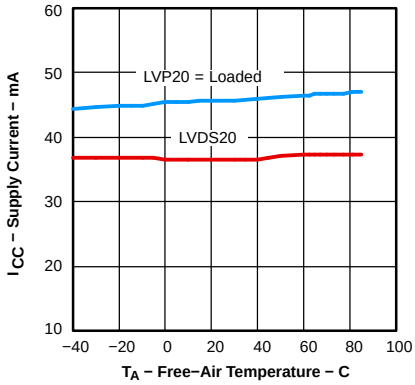

Figure 8.

DIFFERENTIAL OUTPUT VOLTAGE vs FREQUENCY

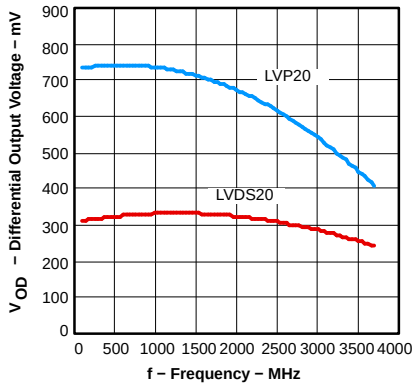

Figure 9.

LVDS20 RISE/FALL TIME vs FREE-AIR TEMPERATURE

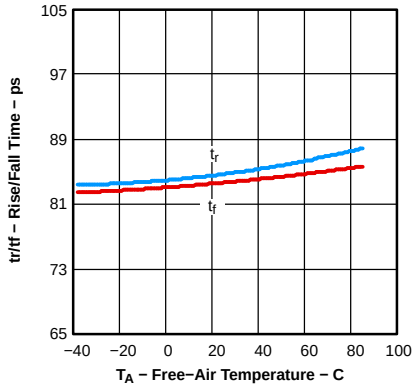

Figure 10.

LVP20 RISE/FALL TIME vs FREE-AIR TEMPERATURE

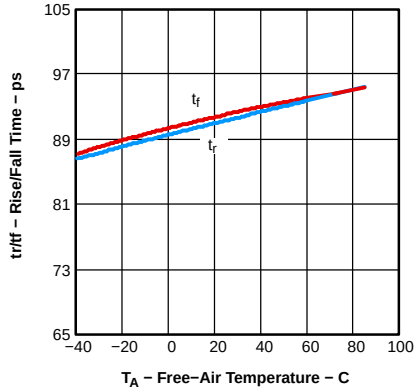

Figure 11.

LVDS20 PROPAGATION DELAY TIME vs FREE-AIR TEMPERATURE

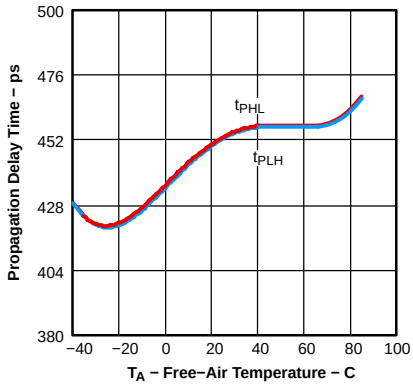

Figure 12.

TYPICAL CHARACTERISTICS (continued)

LVP20 PROPAGATION DELAY TIME vs FREE-AIR TEMPERATURE

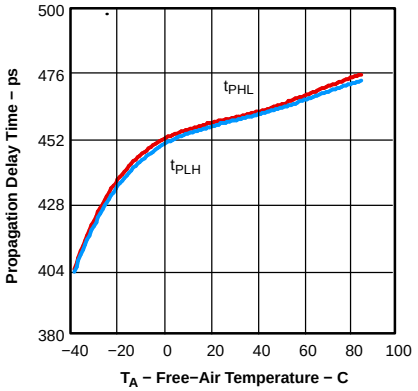

Figure 13.

PERIOD JITTER vs FREQUENCY

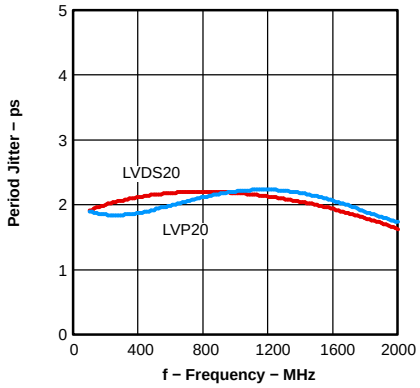

Figure 14.

PEAK-TO-PEAK JITTER vs FREQUENCY

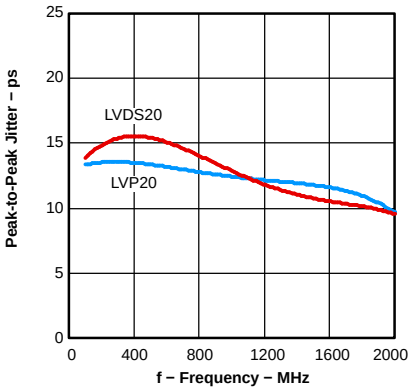

Figure 15.

PEAK-TO-PEAK JITTER vs DATA RATE

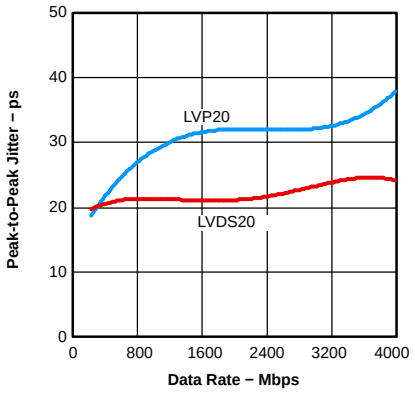

Figure 16.

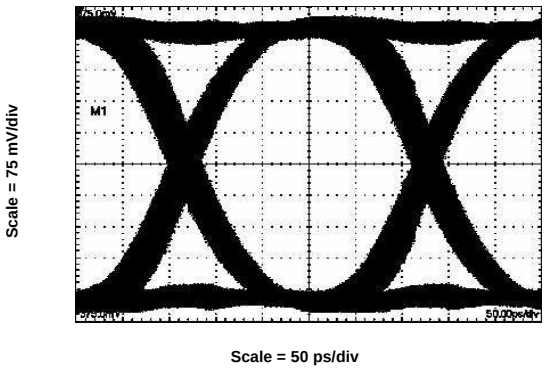

Figure 17. LVDS20 4-Gbps, 2^{23} - 1 PRBS

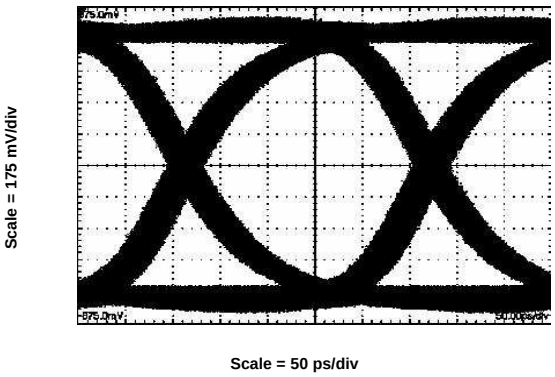

Figure 18. LVP20 4-Gbps, 2^{23} - 1 PRBS

TYPICAL CHARACTERISTICS (continued)

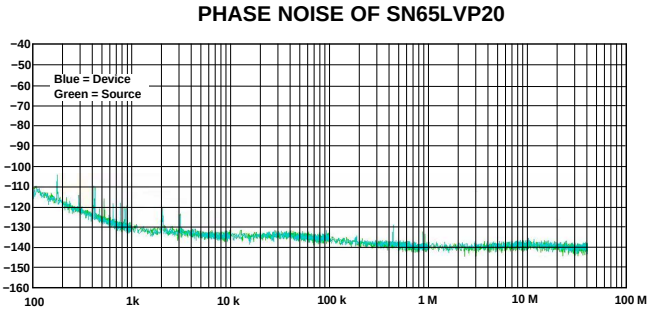

Figure 19. Frequency Offset From 155.52 MHz Carrier

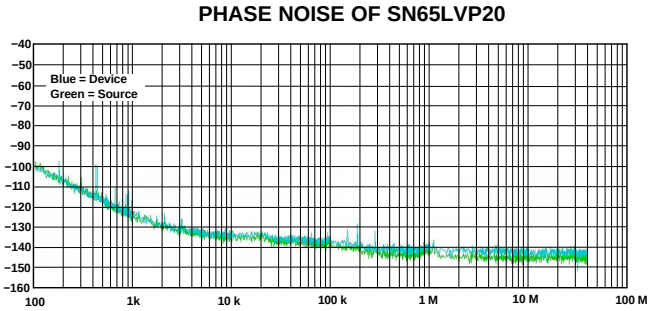

Figure 20. Frequency Offset From 622.08 MHz Carrier

EQUIVALENT INPUT AND OUTPUT SCHEMATIC DIAGRAMS

OUTPUT LVP20

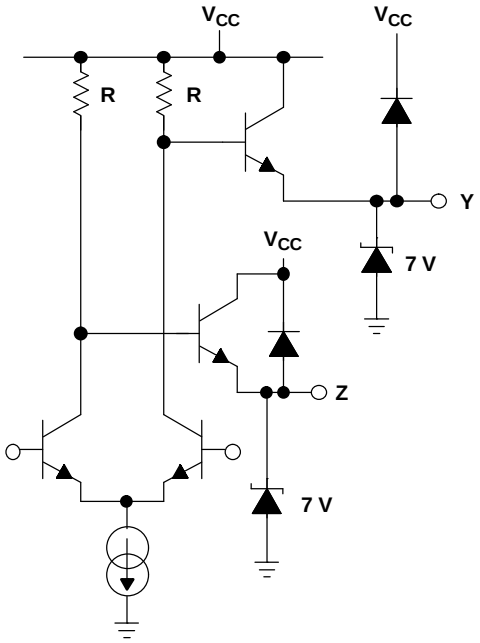

OUTPUT LVDS20

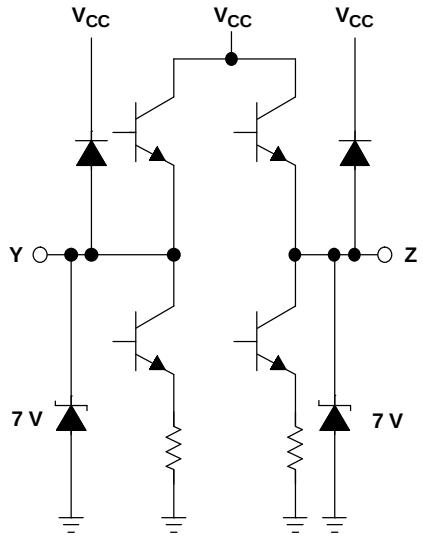

ENABLE

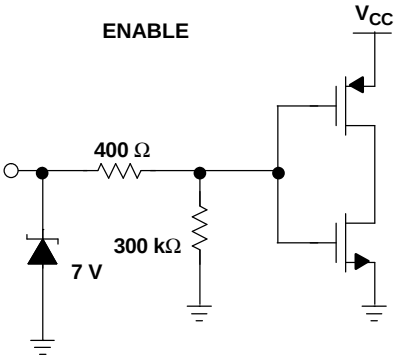

INPUT

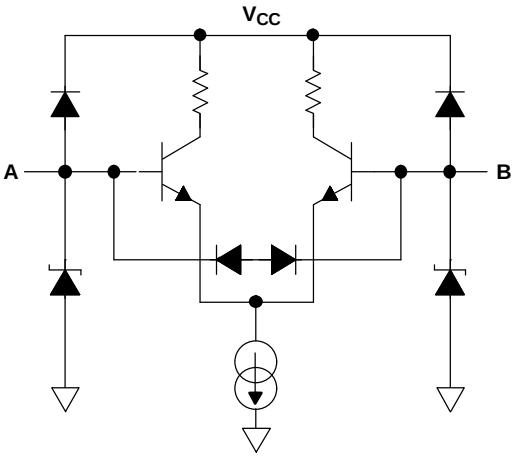

OUTPUT

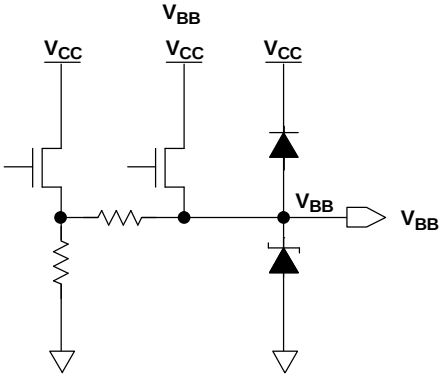

PACKAGING INFORMATION

Orderable Device	Status (1)	Package Type	Package Drawing	Pins	Package Qty	Eco Plan (2)	Lead/Ball Finish (6)	MSL Peak Temp (3)	Op Temp (°C)	Device Marking (4/5)	Samples
SN65LVDS20DRFR	ACTIVE	WSON	DRF	8	3000	Green (RoHS & no Sb/Br)	NIPDAU	Level-1-260C-UNLIM	-40 to 85	E8	Samples
SN65LVDS20DRFRG4	ACTIVE	WSON	DRF	8	3000	Green (RoHS & no Sb/Br)	NIPDAU	Level-1-260C-UNLIM	-40 to 85	E8	Samples
SN65LVDS20DRFT	ACTIVE	WSON	DRF	8	250	Green (RoHS & no Sb/Br)	NIPDAU	Level-1-260C-UNLIM	-40 to 85	E8	Samples
SN65LVDS20DRFTG4	ACTIVE	WSON	DRF	8	250	Green (RoHS & no Sb/Br)	NIPDAU	Level-1-260C-UNLIM	-40 to 85	E8	Samples
SN65LVP20DRFR	ACTIVE	WSON	DRF	8	3000	Green (RoHS & no Sb/Br)	NIPDAU	Level-1-260C-UNLIM	-40 to 85	E7	Samples
SN65LVP20DRFT	ACTIVE	WSON	DRF	8	250	Green (RoHS & no Sb/Br)	NIPDAU	Level-1-260C-UNLIM	-40 to 85	E7	Samples

(1) The marketing status values are defined as follows:
ACTIVE: Product device recommended for new designs.
LIFEBUY: TI has announced that the device will be discontinued, and a lifetime-buy period is in effect.
NRND: Not recommended for new designs. Device is in production to support existing customers, but TI does not recommend using this part in a new design.
PREVIEW: Device has been announced but is not in production. Samples may or may not be available.
OBSOLETE: TI has discontinued the production of the device.

(2) **RoHS:** TI defines "RoHS" to mean semiconductor products that are compliant with the current EU RoHS requirements for all 10 RoHS substances, including the requirement that RoHS substance do not exceed 0.1% by weight in homogeneous materials. Where designed to be soldered at high temperatures, "RoHS" products are suitable for use in specified lead-free processes. TI may reference these types of products as "Pb-Free".
RoHS Exempt: TI defines "RoHS Exempt" to mean products that contain lead but are compliant with EU RoHS pursuant to a specific EU RoHS exemption.
Green: TI defines "Green" to mean the content of Chlorine (Cl) and Bromine (Br) based flame retardants meet JS709B low halogen requirements of <=1000ppm threshold. Antimony trioxide based flame retardants must also meet the <=1000ppm threshold requirement.

(3) MSL, Peak Temp. - The Moisture Sensitivity Level rating according to the JEDEC industry standard classifications, and peak solder temperature.

(4) There may be additional marking, which relates to the logo, the lot trace code information, or the environmental category on the device.

(5) Multiple Device Markings will be inside parentheses. Only one Device Marking contained in parentheses and separated by a "~" will appear on a device. If a line is indented then it is a continuation of the previous line and the two combined represent the entire Device Marking for that device.

(6) Lead/Ball Finish - Orderable Devices may have multiple material finish options. Finish options are separated by a vertical ruled line. Lead/Ball Finish values may wrap to two lines if the finish value exceeds the maximum column width.

Important Information and Disclaimer: The information provided on this page represents TI's knowledge and belief as of the date that it is provided. TI bases its knowledge and belief on information provided by third parties, and makes no representation or warranty as to the accuracy of such information. Efforts are underway to better integrate information from third parties. TI has taken and continues to take reasonable steps to provide representative and accurate information but may not have conducted destructive testing or chemical analysis on incoming materials and chemicals. TI and TI suppliers consider certain information to be proprietary, and thus CAS numbers and other limited information may not be available for release.

In no event shall TI's liability arising out of such information exceed the total purchase price of the TI part(s) at issue in this document sold by TI to Customer on an annual basis.

TAPE AND REEL INFORMATION

REEL DIMENSIONS

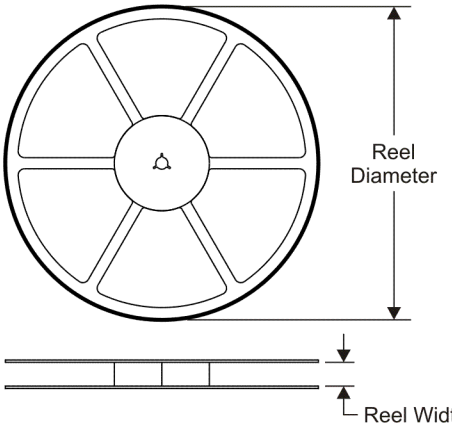

TAPE DIMENSIONS

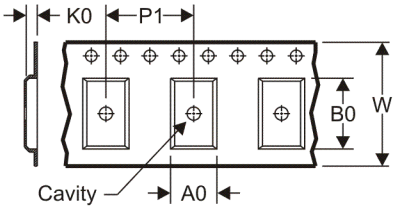

A0	Dimension designed to accommodate the component width
B0	Dimension designed to accommodate the component length
K0	Dimension designed to accommodate the component thickness
W	Overall width of the carrier tape
P1	Pitch between successive cavity centers

QUADRANT ASSIGNMENTS FOR PIN 1 ORIENTATION IN TAPE

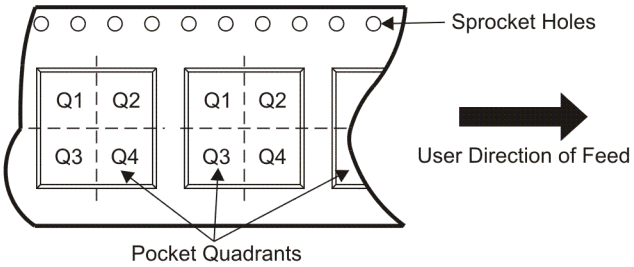

*All dimensions are nominal

Device	Package Type	Package Drawing	Pins	SPQ	Reel Diameter (mm)	Reel Width W1 (mm)	A0 (mm)	B0 (mm)	K0 (mm)	P1 (mm)	W (mm)	Pin1 Quadrant
SN65LVDS20DRFR	WSON	DRF	8	3000	330.0	8.8	2.3	2.3	1.0	4.0	8.0	Q2
SN65LVDS20DRFT	WSON	DRF	8	250	330.0	8.8	2.3	2.3	1.0	4.0	8.0	Q2
SN65LVP20DRFR	WSON	DRF	8	3000	330.0	8.8	2.3	2.3	1.0	4.0	8.0	Q2
SN65LVP20DRFT	WSON	DRF	8	250	330.0	8.8	2.3	2.3	1.0	4.0	8.0	Q2

TAPE AND REEL BOX DIMENSIONS

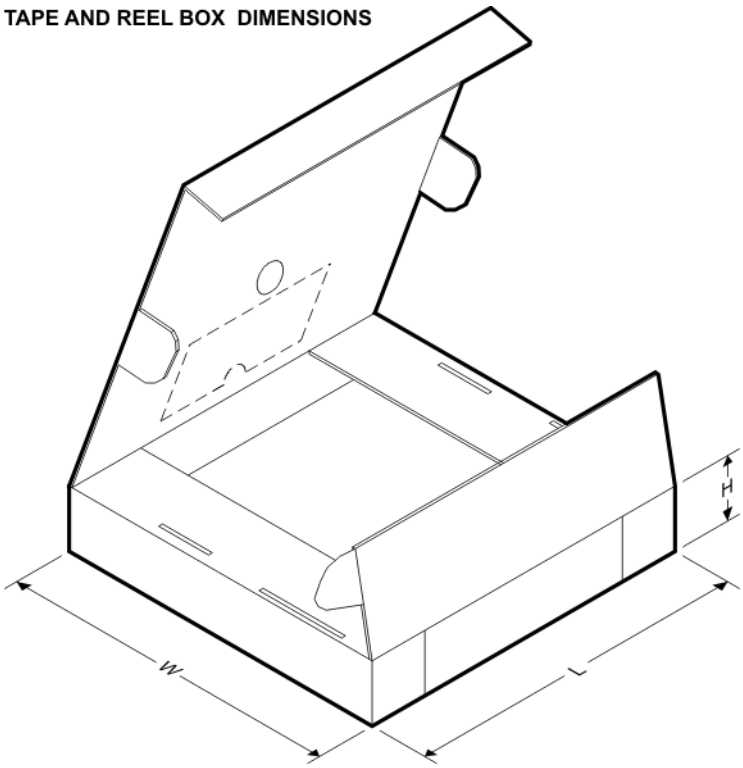

*All dimensions are nominal

Device	Package Type	Package Drawing	Pins	SPQ	Length (mm)	Width (mm)	Height (mm)
SN65LVDS20DRFR	WSON	DRF	8	3000	337.0	343.0	29.0
SN65LVDS20DRFT	WSON	DRF	8	250	337.0	343.0	29.0
SN65LVP20DRFR	WSON	DRF	8	3000	337.0	343.0	29.0
SN65LVP20DRFT	WSON	DRF	8	250	337.0	343.0	29.0

DRF (S–PWSON–N8) PLASTIC SMALL OUTLINE NO–LEAD

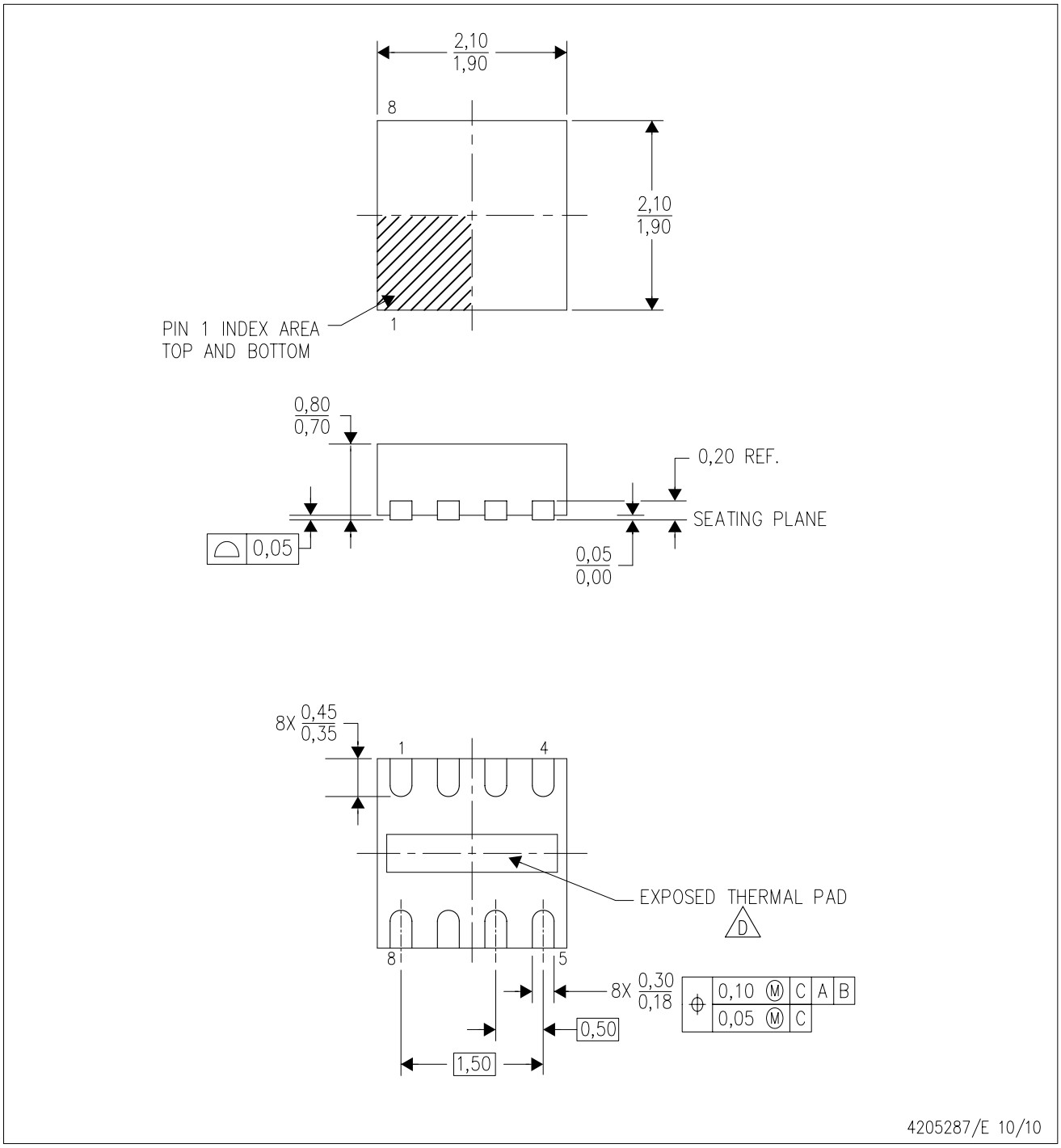

NOTES:
A. All linear dimensions are in millimeters. Dimensioning and tolerancing per ASME Y14.5M–1994.
B. This drawing is subject to change without notice.
C. Quad Flatpack, No–Leads (QFN) package configuration.
D. The Package thermal pad must be soldered to the board for thermal and mechanical performance. See product data sheet for details regarding the exposed thermal pad dimensions.
E. Falls within JEDEC MO–229.

DRF (S–PWSON–N8) PLASTIC SMALL OUTLINE NO–LEAD

THERMAL INFORMATION

This package incorporates an exposed thermal pad that is designed to be attached directly to an external heatsink. The thermal pad must be soldered directly to the printed circuit board (PCB). After soldering, the PCB can be used as a heatsink. In addition, through the use of thermal vias, the thermal pad can be attached directly to the appropriate copper plane shown in the electrical schematic for the device, or alternatively, can be attached to a special heatsink structure designed into the PCB. This design optimizes the heat transfer from the integrated circuit (IC).

For information on the Quad Flatpack No–Lead (QFN) package and its advantages, refer to Application Report, QFN/SON PCB Attachment, Texas Instruments Literature No. SLUA271. This document is available at www.ti.com.

The exposed thermal pad dimensions for this package are shown in the following illustration.

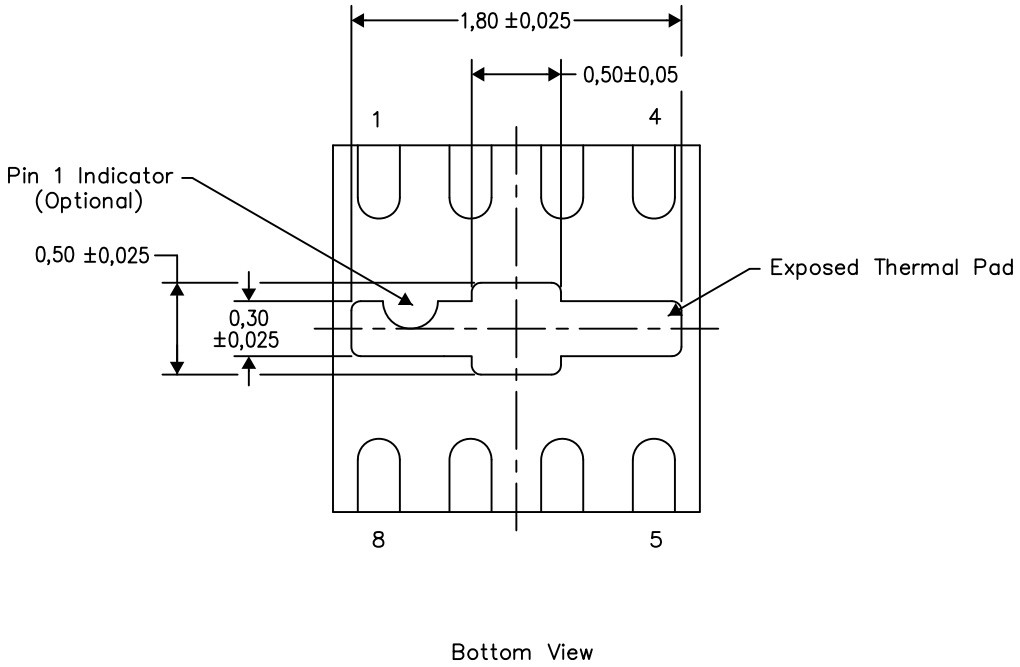

Exposed Thermal Pad Dimensions

4206840/H 12/14

NOTE: A. All linear dimensions are in millimeters

DRF (S–PWSON–N8) PLASTIC SMALL OUTLINE NO–LEAD

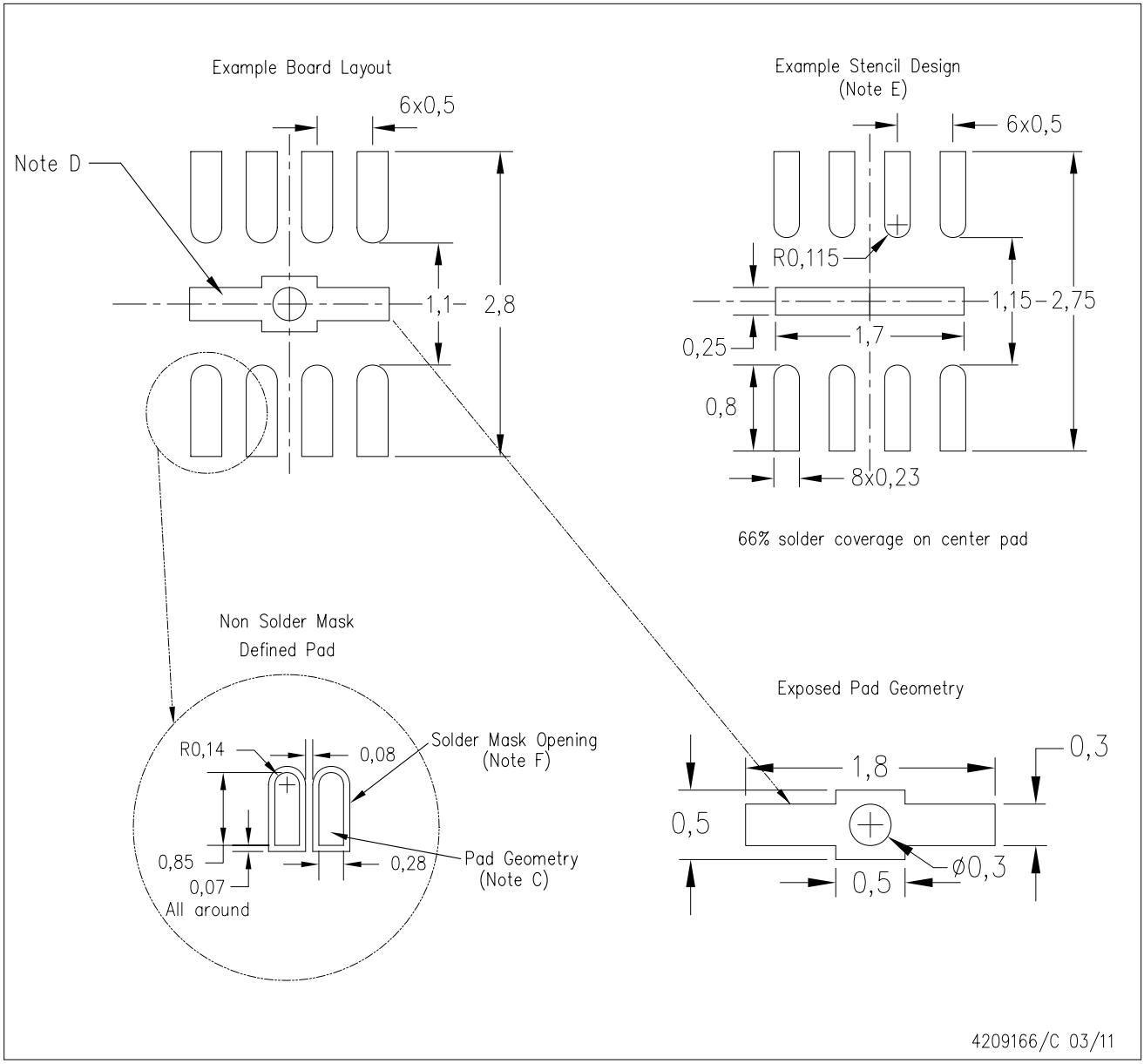

NOTES:
A. All linear dimensions are in millimeters.
B. This drawing is subject to change without notice.
C. Publication IPC–7351 is recommended for alternate designs.
D. This package is designed to be soldered to a thermal pad on the board. Refer to Application Note, Quad Flat–Pack Packages, Texas Instruments Literature No. SLUA271, and also the Product Data Sheets for specific thermal information, via requirements, and recommended board layout. These documents are available at www.ti.com <http://www.ti.com>.
E. Laser cutting apertures with trapezoidal walls and also rounding corners will offer better paste release. Customers should contact their board assembly site for stencil design recommendations. Refer to IPC 7525 for stencil design considerations.
F. Customers should contact their board fabrication site for minimum solder mask web tolerances between signal pads.

IMPORTANT NOTICE AND DISCLAIMER

TI PROVIDES TECHNICAL AND RELIABILITY DATA (INCLUDING DATASHEETS), DESIGN RESOURCES (INCLUDING REFERENCE DESIGNS), APPLICATION OR OTHER DESIGN ADVICE, WEB TOOLS, SAFETY INFORMATION, AND OTHER RESOURCES “AS IS” AND WITH ALL FAULTS, AND DISCLAIMS ALL WARRANTIES, EXPRESS AND IMPLIED, INCLUDING WITHOUT LIMITATION ANY IMPLIED WARRANTIES OF MERCHANTABILITY, FITNESS FOR A PARTICULAR PURPOSE OR NON-INFRINGEMENT OF THIRD PARTY INTELLECTUAL PROPERTY RIGHTS.

These resources are intended for skilled developers designing with TI products. You are solely responsible for (1) selecting the appropriate TI products for your application, (2) designing, validating and testing your application, and (3) ensuring your application meets applicable standards, and any other safety, security, or other requirements. These resources are subject to change without notice. TI grants you permission to use these resources only for development of an application that uses the TI products described in the resource. Other reproduction and display of these resources is prohibited. No license is granted to any other TI intellectual property right or to any third party intellectual property right. TI disclaims responsibility for, and you will fully indemnify TI and its representatives against, any claims, damages, costs, losses, and liabilities arising out of your use of these resources.

TI’s products are provided subject to TI’s Terms of Sale (www.ti.com/legal/termsofsale.html) or other applicable terms available either on ti.com or provided in conjunction with such TI products. TI’s provision of these resources does not expand or otherwise alter TI’s applicable warranties or warranty disclaimers for TI products.

Mailing Address: Texas Instruments, Post Office Box 655303, Dallas, Texas 75265
Copyright © 2020, Texas Instruments Incorporated