Wireless MCU RF

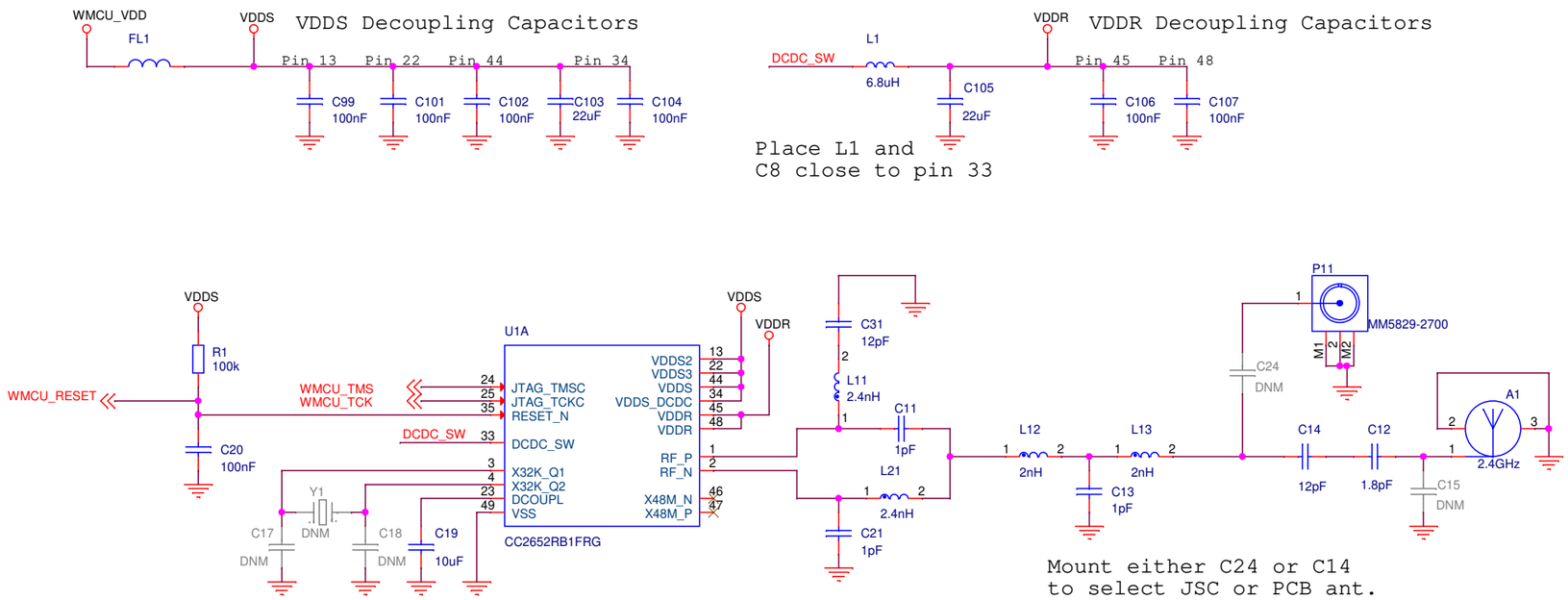

Wireless MCU IO block placed on page 2.

Title: LP-CC2652RB	Texas Instruments
Drawn: SJO	PN: MCU067
Checked: FGK	
Size: A3 Rev: B Sheet: 1 of 7	
Date: Thursday, October 17, 2019	

BoosterPack Headers and Peripherals

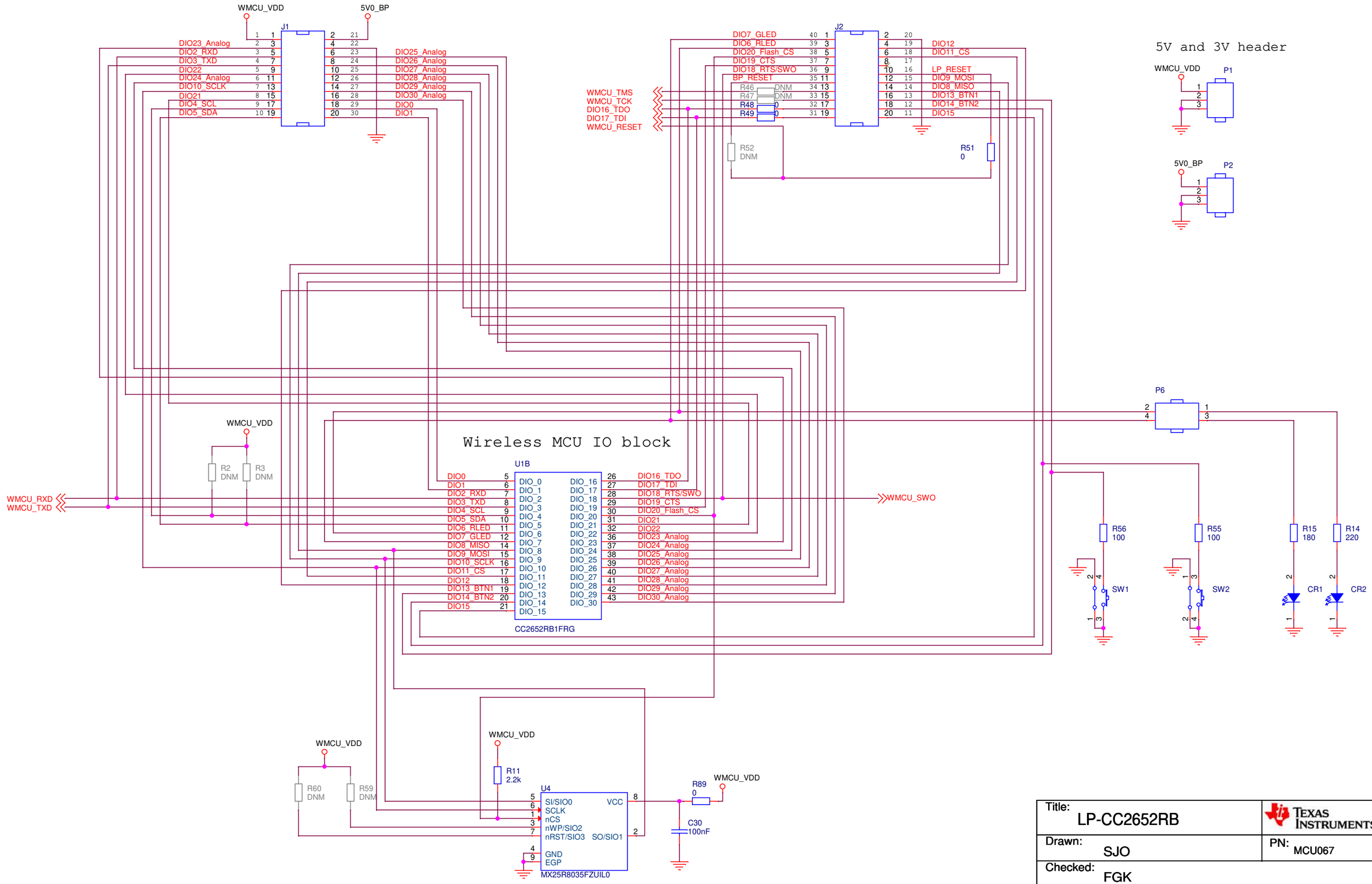

Title: LP-CC2652RB	Texas Instruments
Drawn: SJO	PN: MCU067
Checked: FGK	
Size: A3 Rev: B Sheet: 2 of 7	
Date: Thursday, October 17, 2019	

XDS110 Debugger Interface

P10 selects the voltage source for the level shifters
When powering the wireless MCU from the XDS supply, connect jumper between pins 1 and 2.
When powering the wireless MCU from the external supply, connect jumper between pins 2 and 3.

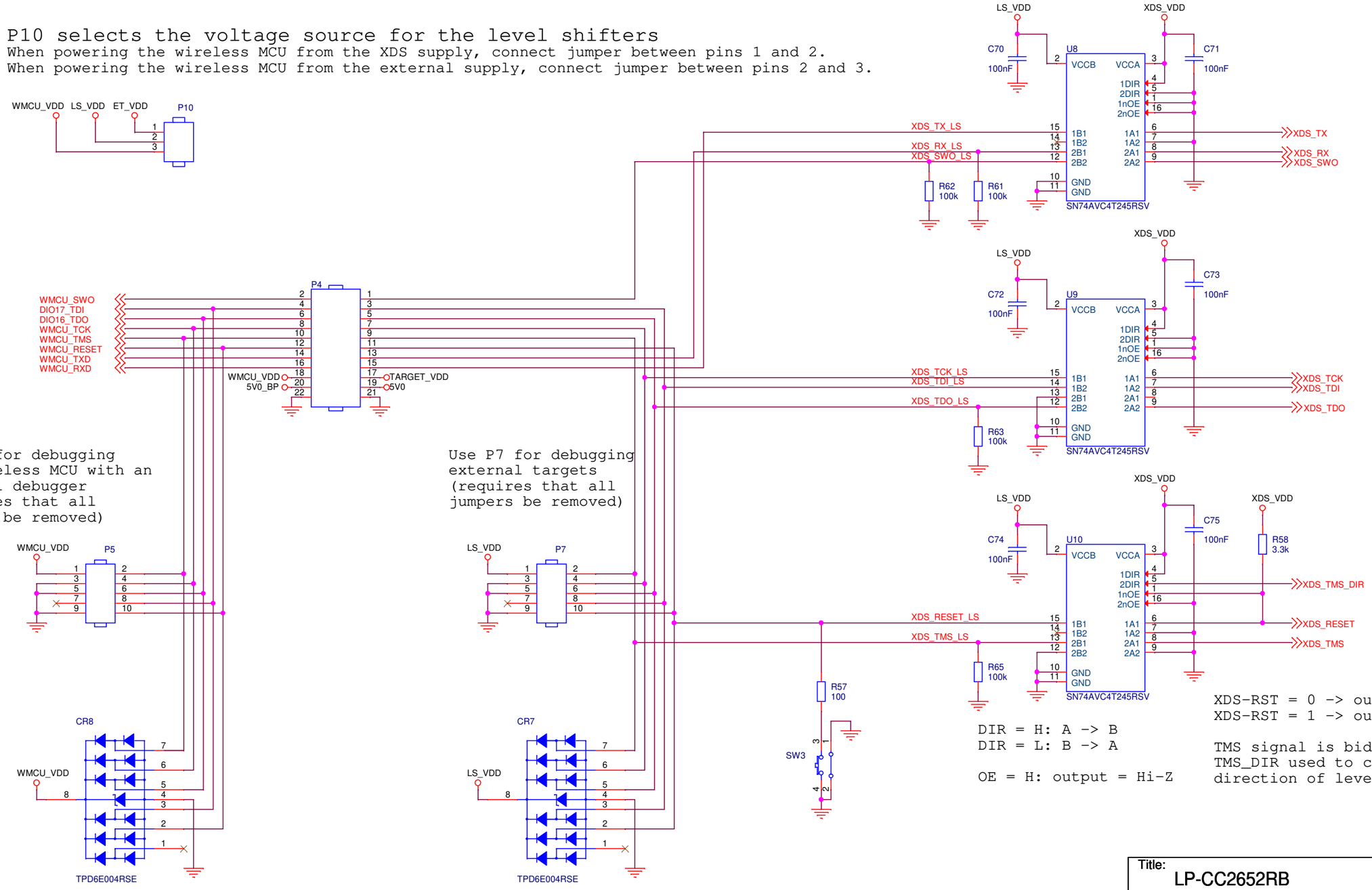

Title: LP-CC2652RB	Texas Instruments
Drawn: SJO	PN: MCU067
Checked: FGK	
Size: A3 Rev: B	Sheet: 3 of 7
Date: Thursday, October 17, 2019	

XDS110 Debugger

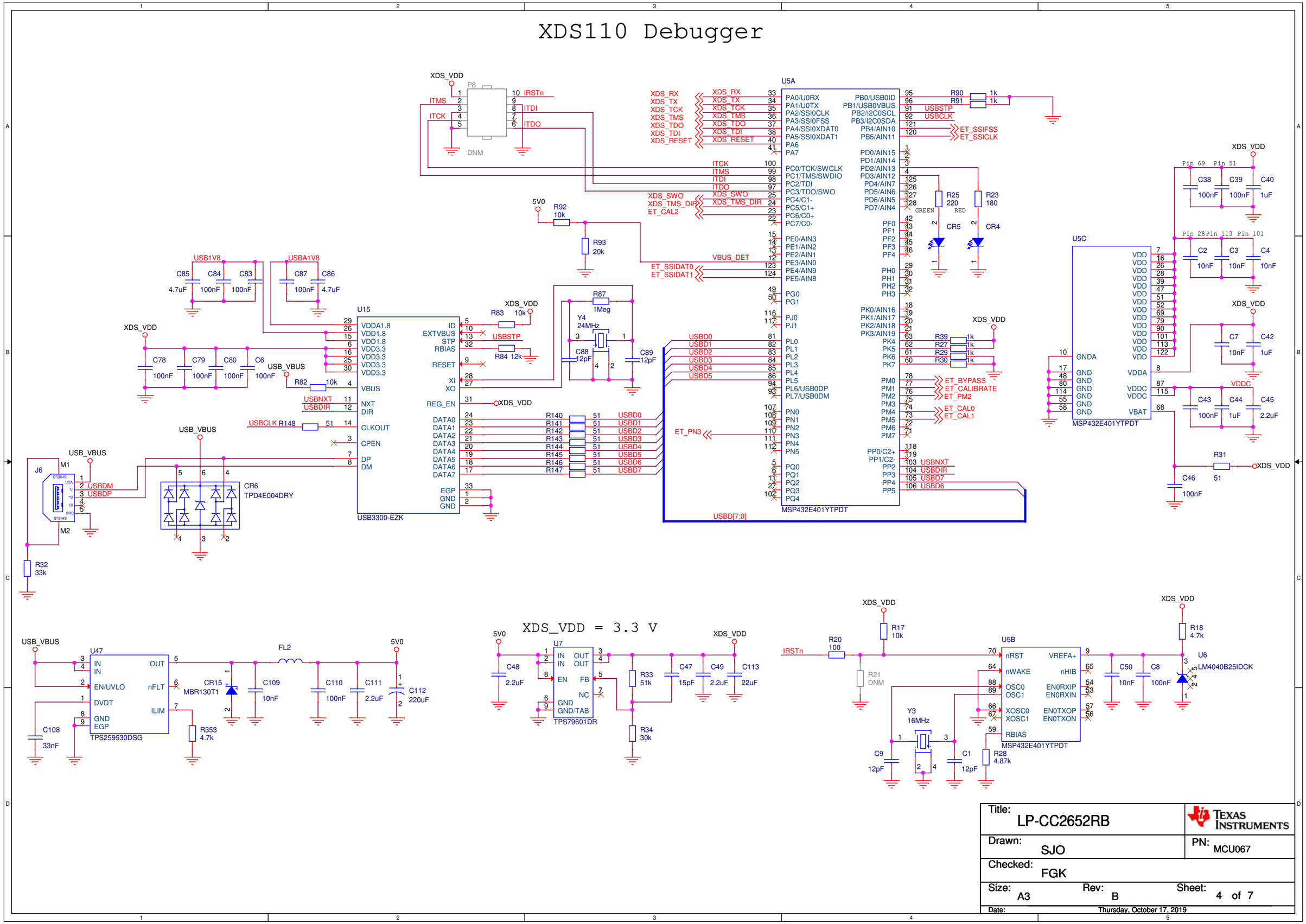

Title: LP-CC2652RB	Texas Instruments
Drawn: SJO	PN: MCU067
Checked: FGK	
Size: A3 Rev: B Sheet: 4 of 7	
Date: Thursday, October 17, 2019	

EnergyTrace

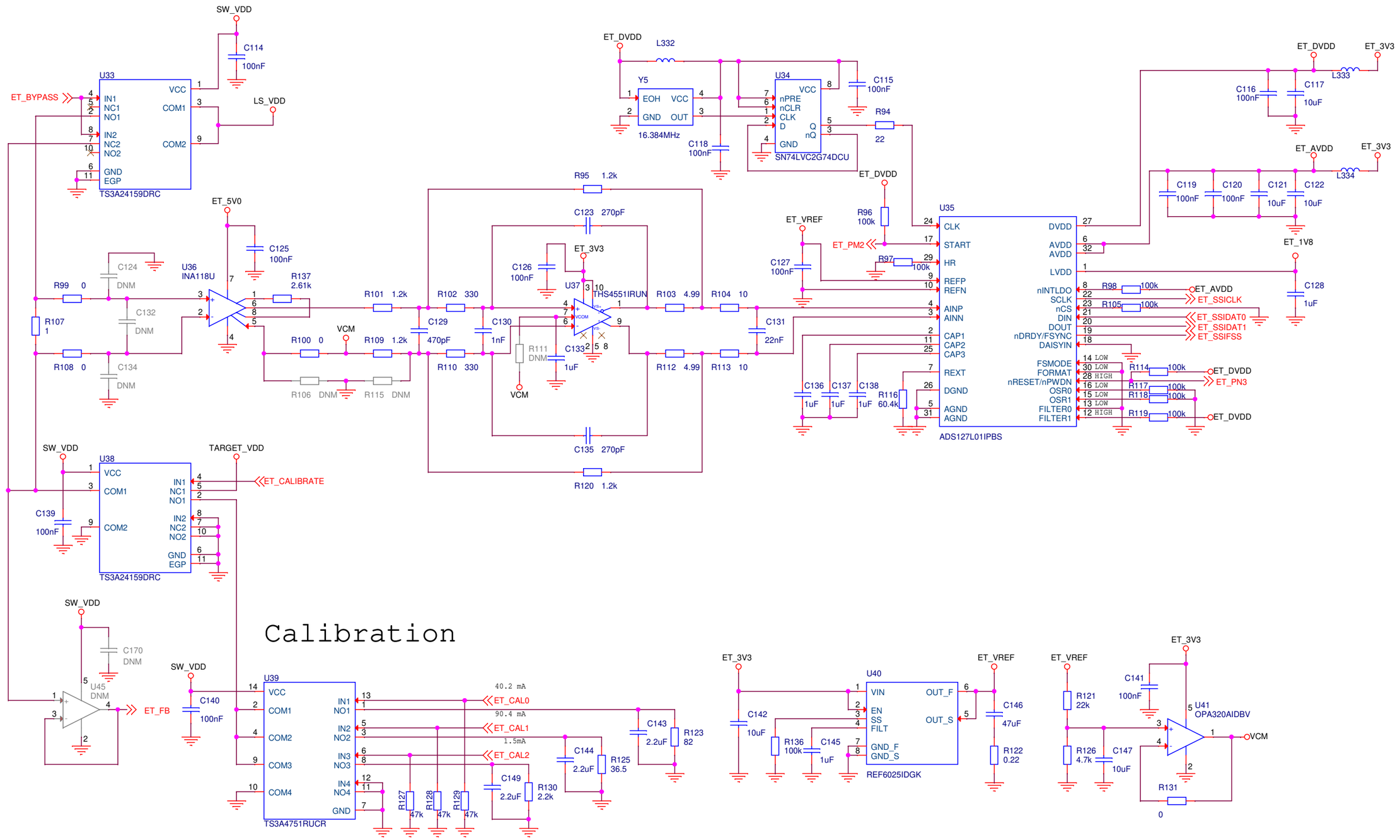

Calibration

Title: LP-CC2652RB	Texas Instruments
Drawn: SJO	PN: MCU067
Checked: FGK	
Size: A3 Rev: B Sheet: 5 of 7	
Date: Thursday, October 17, 2019	

EnergyTrace Power Supply

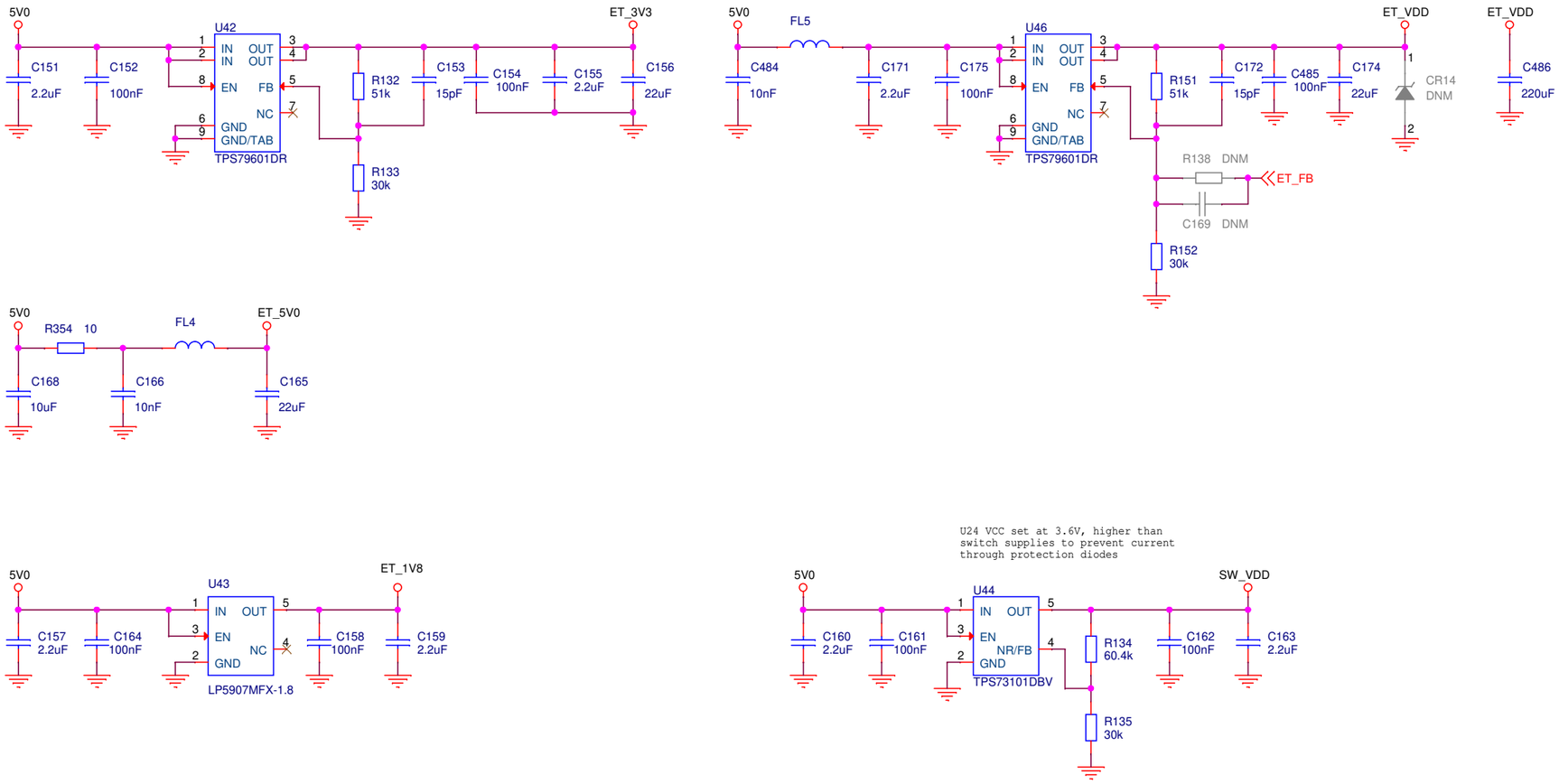

Title: LP-CC2652RB	Texas Instruments
Drawn: SJO	PN: MCU067
Checked: FGK	
Size: A3 Rev: B Sheet: 6 of 7	
Date: Thursday, October 17, 2019	

Mechanical

Jumpers

P6: M1 M2

P4: M3 M4 M5 M6 M7 M8 M9 M10 M11 M12 M13

P10: M14

PCB

PCB1

PCB

Mounting Holes

MH1 HOLE_3.2mm_PTH	MH2 HOLE_3.2mm_PTH	MH3 HOLE_3.2mm_PTH	MH4 HOLE_3.2mm_PTH	MH5 HOLE_1.1mm_PTH
M15 DCB-10	M16 DCB-10	M17 DCB-10	M18 DCB-10	

Place standoffs on bottom side.

Fiducials

FIDU1 FIDU2 FIDU3

FIDU4 FIDU5 FIDU6

Labels

LBL2 TI_LOGO

LBL3 CE_label

LBL4 FCC dsc LABEL_FOR_EVALUATION_ONLY

LBL5 TRASH_7mm

LBL6 ESD_LABEL_5x5mm

Stickers

LBL1 HW Rev: FW: YYMM LP_STICKER

Place sticker on bottom side.

Title: LP-CC2652RB	Texas Instruments
Drawn: SJO	PN: MCU067
Checked: FGK	
Size: A3 Rev: B Sheet: 7 of 7	
Date: Thursday, October 17, 2019	