QUAD, 8-BIT, LOW-POWER, VOLTAGE OUTPUT, I^2C INTERFACE DIGITAL-TO-ANALOG CONVERTER

FEATURES

- ***Micro*power Operation: 500 µA at 3 V V_{DD}**
- **Fast Update Rate: 188 kSPS**
- **Per-channel Power-down Capability**
- **Power-On Reset to Zero**
- **2.7-V to 5.5-V Analog Power Supply**
- **8-bit Monotonic**
- **I^2C™ Interface Up to 3.4 Mbps**
- **Data Transmit Capability**
- **On-Chip Output Buffer Amplifier, Rail-to-Rail Operation**
- **Double-Buffered Input Register**
- **Address Support for up to Four DAC5574s**
- **Synchronous Update Support for up to 16 Channels**
- **Operation From –40°C to 105°C**
- **Small 10 Lead MSOP Package**

APPLICATIONS

- **Process Control**
- **Data Acquisition Systems**
- **Closed-Loop Servo Control**
- **PC Peripherals**
- **Portable Instrumentation**

DESCRIPTION

The DAC5574 is a low-power, quad channel, 8-bit buffered voltage output DAC. Its on-chip precision output amplifier allows rail-to-rail output swing to be achieved. The DAC5574 utilizes an I^2C compatible two wire serial interface supporting high-speed interface mode with address support of up to four DAC5574s for a total of 16 channels on the bus.

The DAC5574 uses V_{DD} and GND to set the output range of the DAC. The DAC5574 incorporates a power-on-reset circuit that ensures that the DAC output powers up at zero volts and remains there until a valid write takes place to the device. The DAC5574 contains a per-channel power-down feature, accessed via the internal control register, reducing the current consumption of the device to 200 nA at 5 V.

The low power consumption of this part in normal operation makes it ideally suited to portable battery operated equipment. The power consumption is less than 3mW at V_{DD} = 5 V reducing to 1 µW in power-down mode.

TI offers a variety of data converters with I^2C interface. See DACx57x family of 16/12/10/8 bit, single and quad channel DACs. Also see ADS7823 and ADS1100, 12-bit octal channel and 16-bit single channel ADCs.

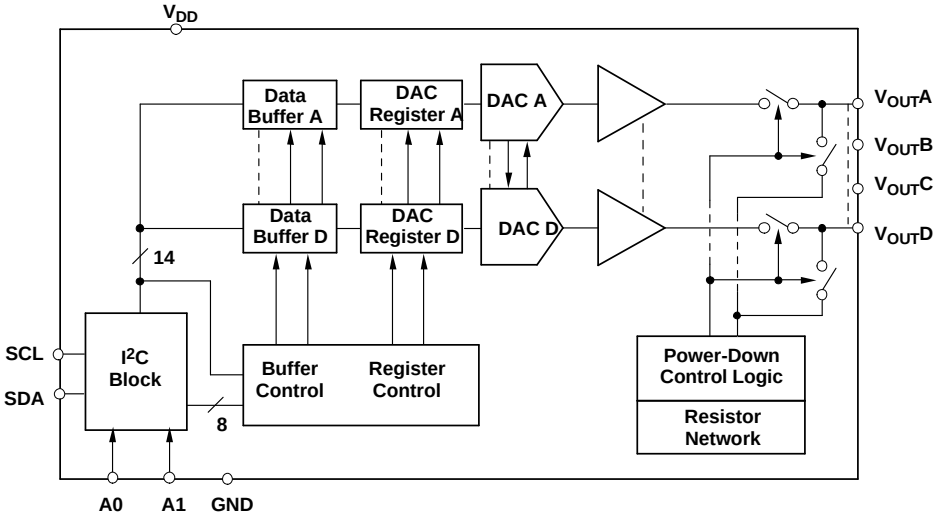

Please be aware that an important notice concerning availability, standard warranty, and use in critical applications of Texas Instruments semiconductor products and disclaimers thereto appears at the end of this data sheet.

I^2C is a trademark of Philips Corporation.

PRODUCTION DATA information is current as of publication date. Products conform to specifications per the terms of the Texas Instruments standard warranty. Production processing does not necessarily include testing of all parameters.

Copyright © 2003, Texas Instruments Incorporated

This integrated circuit can be damaged by ESD. Texas Instruments recommends that all integrated circuits be handled with appropriate precautions. Failure to observe proper handling and installation procedures can cause damage.

ESD damage can range from subtle performance degradation to complete device failure. Precision integrated circuits may be more susceptible to damage because very small parametric changes could cause the device not to meet its published specifications.

PACKAGE/ORDERING INFORMATION(1)

PRODUCT	PACKAGE	PACKAGE DRAWING NUMBER	SPECIFICATION TEMPERATURE RANGE	PACKAGE MARKING	ORDERING NUMBER	TRANSPORT MEDIA
DAC5574	10-MSOP	DGS	–40°C TO +105°C	D574	DAC5574IDGS	80 Piece Tube
					DAC5574IDGSR	2500 Piece Tape and Reel

(1) For the most current package and ordering information, see the Package Option Addendum at the end of this document, or see the TI website at www.ti.com.

DGS PACKAGE (TOPVIEW)

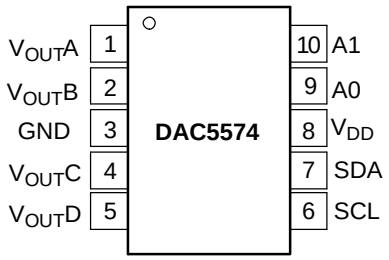

PIN DESCRIPTIONS

PIN	NAME	DESCRIPTION
1	$V_{OUT}A$	Analog output voltage from DAC A
2	$V_{OUT}B$	Analog output voltage from DAC B
3	GND	Ground reference point for all circuitry on the part
4	$V_{OUT}C$	Analog output voltage from DAC C
5	$V_{OUT}D$	Analog output voltage from DAC D
6	SCL	Serial clock input
7	SDA	Serial data input and output
8	V_{DD}	Analog voltage supply input
9	A0	Device address select - I^2C
10	A1	Device address select - I^2C

ABSOLUTE MAXIMUM RATINGS(1)

V_{DD} to GND		–0.3 V to +6 V
Digital input voltage to GND		–0.3 V to V_{DD} + 0.3 V
V_{OUT} to GND		–0.3 V to V_{DD} + 0.3 V
Operating temperature range		–40°C to +105°C
Storage temperature range		–65°C to +150°C
Junction temperature range (T_J max)		+150°C
Power dissipation:	Thermal impedance (ΘJA)	270°C/W
	Thermal impedance (ΘJC)	77°C/W
Lead temperature, soldering:	Vapor phase (60s)	215°C
	Infrared (15s)	220°C

(1) Stresses above those listed under Absolute Maximum Ratings may cause permanent damage to the device. Exposure to absolute maximum conditions for extended periods may affect device reliability.

ELECTRICAL CHARACTERISTICS

V_{DD} = 2.7 V to 5.5 V, R_L = 2 kΩ to GND; C_L = 200 pF to GND; all specifications –40°C to +105°C, unless otherwise specified.

PARAMETER	TEST CONDITIONS	MIN	TYP	MAX	UNITS
STATIC PERFORMANCE (1)					
Resolution		8			Bits
Relative accuracy			±0.15	±0.5	LSB
Differential nonlinearity	Specified monotonic by design		±0.02	±0.25	LSB
Zero-scale error			5	20	mV
Full-scale error			-0.15	±1.0	% of FSR
Gain error				±1.0	% of FSR
Zero code error drift			±7		µV/°C
Gain temperature coefficient			± 3		ppm of FSR/°C
OUTPUT CHARACTERISTICS (2)					
Output voltage range		0		V_{DD}	V
Output voltage settling time (full scale)	R_L = ∞; 0 pF < C_L < 200 pF		6	8	µs
	R_L = ∞ ; C_L = 500 pF		12		µs
Slew rate			1		V/µs
dc crosstalk (channel-to-channel)			0.0025		LSB
ac crosstalk (channel-to-channel)	1 kHz Sine Wave		-100		dB
Capacitive load stability	R_L= ∞		470		pF
	R_L= 2 kΩ		1000		pF
Digital-to-analog glitch impulse	1 LSB change around major carry		12		nV-s
Digital feedthrough			0.3		nV-s
dc output impedance			1		Ω
Short-circuit current	V_{DD}= 5 V		50		mA
	V_{DD}= 3 V		20		mA
Power-up time	Coming out of power-down mode, V_{DD}= +5 V		2.5		µs
	Coming out of power-down mode, V_{DD}= +3 V		5		µs
LOGIC INPUTS (2)					
Input current				±1	µA
V_{IN_L}, Input low voltage				0.3xV_{DD}	V
V_{IN_H}, Input high voltage	V_{DD}= 3 V	0.7xV_{DD}			V
Pin Capacitance				3	pF
POWER REQUIREMENTS					
V_{DD}		2.7		5.5	V
I_{DD}(normal operation), including reference current	Excluding load current				
I_{DD}@ V_{DD}=+3.6V to +5.5V	V_{IH}= V_{DD} and V_{IL}=GND		600	900	µA
I_{DD}@ V_{DD} =+2.7V to +3.6V	V_{IH}= V_{DD} and V_{IL}=GND		500	750	µA
I_{DD} (all power-down modes)					
I_{DD}@ V_{DD}=+3.6V to +5.5V	V_{IH}= V_{DD} and V_{IL}=GND		0.2	1	µA
I_{DD}@ V_{DD} =+2.7V to +3.6V	V_{IH}= V_{DD} and V_{IL}=GND		0.05	1	µA
POWER EFFICIENCY					
I_{OUT}/I_{DD}	I_{LOAD}= 2 mA, V_{DD}= +5 V		93%		
TEMPERATURE RANGE					
Specified performance		-40		+105	°C

(1) Linearity tested using a reduced code range of 48 to 4047; output unloaded.
(2) Specified by design and characterization, not production tested.

TIMING CHARACTERISTICS

V_{DD} = 2.7 V to 5.5 V, R_L = 2 kΩ to GND; all specifications –40°C to +105°C, unless otherwise specified.

SYMBOL	PARAMETER	TEST CONDITIONS	MIN	TYP	MAX	UNITS
f_{SCL}	SCL clock frequency	Standard mode			100	kHz
		Fast mode			400	kHz
		High-Speed Mode, C_B = 100 pF max			3.4	MHz
		High-speed mode, C_B = 400 pF max			1.7	MHz
t_{BUF}	Bus free time between a STOP and START condition	Standard mode	4.7			µs
		Fast mode	1.3			µs
t_{HD}; t_{STA}	Hold time (repeated) START condition	Standard mode	4.0			µs
		Fast mode	600			ns
		High-speed mode	160			ns
t_{LOW}	LOW period of the SCL clock	Standard mode	4.7			µs
		Fast mode	1.3			µs
		High-speed mode, C_B = 100 pF max	160			ns
		High-speed mode, C_B = 400 pF max	320			ns
t_{HIGH}	HIGH period of the SCL clock	Standard mode	4.0			µs
		Fast mode	600			ns
		High-Speed Mode, C_B = 100 pF max	60			ns
		High-speed mode, C_B = 400 pF max	120			ns
t_{SU}; t_{STA}	Setup time for a repeated START condition	Standard mode	4.7			µs
		Fast mode	600			ns
		High-speed mode	160			ns
t_{SU}; t_{DAT}	Data setup time	Standard mode	250			ns
		Fast mode	100			ns
		High-speed mode	10			ns
t_{HD}; t_{DAT}	Data hold time	Standard mode	0		3.45	µs
		Fast mode	0		0.9	µs
		High-speed mode, C_B = 100 pF max	0		70	ns
		High-speed mode, C_B = 400 pF max	0		150	ns
t_{RCL}	Rise time of SCL signal	Standard mode			1000	ns
		Fast mode	20 + 0.1C_B		300	ns
		High-speed mode, C_B = 100 pF max	10		40	ns
		High-speed mode, C_B = 400 pF max	20		80	ns
t_{RCL1}	Rise time of SCL signal after a repeated START condition and after an acknowledge BIT	Standard mode			1000	ns
		Fast mode	20 + 0.1C_B		300	ns
		High-speed mode, C_B = 100 pF max	10		80	ns
		High-speed mode, C_B = 400 pF max	20		160	ns
t_{FCL}	Fall time of SCL signal	Standard mode			300	ns
		Fast mode	20 + 0.1C_B		300	ns
		High-speed mode, C_B = 100 pF max	10		40	ns
		High-speed mode, C_B = 400 pF max	20		80	ns
t_{RDA}	Rise time of SDA signal	Standard mode			1000	ns
		Fast mode	20 + 0.1C_B		300	ns
		High-speed mode, C_B = 100 pF max	10		80	ns
		High-speed mode, C_B = 400 pF max	20		160	ns

TIMING CHARACTERISTICS (continued)

V_{DD} = 2.7 V to 5.5 V, R_L = 2 kΩ to GND; all specifications –40°C to +105°C, unless otherwise specified.

SYMBOL	PARAMETER	TEST CONDITIONS	MIN	TYP	MAX	UNITS
t_{FDA}	Fall time of SDA signal	Standard mode			300	ns
		Fast mode	20 + 0.1C_B		300	ns
		High-speed mode, C_B = 100 pF max	10		80	ns
		High-speed mode, C_B = 400 pF max	20		160	ns
t_{SU}; t_{STO}	Setup time for STOP condition	Standard mode	4.0			µs
		Fast mode	600			ns
		High-speed mode	160			ns
C_B	Capacitive load for SDA and SCL				400	pF
t_{SP}	Pulse width of spike suppressed	Fast mode			50	ns
		High-speed mode			10	ns
V_{NH}	Noise margin at the HIGH level for each connected device (including hysteresis)	Standard mode	0.2 V_{DD}			V
		Fast mode				
		High-speed mode				
V_{NL}	Noise margin at the LOW level for each connected device (including hysteresis)	Standard mode	0.1 V_{DD}			V
		Fast mode				
		High-speed mode				

TYPICAL CHARACTERISTICS

At T_A = +25°C, unless otherwise noted.

LINEARITY ERROR AND DIFFERENTIAL LINEARITY ERROR vs DIGITAL INPUT CODE

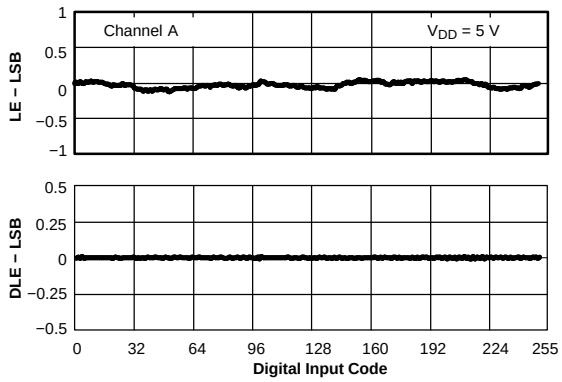

Figure 1.

LINEARITY ERROR AND DIFFERENTIAL LINEARITY ERROR vs DIGITAL INPUT CODE

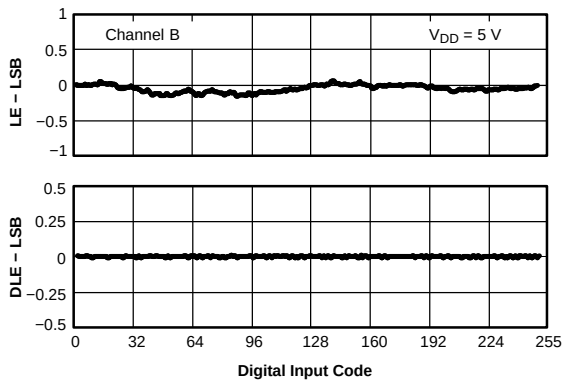

Figure 2.

TYPICAL CHARACTERISTICS (continued)

At T_A = +25°C, unless otherwise noted.

LINEARITY ERROR AND DIFFERENTIAL LINEARITY ERROR vs DIGITAL INPUT CODE

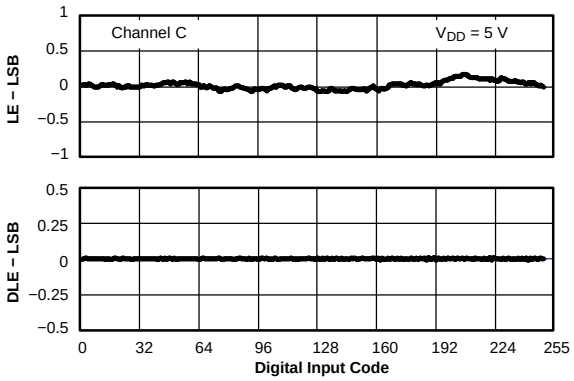

Figure 3.

LINEARITY ERROR AND DIFFERENTIAL LINEARITY ERROR vs DIGITAL INPUT CODE

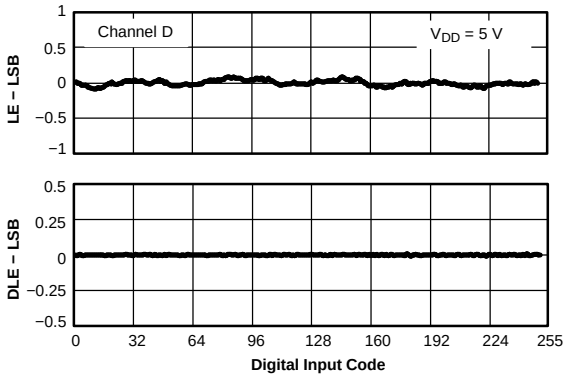

Figure 4.

LINEARITY ERROR AND DIFFERENTIAL LINEARITY ERROR vs DIGITAL INPUT CODE

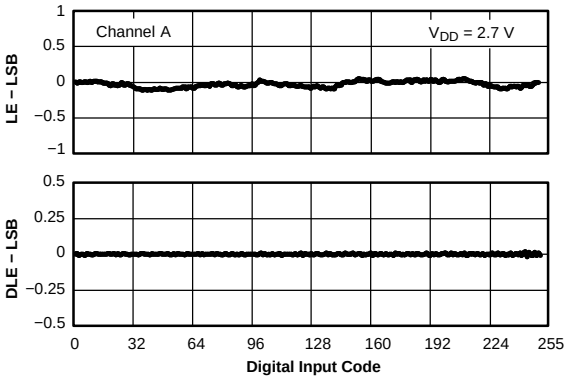

Figure 5.

LINEARITY ERROR AND DIFFERENTIAL LINEARITY ERROR vs DIGITAL INPUT CODE

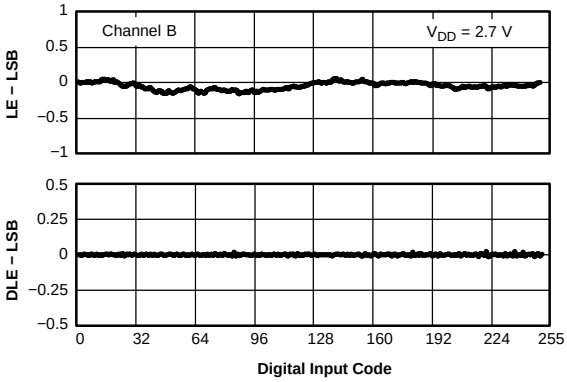

Figure 6.

LINEARITY ERROR AND DIFFERENTIAL LINEARITY ERROR vs DIGITAL INPUT CODE

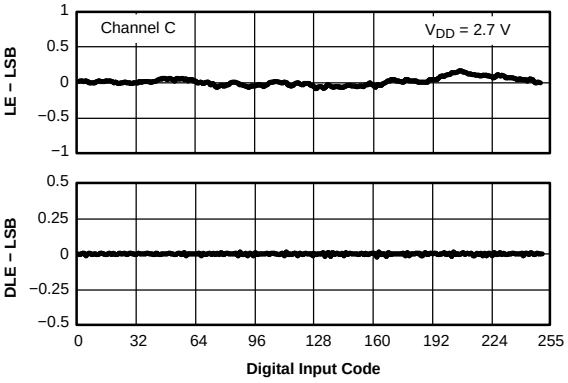

Figure 7.

LINEARITY ERROR AND DIFFERENTIAL LINEARITY ERROR vs DIGITAL INPUT CODE

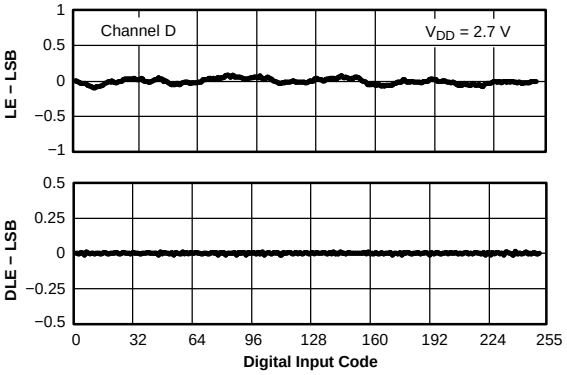

Figure 8.

TYPICAL CHARACTERISTICS (continued)

At T_A = +25°C, unless otherwise noted.

ZERO-SCALE ERROR vs TEMPERATURE

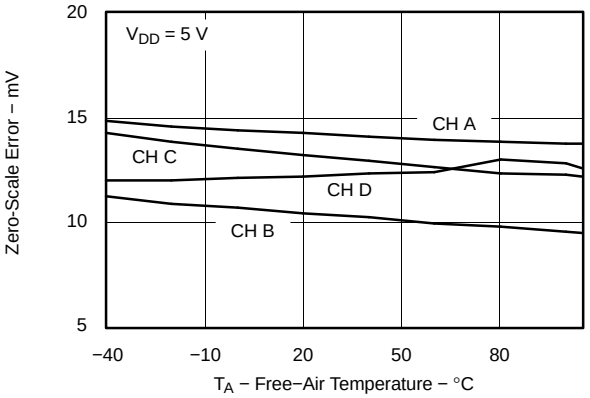

Figure 9.

ZERO-SCALE ERROR vs TEMPERATURE

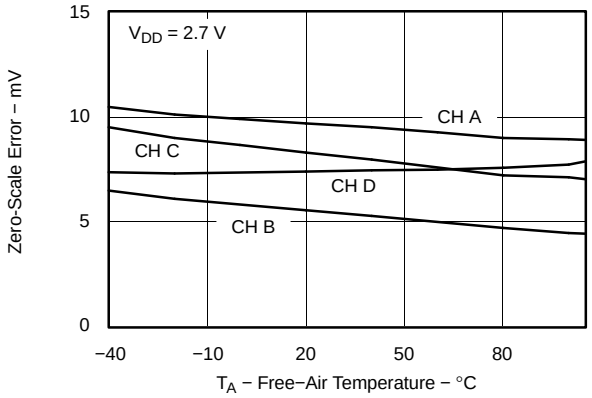

Figure 10.

FULL-SCALE ERROR vs TEMPERATURE

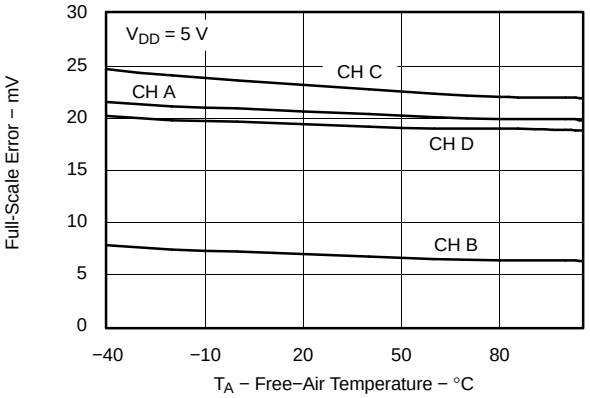

Figure 11.

FULL-SCALE ERROR vs TEMPERATURE

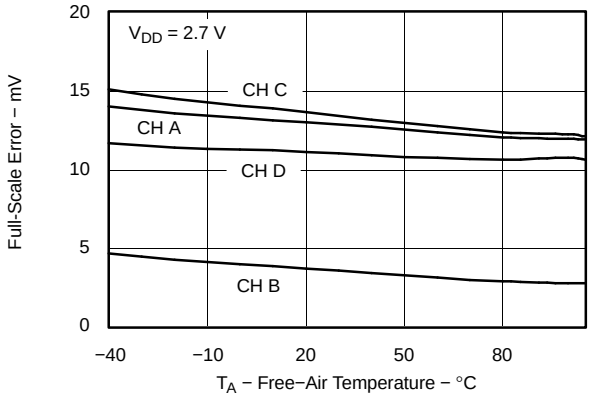

Figure 12.

SINK CURRENT CAPABILITY AT NEGATIVE RAIL

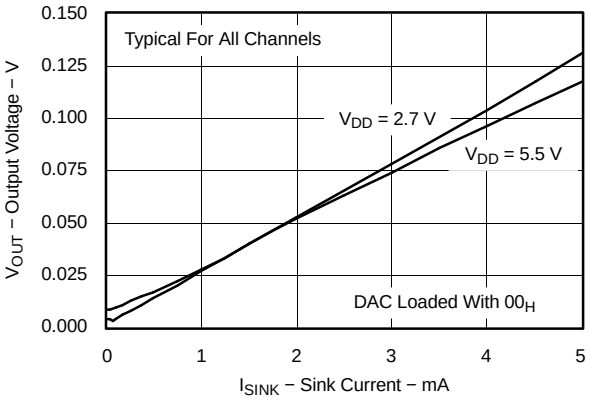

Figure 13.

SOURCE CURRENT CAPABILITY AT POSITIVE RAIL

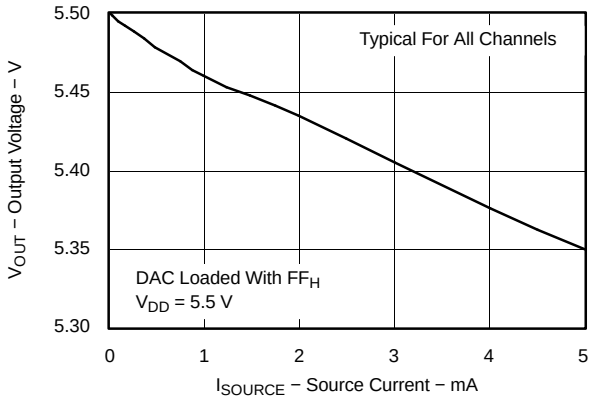

Figure 14.

TYPICAL CHARACTERISTICS (continued)

At T_A = +25°C, unless otherwise noted.

SOURCE CURRENT CAPABILITY AT POSITIVE RAIL

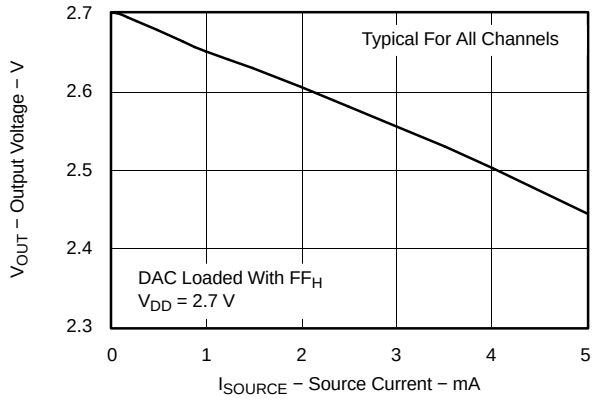

Figure 15.

SUPPLY CURRENT vs DIGITAL INPUT CODE

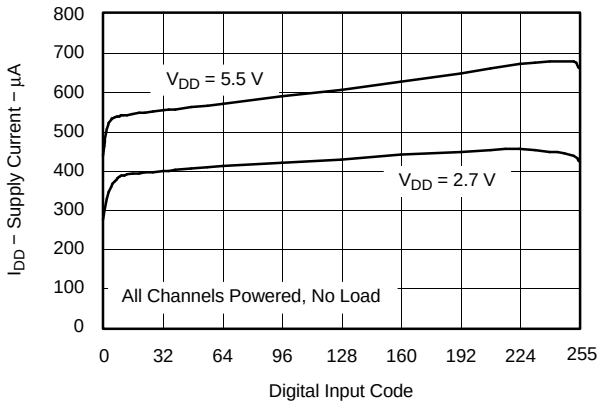

Figure 16.

SUPPLY CURRENT vs TEMPERATURE

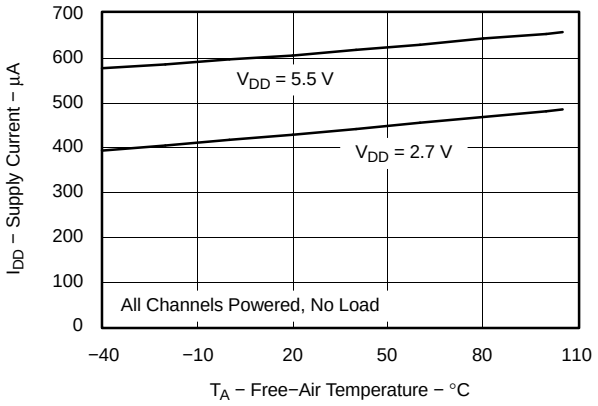

Figure 17.

SUPPLY CURRENT vs SUPPLY VOLTAGE

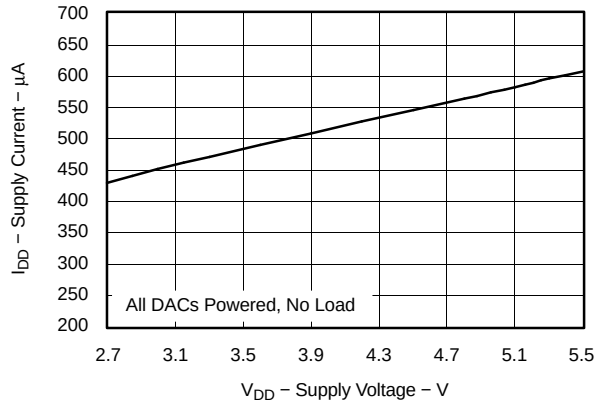

Figure 18.

SUPPLY CURRENT vs LOGIC INPUT VOLTAGE

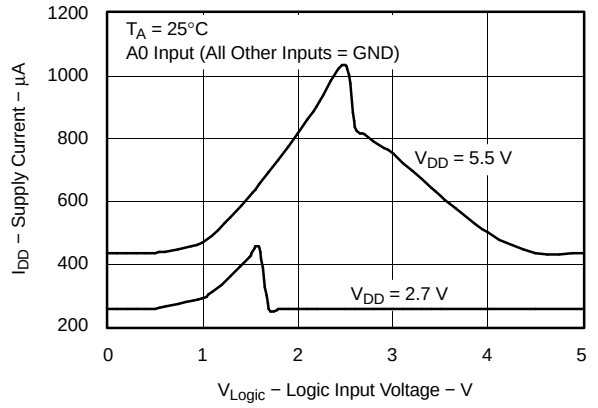

Figure 19.

HISTOGRAM OF CURRENT CONSUMPTION

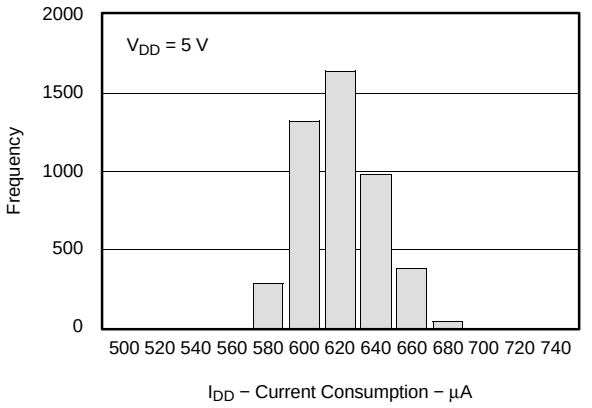

Figure 20.

TYPICAL CHARACTERISTICS (continued)

At T_A = +25°C, unless otherwise noted.

HISTOGRAM OF CURRENT CONSUMPTION

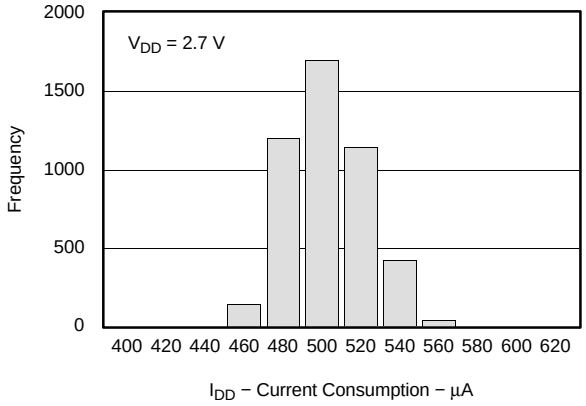

Figure 21.

EXITING POWER-DOWN MODE

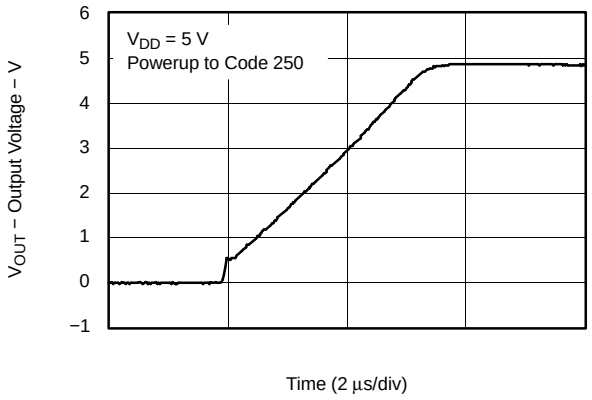

Figure 22.

LARGE SIGNAL SETTLING TIME

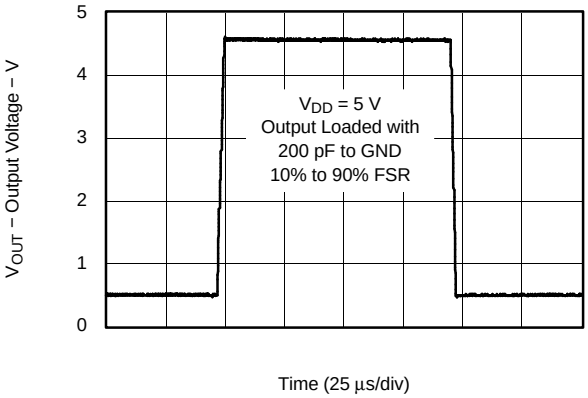

Figure 23.

LARGE SIGNAL SETTLING TIME

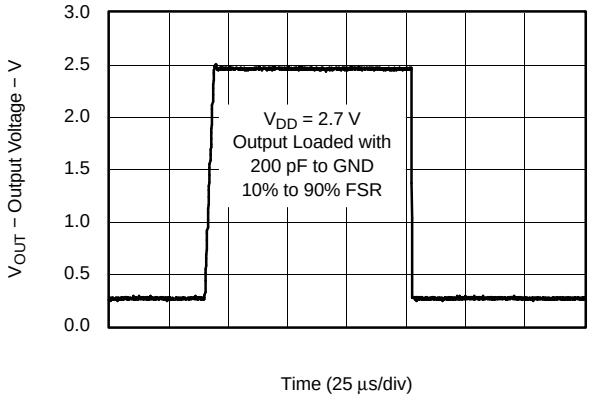

Figure 24.

ABSOLUTE ERROR†

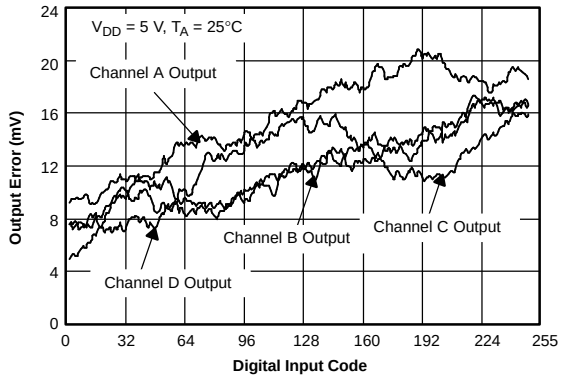

Figure 25.

ABSOLUTE ERROR†

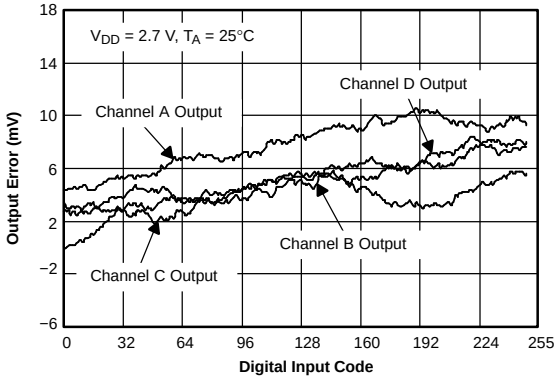

Figure 26.

†Absolute error is the deviation from ideal DAC characteristics. It includes affects of offset, gain, and integral linearity.

THEORY OF OPERATION

D/A SECTION

The architecture of the DAC5574 consists of a string DAC followed by an output buffer amplifier. Figure 27 shows a generalized block diagram of the DAC architecture.

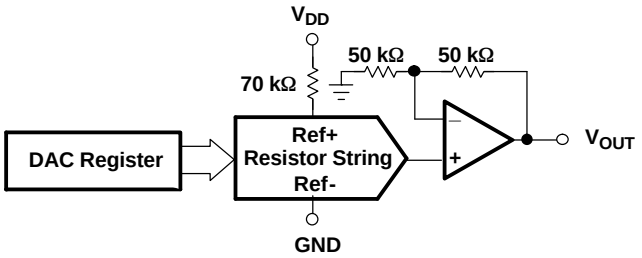

Figure 27. R-String DAC Architecture

The input coding to the DAC5574 is unsigned binary, which gives the ideal output voltage as:

$$V_{OUT} = V_{DD} \times \frac{D}{256}$$

Where D = decimal equivalent of the binary code that is loaded to the DAC register; it can range from 0 to 255.

RESISTOR STRING

The resistor string section is shown in Figure 28. It is basically a divide-by-2 resistor, followed by a string of resistors, each of value R. The code loaded into the DAC register determines at which node on the string the voltage is tapped off to be fed into the output amplifier by closing one of the switches connecting the string to the amplifier. Because the architecture consists of a string of resistors, it is specified monotonic.

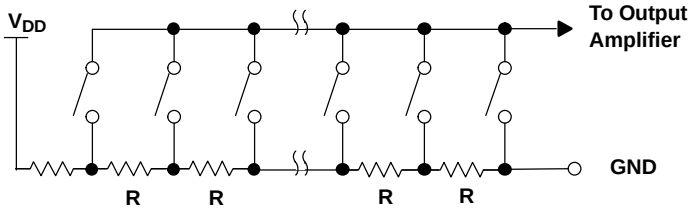

Figure 28. Typical Resistor String

Output Amplifier

The output buffer is a gain-of-2 noninverting amplifiers, capable of generating rail-to-rail voltages on its output, which gives an output range of 0V to V_{DD}. It is capable of driving a load of 2 kΩ in parallel with 1000 pF to GND. The source and sink capabilities of the output amplifier can be seen in the typical curves. The slew rate is 1 V/µs with a half-scale settling time of 6µs with the output unloaded.

I²C Interface

I²C is a 2-wire serial interface developed by Philips Semiconductor (see I²C-Bus Specification, Version 2.1, January 2000). The bus consists of a data line (SDA) and a clock line (SCL) with pullup structures. When the bus is *idle*, both SDA and SCL lines are pulled high. All the I²C compatible devices connect to the I²C bus through open drain I/O pins, SDA and SCL. A *master* device, usually a microcontroller or a digital signal processor, controls the bus. The master is responsible for generating the SCL signal and device addresses. The master also generates specific conditions that indicate the START and STOP of data transfer. A *slave* device receives and/or transmits data on the bus under control of the master device.

THEORY OF OPERATION (continued)

The DAC5574 works as a slave and supports the following data transfer *modes*, as defined in the I^2C-Bus Specification: standard mode (100 kbps), fast mode (400 kbps), and high-speed mode (3.4 Mbps). The data transfer protocol for standard and fast modes is exactly the same, therefore they are referred to as F/S-mode in this document. The protocol for high-speed mode is different from the F/S-mode, and it is referred to as H/S-mode. The DAC5574 supports 7-bit addressing; 10-bit addressing and general call address are *not* supported.

F/S-Mode Protocol

- The *master* initiates data transfer by generating a *start condition*. The *start condition* is when a high-to-low transition occurs on the SDA line while SCL is high, as shown in Figure 29. All I^2C-compatible devices should recognize a *start condition*.
- The master then generates the SCL pulses, and transmits the 7-bit address and the *read/write direction bit* R/$\overline{W}$ on the SDA line. During all transmissions, the master ensures that data is *valid*. A *valid data* condition requires the SDA line to be stable during the entire high period of the clock pulse (see Figure 30). All devices recognize the address sent by the master and compare it to their internal fixed addresses. Only the slave device with a matching address generates an *acknowledge* (see Figure 31) by pulling the SDA line low during the entire high period of the 9th SCL cycle. Upon detecting this acknowledge, the master knows that communication link with a slave has been established.
- The master generates further SCL cycles to either *transmit* data to the slave (R/$\overline{W}$ bit 1) or *receive* data from the slave (R/$\overline{W}$ bit 0). In either case, the *receiver* needs to acknowledge the data sent by the *transmitter*. So acknowledge signal can either be generated by the master or by the slave, depending on which one is the receiver. 9-bit valid data sequences consisting of 8-bit data and 1-bit acknowledge can continue as long as necessary.
- To signal the end of the data transfer, the master generates a *stop condition* by pulling the SDA line from low to high while the SCL line is high (see Figure 29). This releases the bus and stops the communication link with the addressed slave. All I^2C compatible devices must recognize the stop condition. Upon the receipt of a *stop condition*, all devices know that the bus is released, and they wait for a *start condition* followed by a matching address.

H/S-Mode Protocol

- When the bus is idle, both SDA and SCL lines are pulled high by the pullup devices.
- The master generates a start condition followed by a valid serial byte containing H/S master code 00001XXX. This transmission is made in F/S-mode at no more than 400 Kbps. No device is allowed to acknowledge the H/S master code, but all devices must recognize it and switch their internal setting to support 3.4 Mbps operation.
- The master then generates a *repeated start condition* (a repeated start condition has the same timing as the start condition). After this repeated start condition, the protocol is the same as F/S-mode, except that transmission speeds up to 3.4 Mbps are allowed. A stop condition ends the H/S-mode and switches all the internal settings of the slave devices to support the F/S-mode. Instead of using a stop condition, repeated start conditions should be used to secure the bus in H/S-mode.

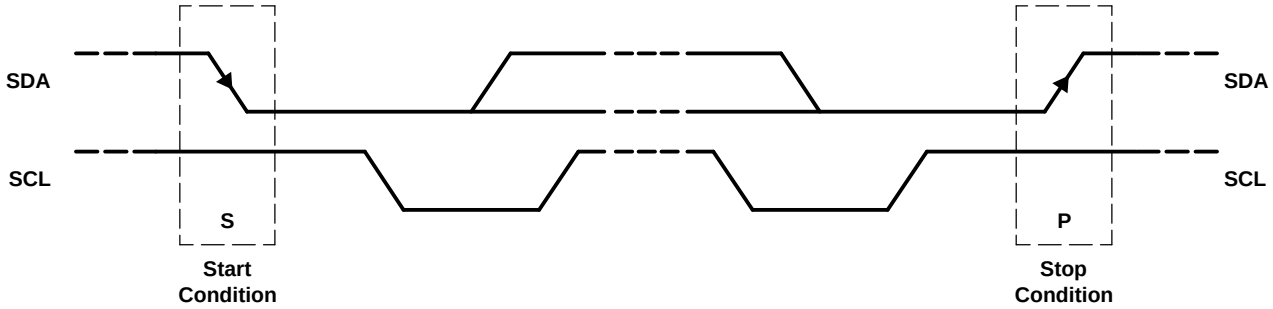

Figure 29. START and STOP Conditions

THEORY OF OPERATION (continued)

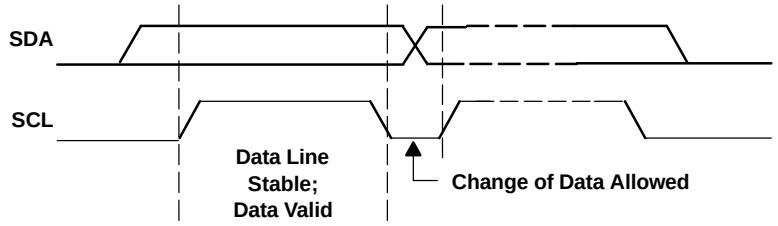

Figure 30. Bit Transfer on the I²C Bus

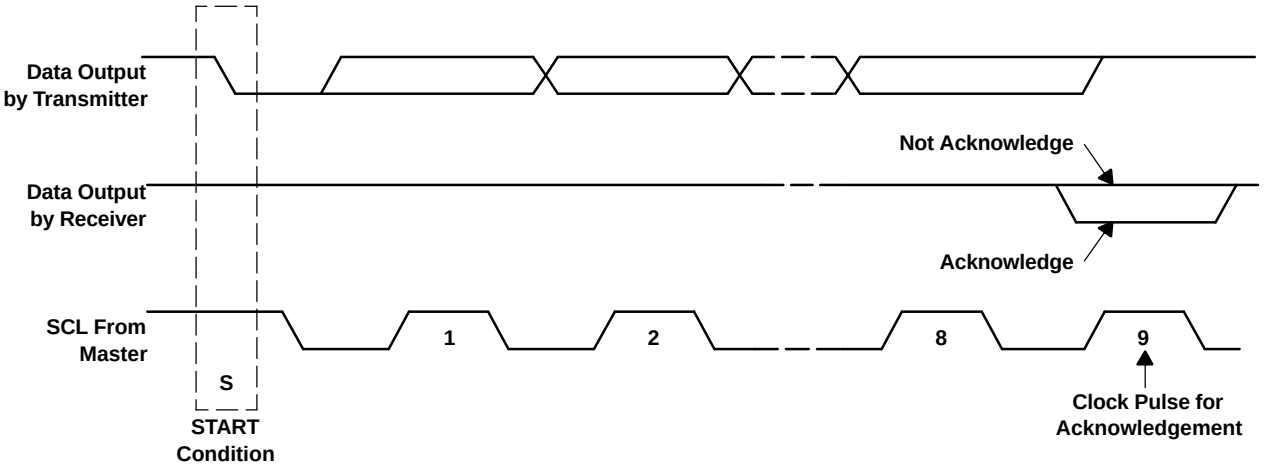

Figure 31. Acknowledge on the I²C Bus

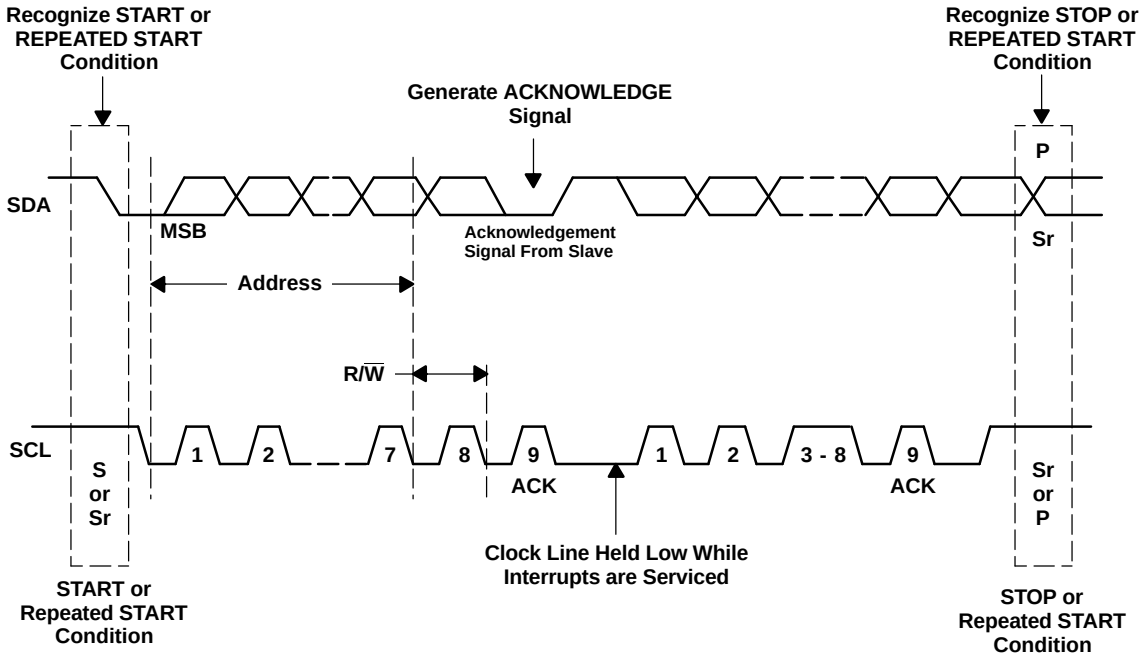

Figure 32. Bus Protocol

DAC5574 I²C Update Sequence

The DAC5574 requires a start condition, a valid I²C address, a control byte, an MSB byte, and an LSB byte for a single update. After the receipt of each byte, DAC5574 acknowledges by pulling the SDA line low during the high period of a single clock pulse. A valid I²C address selects the DAC5574. The control byte sets the operational mode of the selected DAC5574. Once the operational mode is selected by the control byte, DAC5574 expects an MSB byte followed by an LSB byte for data update to occur. DAC5574 performs an update on the falling edge of the acknowledge signal that follows the LSB byte.

Control byte needs not to be resent until a change in operational mode is required. The bits of the control byte continuously determine the type of update performed. Thus, for the first update, DAC5574 requires a start condition, a valid I²C address, a control byte, an MSB byte and an LSB byte. For all consecutive updates, DAC5574 needs an MSB byte and an LSB byte as long as the control command remains the same.

Using the I²C high-speed mode (f_{scl}= 3.4 MHz), the clock running at 3.4 MHz, each 8-bit DAC update other than the first update can be done within 18 clock cycles (MSB byte, acknowledge signal, LSB byte, acknowledge signal), at 188.88 KSPS. Using the fast mode (f_{scl}= 400 kHz), clock running at 400 kHz, maximum DAC update rate is limited to 22.22 KSPS. Once a stop condition is received DAC5574 releases the I²C bus and awaits a new start condition.

Address Byte

MSB							LSB
1	0	0	1	1	A1	A0	R/$\overline{W}$

The address byte is the first byte received following the START condition from the master device. The first five bits (MSBs) of the address are factory preset to 10011. The next two bits of the address are the device select bits A1 and A0. The A1, A0 address inputs can be connected to V_{DD} or digital GND, or can be actively driven by TTL/CMOS logic levels. The device address is set by the state of these pins during the power-up sequence of the DAC5574. Up to 4 devices (DAC5574) can still be connected to the same I²C-Bus.

Broadcast Address Byte

MSB							LSB
1	0	0	1	0	0	0	0

Broadcast addressing is also supported by DAC5574. Broadcast addressing can be used for synchronously updating or powering down multiple DAC5574 devices. DAC5574 is designed to work with other members of the DAC857x and DAC757x families to support multichannel synchronous update. Using the broadcast address, DAC5574 responds regardless of the states of the address pins. Broadcast is supported only in write mode (Master writes to DAC5574).

Control Byte

MSB							LSB
0	0	L1	L0	X	Sel1	Sel0	PD0

Table 1. Control Register Bit Descriptions

Bit Name	Bit Number/Description		
L1	Load1 (Mode Select) Bit		Are used for selecting the update mode.
L2	Load0 (Mode Select) Bit		
	00	Store I^2C data. The contents of MS-BYTE and LS-BYTE (or power down information) are stored in the temporary register of a selected channel. This mode does not change the DAC output of the selected channel.	
	01	Update selected DAC with I^2C data. Most commonly utilized mode. The contents of MS-BYTE and LS-BYTE (or power down information) are stored in the temporary register and in the DAC register of the selected channel. This mode changes the DAC output of the selected channel with the new data.	
	10	4-Channel synchronous update. The contents of MS-BYTE and LS-BYTE (or power down information) are stored in the temporary register and in the DAC register of the selected channel. Simultaneously, the other three channels get updated with previously stored data from the temporary register. This mode updates all four channels together.	
	11	Broadcast update mode. This mode has two functions. In broadcast mode, DAC5574 responds regardless of local address matching, and channel selection becomes irrelevant as all channels update. This mode is intended to enable up to 16 channels simultaneous update, if used with the I^2C broadcast address (1001 0000).	
		If Sel1=0	All four channels are updated with the contents of their temporary register data.
		If Sel1=1	All four channels are updated with the MS-BYTE and LS-BYTE data or powerdown.
Sel1	Buff Sel1 Bit		Channel Select Bits
Sel0	Buff Sel0 Bit		
	00	Channel A	
	01	Channel B	
	10	Channel C	
	11	Channel D	
PD0	Power Down Flag		
	0	Normal operation	
	1	Power-down flag (MSB7 and MSB6 indicate a power-down operation, as shown in Table 2).	

Table 2. Control Byte

C7	C6	C5	C4	C3	C2	C1	C0	MSB7	MSB6	MSB5...	DESCRIPTION
0	0	Load1	Load0	Don't Care	Ch Sel 1	Ch Sel 0	PD0	MSB (PD1)	MSB-1 (PD2)	MSB-2 ...LSB	
(Address Select)											
		0	0	X	0	0	0	Data			Write to temporary register A (TRA) with data
		0	0	X	0	1	0	Data			Write to temporary register B (TRB) with data
		0	0	X	1	0	0	Data			Write to temporary register C (TRC) with data
		0	0	X	1	1	0	Data			Write to temporary register D (TRD) with data
		0	0	X	(00, 01, 10, or 11)		1	see Table 8		0	Write to TRx (selected by C2 &C1 w/Powerdown Com-mand
		0	1	X	(00, 01, 10, or 11)		0	Data			Write to TRx (selected by C2 &C1 and load DACx w/data
		0	1	X	(00, 01, 10, or 11)		1	see Table 8		0	Power-down DACx (selected by C2 and C1)
		1	0	X	(00, 01, 10, or 11)		0	Data			Write to TRx (selected by C2 &C1 w/ data and load all DACs
		1	0	X	(00, 01, 10, or 11)		1	see Table 8		0	Power-down DACx (selected by C2 and C1) & load all DACs
Broadcast Modes (controls up to 4 devices on a single serial bus)											
X	X	1	1	X	0	X	X	X			Update all DACs, all devices with previously stored TRx data
X	X	1	1	X	1	X	0	Data			Update all DACs, all devices with MSB[7:0] and LSB[7:0] data
X	X	1	1	X	1	X	1	see Table 8		0	Power-down all DACs, all devices

Most Significant Byte

Most significant byte MSB[7:0] consists of eight most significant bits of 8-bit unsigned binary D/A conversion data. If C0=1, MSB[7], MSB[6] indicate a powerdown operation as shown in Table 8.

Least Significant Byte

Least significant byte LSB[7:0] consists of 8 *don't care* bits. DAC5574 updates at the falling edge of the acknowledge signal that follows the LSB[0] bit. Therefore, LSB [7:0] is needed for the update to occur.

Default Readback Condition

If the user initiates a readback of a specified channel without first writing data to that specified channel, the default readback is all zeros, since the readback register is initialized to 0 during the power on reset phase.

DAC5574 Registers

Table 3. DAC5574 Architecture Register Descriptions

REGISTER	DESCRIPTION
CTRL[7:0]	Stores 8-bit wide control byte sent by the master
MSB[7:0]	Stores the 8 most significant bits of unsigned binary data sent by the master. Can also store 2-bit power-down data.
TRA[9:0], TRB[9:0], TRC[9:0], TRD[9:0]	10-bit temporary storage registers assigned to each channel. Two MSBs store power-down information, 8 LSBs store data.
DRA[9:0], DRB[9:0], DRC[9:0], DRD[9:0]	10-bit DAC registers for each channel. Two MSBs store power-down information, 8 LSBs store DAC data. An update of this register means a DAC update with data or power down.

DAC5574 as a Slave Receiver - Standard and Fast Mode

Figure 33 shows the standard and fast mode master transmitter addressing a DAC5574 *Slave Receiver* with a 7-bit address.

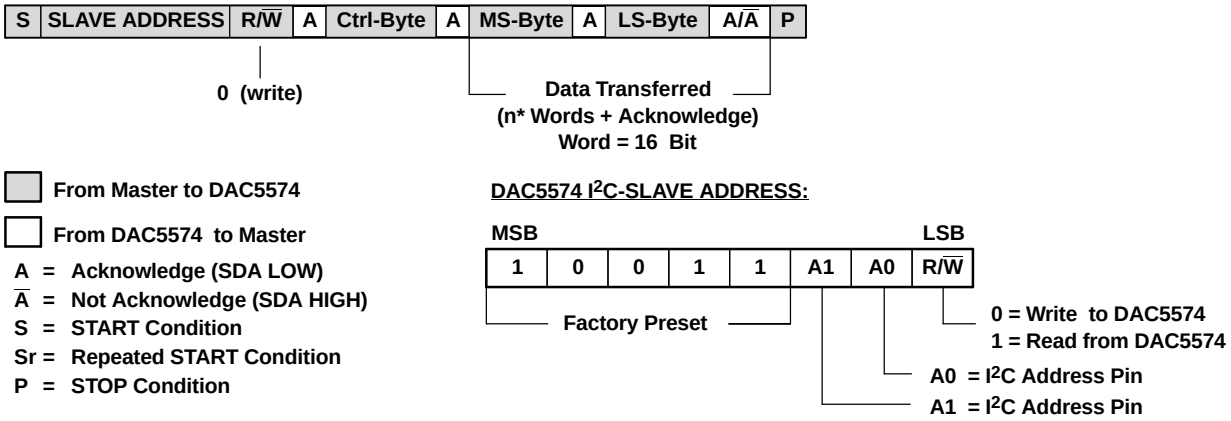

Figure 33. Standard and Fast Mode: Slave Receiver

DAC5574 as a Slave Receiver - High-Speed Mode

Figure 34 shows the high-speed mode master transmitter addressing a DAC5574 *Slave Receiver* with a 7-bit address.

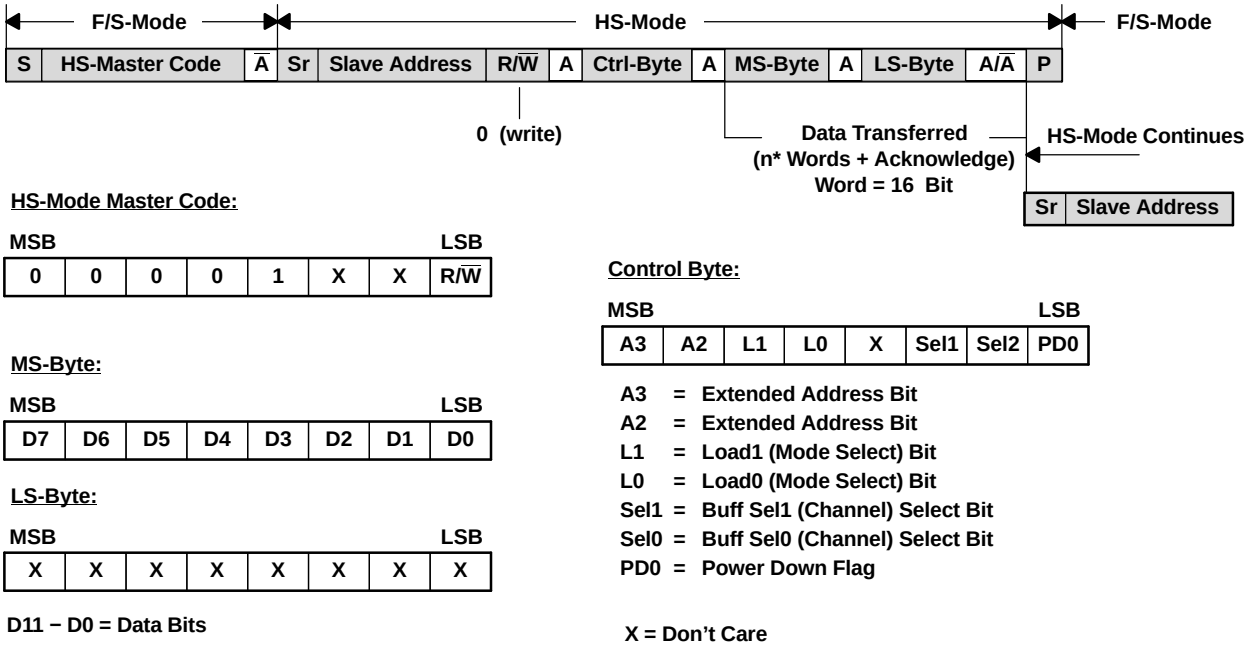

Figure 34. High-Speed Mode: Slave Receiver

Master Transmitter Writing to a Slave Receiver (DAC5574) in Standard/Fast Modes

All write access sequences begin with the device address (with R/$\overline{W}$ = 0) followed by the control byte. This control byte specifies the operation mode of DAC5574 and determines which channel of DAC5574 is being accessed in the subsequent read/write operation. The LSB of the control byte (PD0-Bit) determines if the following data is power-down data or regular data.

With (PD0-Bit = 0) the DAC5574 expects to receive data in the following sequence *HIGH-BYTE –LOW-BYTE – HIGH-BYTE – LOW-BYTE*..., until a STOP Condition or REPEATED START Condition on the I^2C-Bus is recognized (refer to the DATA INPUT MODE section of Table 4).

With (PD0-Bit = 1) the DAC5574 expects to receive 2 Bytes of power-down data (refer to the POWER DOWN MODE section of Table 4).

Table 4. Write Sequence in F/S Mode

DATA INPUT MODE									
Transmitter	**MSB**	**6**	**5**	**4**	**3**	**2**	**1**	**LSB**	**Comment**
Master	Start								Begin sequence
Master	1	0	0	1	1	A1	A0	**R/$\overline{W}$**	Write addressing (**R/$\overline{W}$=0**)
DAC5574	DAC5574 Acknowledges								
Master	0	0	Load 1	Load 0	x	Buff Sel 1	Buff Sel 0	**PD0**	Control byte (**PD0=0**)
DAC5574	DAC5574 Acknowledges								
Master	D7	D6	D5	D4	D3	D2	D1	D0	Writing data word, high byte
DAC5574	DAC5574 Acknowledges								
Master	x	x	x	x	x	x	x	x	Writing data word, low byte
DAC5574	DAC5574 Acknowledges								
Master	Data or Stop or Repeated Start(1)								Data or done(2)
POWER DOWN MODE									
Transmitter	MSB	6	5	4	3	2	1	LSB	Comment
Master	Start								Begin sequence
Master	1	0	0	1	1	A1	A0	**R/$\overline{W}$**	Write addressing **(R/$\overline{W}$=0**)
DAC5574	DAC5574 Acknowledges								
Master	0	0	Load 1	Load 0	x	Buff Sel 1	Buff Sel 0	**PD0**	Control byte (**PD0 = 1**)
DAC5574	DAC5574 Acknowledges								
Master	PD1	PD2	0	0	0	0	0	0	Writing data word, high byte
DAC5574	DAC5574 Acknowledges								
Master	x	x	x	x	x	x	x	x	Writing data word, low byte
DAC5574	DAC5574 Acknowledges								
Master	Stop or Repeated Start(1)								Done

(1) Use repeated START to secure bus operation and loop back to the stage of write addressing for next Write.
(2) Once DAC5574 is properly addressed and control byte is sent, HIGH–BYTE–LOW–BYTE sequences can repeat until a STOP condition or repeated START condition is received.

Master Transmitter Writing to a Slave Receiver (DAC5574) in HS Mode

When writing data to the DAC5574 in HS-mode, the master begins to transmit what is called the *HS-Master Code* (0000 1XXX) in F/S-mode. No device is allowed to acknowledge the *HS-Master Code*, so the *HS-Master Code* is followed by a NOT acknowledge.

The master then *switches* to HS-mode and issues a *repeated start* condition, followed by the address byte (with R/$\overline{W}$ = 0) after which the DAC5574 acknowledges by pulling SDA low. This address byte is usually followed by the control byte, which is also acknowledged by the DAC5574. The LSB of the control byte (PD0-Bit) determines if the following data is *power-down data* or regular data.

With (PD0-Bit = 0) the DAC5574 expects to receive data in the following sequence HIGH-BYTE – LOW-BYTE – HIGH-BYTE – LOW-BYTE...., until a STOP condition or *repeated start* condition on the I^2C-Bus is recognized (refer to Table 5 HS-MODE WRITE SEQUENCE - DATA).

With (PD0-Bit = 1) the DAC5574 expects to receive 2 bytes of power-down data (refer to Table 5 HS-MODE WRITE SEQUENCE - POWER DOWN).

Table 5. Master Transmitter Writes to Slave Receiver (DAC5574) in HS-Mode

HS MODE WRITE SEQUENCE - DATA									
Transmitter	MSB	6	5	4	3	2	1	LSB	Comment
Master	Start								Begin sequence
Master	0	0	0	0	1	X	X	X	HS Mode Master Code
NONE	Not Acknowledge								No device may acknowledge HS master code
Master	Repeated Start								
Master	1	0	0	1	1	A1	A0	**R/$\overline{W}$**	Write addressing (**R/$\overline{W}$=0**)
DAC5574	DAC5574 Acknowledges								
Master	0	0	Load 1	Load 0	0	Buff Sel 1	Buff Sel 0	**PD0**	Control byte (**PD0=0**)
DAC5574	DAC5574 Acknowledges								
Master	D7	D6	D5	D4	D3	D2	D1	D0	Writing data word, MSB
DAC5574	DAC5574 Acknowledges								
Master	x	x	x	x	x	x	x	x	Writing data word, LSB
DAC5574	DAC5574 Acknowledges								
Master	Data or Stop or Repeated Start(1)								Data or done (2)
HS MODE WRITE SEQUENCE - POWER DOWN									
Transmitter	MSB	6	5	4	3	2	1	LSB	Comment
Master	Start								Begin sequence
Master	0	0	0	0	1	X	X	X	HS Mode Master Code
NONE	Not Acknowledge								No device may acknowledge HS master code
Master	Repeated Start								
Master	1	0	0	1	1	A1	A0	**R/$\overline{W}$**	Write addressing (**R/$\overline{W}$ = 0**)
DAC5574	DAC5574 Acknowledges								
Master	0	0	Load 1	Load 2	0	Buff Sel 1	Buff Sel 0	**PD0**	Control Byte (**PD0=1**)
DAC5574	DAC5574 Acknowledges								
Master	PD1	PD2	0	0	0	0	0	0	Writing data word, high byte
DAC5574	DAC5574 Acknowledges								
Master	x	x	x	x	x	x	x	x	Writing data word, low byte
DAC5574	DAC5574 Acknowledges								
Master	Stop or repeated start(1)								Done

(1) Use repeated start to secure bus operation and loop back to the stage of write addressing for next Write.
(2) Once DAC5574 is properly addressed and control byte is sent, high-byte-low-byte sequences can repeat until a stop or repeated start condition is received.

DAC5574 as a Slave Transmitter - Standard and Fast Mode

Figure 35 shows the standard and fast mode master transmitter addressing a DAC5574 *Slave Transmitter* with a 7-bit address.

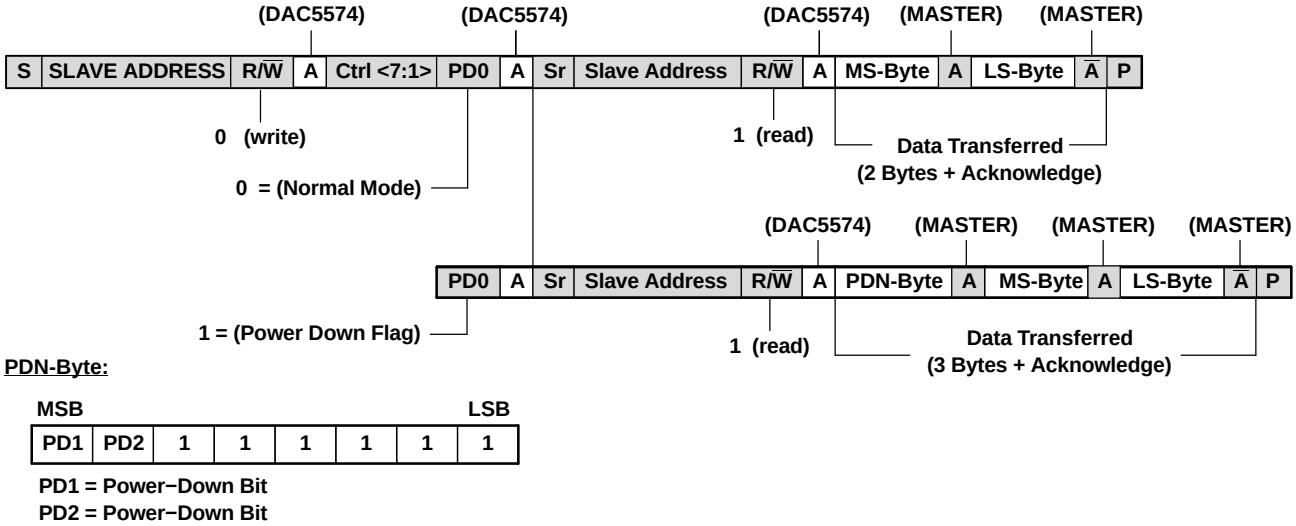

Figure 35. Standard and Fast Mode: Slave Transmitter

DAC5574 as a Slave Transmitter - High-Speed Mode

Figure 36 shows an I^{2}C-Master addressing DAC5574 in high-speed mode (with a 7-bit address), as a *Slave Transmitter*.

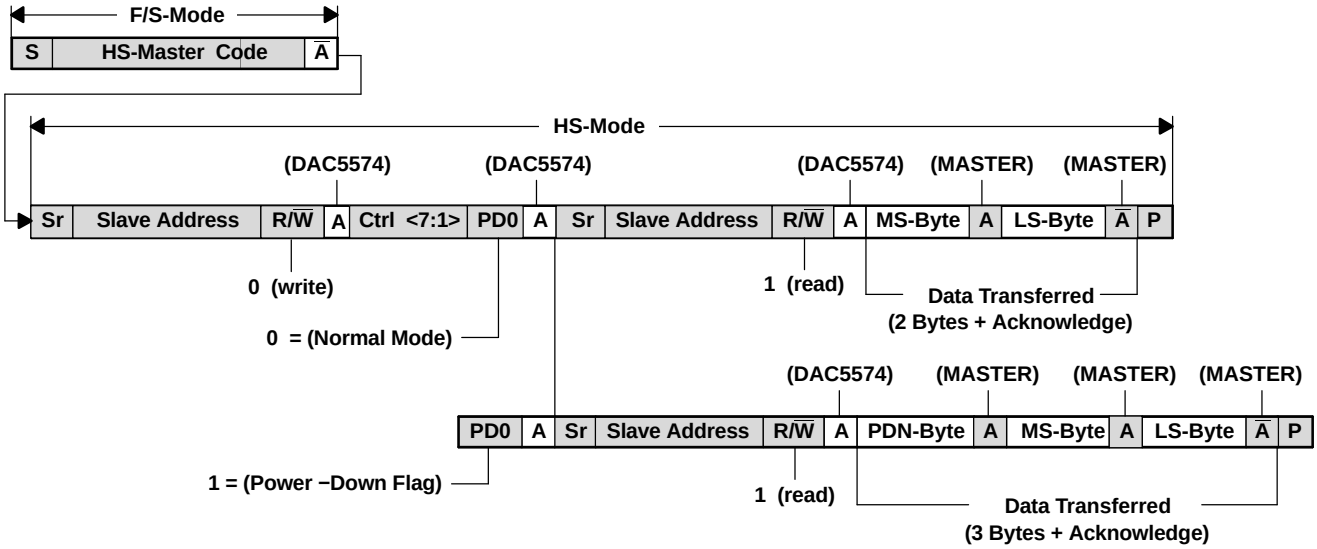

Figure 36. High-Speed Mode: Slave Transmitter

Master Receiver Reading From a Slave Transmitter (DAC5574) in Standard/Fast Modes

When reading data back from the DAC5574, the user begins with an address byte (with R/$\overline{W}$ = 0) after which the DAC5574 will acknowledge by pulling SDA low. This address byte is usually followed by the Control Byte, which is also acknowledged by the DAC5574. Following this there is a REPEATED START condition by the Master and the address is resent with (R/$\overline{W}$ = 1). This is acknowledged by the DAC5574, indicating that it is prepared to transmit data. Two or three bytes of data are then read back from the DAC5574, depending on the (PD0-Bit). The value of *Buff-Sel1* and *Buff-Sel0* determines, which channel data is read back. A STOP Condition follows.

With the (PD0-Bit = 0) the DAC5574 transmits 2 bytes of data, *HIGH-BYTE* followed by the *LOW-BYTE* (refer to Table 2. Data Readback Mode - 2 bytes).

With the (PD0-Bit = 1) the DAC5574 transmits 3 bytes of data, *POWER-DOWN-BYTE* followed by the *HIGH-BYTE* followed by the *LOW-BYTE* (refer to Table 2. Data Readback Mode - 3 bytes).

Table 6. Read Sequence in F/S Mode

DATA READBACK MODE - 2 BYTES									
Transmitter	**MSB**	**6**	**5**	**4**	**3**	**2**	**1**	**LSB**	**Comment**
Master	Start								Begin sequence
Master	1	0	0	1	1	A1	A0	**R/$\overline{W}$**	Write addressing (**R/$\overline{W}$=0**)
DAC5574	DAC5574 Acknowledges								
Master	0	0	Load 1	Load 0	x	Buff Sel 1	Buff Sel 0	**PD0**	Control byte (**PD0=0**)
DAC5574	DAC5574 Acknowledges								
Master	Repeated Start								
Master	1	0	0	1	1	A1	A0	**R/$\overline{W}$**	Read addressing (**R/$\overline{W}$ = 1**)
DAC5574	DAC5574 Acknowledges								
DAC5574	D7	D6	D5	D4	D3	D2	D1	D0	Reading data word, high byte
Master	Master Acknowledges								
DAC5574	x	x	x	x	x	x	x	x	Reading data word, low byte
Master	Master Not Acknowledges								Master signal end of read
Master	Stop or Repeated Start(1)								Done
DATA READBACK MODE - 3 BYTES									
Transmitter	MSB	6	5	4	3	2	1	LSB	Comment
Master	Start								Begin sequence
Master	1	0	0	1	1	A1	A0	**R/$\overline{W}$**	Write addressing (**R/$\overline{W}$=0**)
DAC5574	DAC5574 Acknowledges								
Master	0	0	Load 1	Load 0	x	Buff Sel 1	Buff Sel 0	**PD0**	Control byte (**PD0=1**)
DAC5574	DAC5574 Acknowledges								
Master	Repeated Start								
Master	1	0	0	1	1	A1	A0	**R/$\overline{W}$**	Read addressing (**R/$\overline{W}$ = 1**)
DAC5574	DAC5574 Acknowledges								
DAC5574	PD1	PD2	1	1	1	1	1	1	Read power down byte
Master	Master Acknowledges								
DAC5574	D7	D6	D5	D4	D3	D2	D1	D0	Reading data word, high byte
Master	Master Acknowledges								
DAC5574	x	x	x	x	x	x	x	x	Reading data word, low byte
Master	Master Not Acknowledges								Master signal end of read
Master	Stop or Repeated Start(1)								Done

(1) Use repeated start to secure bus operation and loop back to the stage of write addressing for next Write.

Master Receiver Reading From a Slave Transmitter (DAC5574) in HS-Mode

When reading data to the DAC5574 in HS-MODE, the master begins to transmit, what is called the *HS-Master Code* (0000 1XXX) in F/S-mode. No device is allowed to acknowledge the *HS-Master Code*, so the *HS-Master Code* is followed by a NOT acknowledge.

The Master then *switches* to HS-mode and issues a REPEATED START condition, followed by the address byte (with R/$\overline{W}$ = 0) after which the DAC5574 acknowledges by pulling SDA low. This address byte is usually followed by the control byte, which is also acknowledged by the DAC5574.

Then there is a REPEATED START condition initiated by the master and the address is resent with (R/$\overline{W}$ = 1). This is acknowledged by the DAC5574, indicating that it is prepared to transmit data. Two or Three bytes of data are then read back from the DAC5574, depending on the (PD0-Bit). The value of *Buff-Sel1* and *Buff-Sel0* determines, which channel data is read back. A STOP condition follows.

With the (PD0-Bit = 0) the DAC5574 transmits 2 bytes of data, *HIGH-BYTE* followed by *LOW-BYTE* (refer to Table 7 HS-Mode Readback Sequence).

With the (PD0-Bit = 1) the DAC5574 transmits 3 bytes of data, *POWER-DOWN-BYTE* followed by the *HIGH-BYTE* followed by the *LOW-BYTE* (refer to Table 7 HS-Mode Readback Sequence).

Table 7. Master Receiver Reading Slave Transmitter (DAC5574) in HS-Mode

HS MODE READBACK SEQUENCE									
Transmitter	**MSB**	**6**	**5**	**4**	**3**	**2**	**1**	**LSB**	**Comment**
Master	Start								Begin sequence
Master	0	0	0	0	1	X	X	X	HS Mode Master Code
NONE	Not Acknowledge								No device may acknowledge HS master code
Master	Repeated Start								
Master	1	0	0	1	1	A1	A0	**R/$\overline{W}$**	Write addressing (**R/$\overline{W}$=0**)
DAC5574	DAC5574 Acknowledges								
Master	0	0	Load 1	Load 0	X	Buff Sel 1	Buff Sel 0	**PD0**	Control byte (**PD0 = 1**)
DAC5574	DAC5574 Acknowledges								
Master	Repeated Start								
Master	1	0	0	1	1	A1	A0	**R/$\overline{W}$**	Read addressing (**R/$\overline{W}$=1**)
DAC5574	DAC5574 Acknowledges								
DAC5574	PD1	PD2	1	1	1	1	1	1	Power-down byte
Master	Master Acknowledges								
DAC5574	D7	D6	D5	D4	D3	D2	D1	D0	Reading data word, high byte
Master	Master Acknowledges								
DAC5574	x	x	x	x	x	x	x	x	Reading data word, low byte
Master	Master Not Acknowledges								Master signal end of read
Master	Stop or Repeated Start								Done

Power-On Reset

The DAC5574 contains a power-on-reset circuit that controls the output voltage during power up. On power up, the DAC register is filled with zeros and the output voltage is 0 V; it remains there until a valid write sequence is made to the DAC. This is useful in applications where it is important to know the state of the output of the DAC while it is in the process of powering up. No device pin should be brought high before supply is applied.

Power-Down Modes

The DAC5574 contains four separate power-down modes of operation. The modes are programmable via two most significant bits of the MSB byte, while (CTRL[0] = PD0 = 1). Table 8 shows how the state of these bits correspond to the mode of operation of the device.

Table 8. Power-Down Modes of Operation for the DAC5574

CTRL[0]	MSB[7]	MSB[6]	OPERATING MODE
1	0	0	High Impedance Output
1	0	1	1 kΩ to GND
1	1	0	100 kΩ to GND
1	1	1	High Impedance

When (CTRL[0] = PD0 = 0), the device works normally with its normal power consumption of 150 µA at 5 V per channel. However, for the power-down modes, the supply current falls to 200 nA at 5 V (50 nA at 3 V). Not only does the supply current fall but also the output stage is also internally switched from the output of the amplifier to a resistor network of known values. This has the advantage that the output impedance of the device is known while in power-down mode. There are three different options: The output is connected internally to GND through a 1-kΩ resistor, a 100-kΩ resistor or left open-circuit (high impedance). The output stage is illustrated in Figure 37.

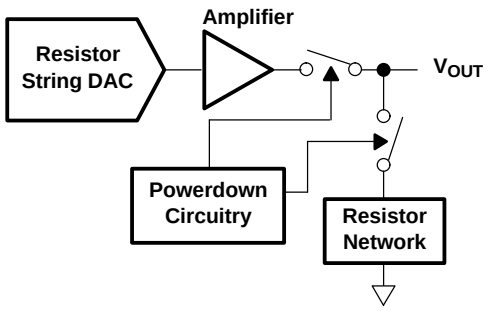

Figure 37. Output Stage During Power Down

All linear circuitry is shut down when the power-down mode is activated. However, the contents of the DAC register are unaffected when in power-down. The time to exit power down is typically 2.5 µs for V_{DD} = 5 V and 5 µs for V_{DD} = 3 V. (See the Typical Curves section for additional information.)

The DAC5574 offers a flexible power-down interface based on channel register operation. A channel consists of a single 8-bit DAC with power-down circuitry, a temporary storage register (TR) and a DAC register (DR). TR and DR are both 10 bits wide. Two MSBs represent the power-down condition and the 8 LSBs represent data for TR and DR. By using bits 9 and 8 of TR and DR, a power-down condition can be temporarily stored and used just like data. Internal circuits ensure that MSB[7] and MSB[6] get transferred to TR[9] and TR[8] (DR[9] and DR[8]) when the power-down flag (CTRL[0] = PD0) is set. Therefore, DAC5574 treats power-down conditions like data and all the operational modes are still valid for power down. It is possible to broadcast a power-down condition to all the DAC5574s in the system, or it is possible to simultaneously power down a channel while updating data on other channels.

CURRENT CONSUMPTION

The DAC5574 typically consumes 150µA at V_{DD} = 5 V and 125µA at V_{DD} = 3 V for each active channel, including reference current consumption. Additional current consumption can occur at the digital inputs if $V_{IH} << V_{DD}$. For most efficient power operation, CMOS logic levels are recommended at the digital inputs to the DAC. In power-down mode, typical current consumption is 200 nA.

DRIVING RESISTIVE AND CAPACITIVE LOADS

The DAC5574 output stage is capable of driving loads of up to 1000 pF while remaining stable. Within the offset and gain error margins, the DAC5574 can operate rail-to-rail when driving a capacitive load. Resistive loads of 2 kΩ can be driven by the DAC5574 while achieving a good load regulation. When the outputs of the DAC are driven to the positive rail under resistive loading, the PMOS transistor of each Class-AB output stage can enter into the linear region. When this occurs, the added IR voltage drop deteriorates the linearity performance of the DAC. This only occurs within approximately the top 20 mV of the DAC's digital input-to-voltage output transfer characteristic.

CROSSTALK

The DAC5574 architecture uses separate resistor strings for each DAC channel in order to achieve ultra-low crosstalk performance. DC crosstalk seen at one channel during a full-scale change on the neighboring channel is typically less than 0.0025 LSBs. The ac crosstalk measured (for a full-scale, 1 kHz sine wave output generated at one channel, and measured at the remaining output channel) is typically under –100 dB.

OUTPUT VOLTAGE STABILITY

The DAC5574 exhibits excellent temperature stability of ±3 ppm/°C typical output voltage drift over the specified temperature range of the device. This enables the output voltage of each channel to stay within a ±25 µV window for a ±1°C ambient temperature change. Combined with good dc noise performance and true 8-bit differential linearity, the DAC5574 becomes a perfect choice for closed-loop control applications.

SETTLING TIME AND OUTPUT GLITCH PERFORMANCE

Settling time to within the 8-bit accurate range of the DAC5574 is achievable within 6 µs for a full-scale code change at the input. Worst case settling times between consecutive code changes is typically less than 2 µs. The high-speed serial interface of the DAC5574 is designed in order to support up to 188 kSPS update rate. For full-scale output swings, the output stage of each DAC5574 channel typically exhibits less than 100 mV of overshoot and undershoot when driving a 200 pF capacitive load. Code-to-code change glitches are extremely low (~10 µV) given that the code-to-code transition does not cross an Nx16 code boundary. Due to internal segmentation of the DAC5574, code-to-code glitches occur at each crossing of an Nx16 code boundary. These glitches can approach 100 mVs for N = 15, but settle out within ~2 µs. Sufficient bypass capacitance is required to ensure 10 µs settling under capacitive loading. To observe the settling performance under resistive load conditions, the power supply (hence DAC5574 reference supply) must settle quicker than the DAC5574.

APPLICATION INFORMATION

The following sections give example circuits and tips for using the DAC5574 in various applications. For more information, contact your local TI representative, or visit the Texas Instruments website at http://www.ti.com.

BASIC CONNNECTIONS

For many applications, connecting the DAC5574 is extremely simple. A basic connection diagram for the DAC5574 is shown in Figure 38. The 0.1 µF bypass capacitors help provide the momentary bursts of extra current needed from the supplies.

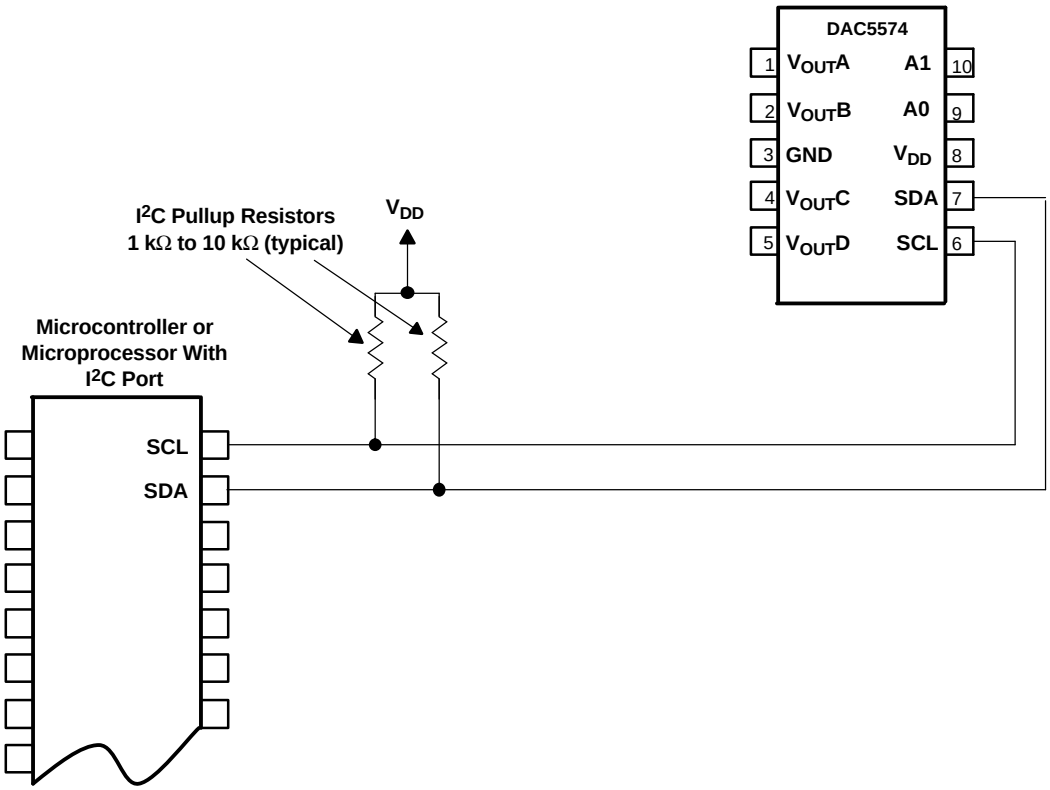

NOTE: DAC5574 power and input/output connections are omitted for clarity, except I^2C Inputs.

Figure 38. Typical DAC5574 Connections

The DAC5574 interfaces directly to standard mode, fast mode and high-speed mode I^2C controllers. Any microcontroller's I^2C peripheral, including master-only and non-multiple-master I^2C peripherals, work with the DAC5574. The DAC5574 does not perform clock-stretching (i.e., it never pulls the clock line low), so it is not necessary to provide for this unless other devices are on the same I^2C bus.

Pullup resistors are necessary on both the SDA and SCL lines because I^2C bus drivers are open-drain. The size of the these resistors depend on the bus operating speed and capacitance on the bus lines. Higher-value resistors consume less power, but increase the transition times on the bus, limiting the bus speed. Lower-value resistors allow higher speed at the expense of higher power consumption. Long bus lines have higher capacitance and require smaller pullup resistors to compensate. If the pullup resistors are too small the bus drivers may not be able to pull the bus line low.

USING GPIO PORTS FOR I^2C

Most microcontrollers have programmable input/output pins that can be set in software to act as inputs or outputs. If an I^2C controller is not available, the DAC5574 can be connected to GPIO pins, and the I^2C bus protocol simulated, or bit-banged, in software. An example of this for a single DAC5574 is shown in Figure 39.

APPLICATION INFORMATION (continued)

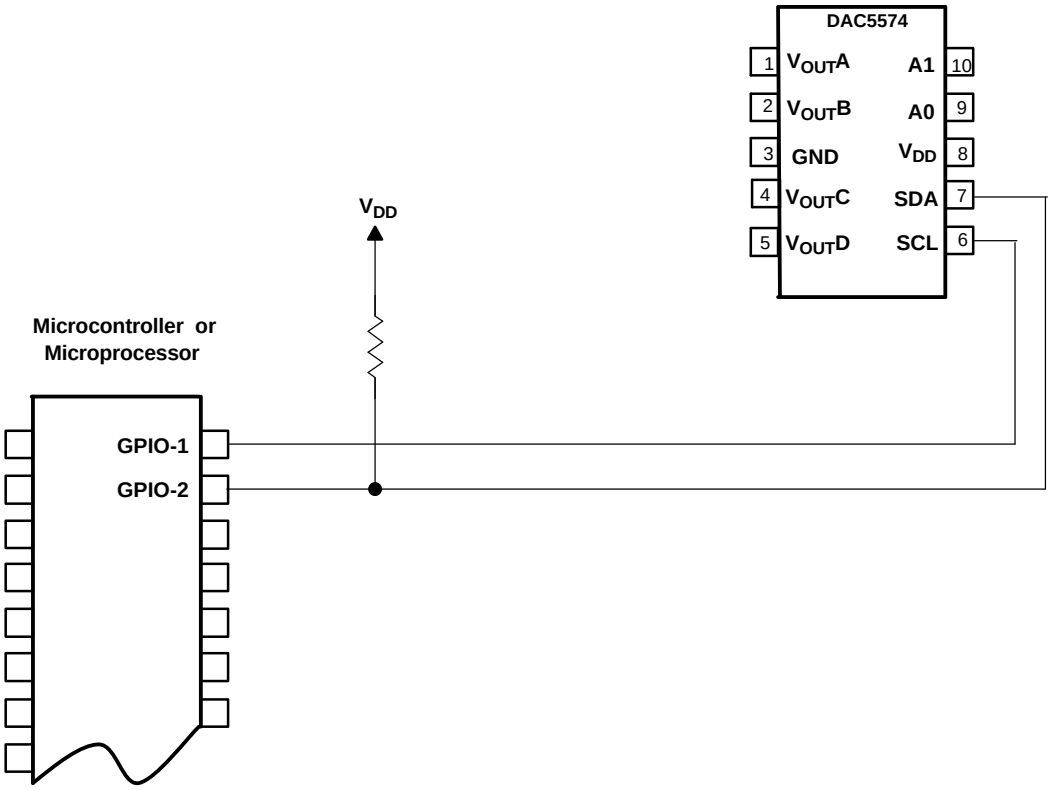

NOTE: DAC5574 power and input/output connections are omitted for clarity, except I^2C Inputs.

Figure 39. Using GPIO With a Single DAC5574

Bit-banging I^2C with GPIO pins can be done by setting the GPIO line to zero and toggling it between input and output modes to apply the proper bus states. To drive the line low, the pin is set to output a zero; to let the line go high, the pin is set to input. When the pin is set to input, the state of the pin can be read; if another device is pulling the line low, this reads as a zero in the port's input register.

Note that no pullup resistor is shown on the SCL line. In this simple case the resistor is not needed. The microcontroller can simply leave the line on output, and set it to one or zero as appropriate. It can do this because the DAC5574 never drives its clock line low. This technique can also be used with multiple devices, and has the advantage of lower current consumption due to the absence of a resistive pullup.

If there are any devices on the bus that may drive their clock lines low, the above method should not be used. The SCL line should be high-Z or zero, and a pullup resistor provided as usual. Note also that this cannot be done on the SDA line in any case, because the DAC5574 drives the SDA line low from time to time, as all I^2C devices do.

Some microcontrollers have selectable strong pullup circuits built in to their GPIO ports. In some cases, these can be switched on and used in place of an external pullup resistor. Weak pullups are also provided on some microcontrollers, but usually these are too weak for I^2C communication. Test any circuit before committing it to production.

POWER SUPPLY REJECTION

The positive reference voltage input of DAC5574 is internally tied to the power supply pin of the device. This increases I^2C system flexibility, creating room for an extra I^2C address pin in a low pin-count package. To eliminate the supply noise appearing at the DAC output, the user must pay close attention to how DAC5574 is powered. The supply to DAC5574 must be clean and well regulated. For best performance, use of a precision voltage reference is recommended to supply power to DAC5574. This is equivalent to providing a precision

APPLICATION INFORMATION (continued)

external reference to the device. Due to low power consumption of DAC5574, load regulation errors are negligible. In order to avoid excess power consumption at the Schmitt-triggered inputs of DAC5574, the precision reference voltage should be close to the I^2C bus pullup voltage. For 3-V, 3.3-V and 5-V I^2C bus pullup voltages, REF2930, REF2933 and REF02 precision voltage references are recommended respectively. These precision voltage references can be used to supply power for multiple devices on a system.

USING REF02 AS A POWER SUPPLY FOR DAC5574

Due to the extremely low supply current required by the DAC5574, a possible configuration is to use a REF02 +5 V precision voltage reference to supply the required voltage to the DAC5574's supply input as well as the reference input, as shown in Figure 40. This is especially useful if the power supply is quite noisy or if the system supply voltages are at some value other than 5 V. The REF02 outputs a steady supply voltage for the DAC5574. If the REF02 is used, the current it needs to supply to the DAC5574 is 600 µA typical and 900 µA max for V_{DD} = 5 V. When a DAC output is loaded, the REF02 also needs to supply the current to the load. The total typical current required (with a 5-kΩ load on a single DAC output) is:

600 µA + (5 V / 5 kΩ) = 1.6 mA

The load regulation of the REF02 is typically 0.005%/mA, which results in an error of 400µV for 1.6-mA of current drawn from it. This corresponds to a 0.02 LSB error for a 0 V to 5 V output range.

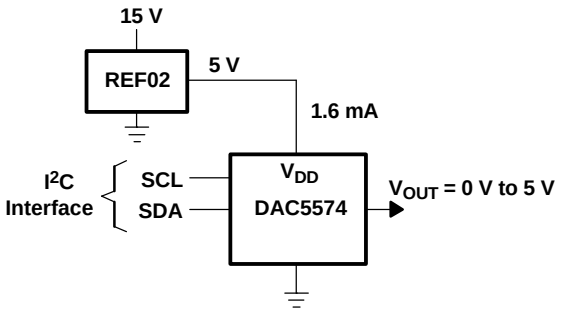

Figure 40. REF02 Power Supply

LAYOUT

A precision analog component requires careful layout, adequate bypassing, and clean, well-regulated power supplies.

The power applied to V_{DD} should be well-regulated and low noise. Switching power supplies and dc/dc converters often have high-frequency glitches or spikes riding on the output voltage. In addition, digital components can create similar high-frequency spikes as their internal logic switches states. This noise can easily couple into the DAC output voltage through various paths between the power connections and analog output.

As with the GND connection, V_{DD} should be connected to a positive power-supply plane or trace that is separate from the connection for digital logic until they are connected at the power-entry point. In addition, a 1-µF to 10-µF capacitor in parallel with a 0.1-µF bypass capacitor is strongly recommended. In some situations, additional bypassing may be required, such as a 100-µF electrolytic capacitor or even a Pi filter made up of inductors and capacitors—all designed to essentially low-pass filter the –5 V supply, removing the high-frequency noise.

PACKAGING INFORMATION

Orderable Device	Status (1)	Package Type	Package Drawing	Pins	Package Qty	Eco Plan (2)	Lead/Ball Finish (6)	MSL Peak Temp (3)	Op Temp (°C)	Device Marking (4/5)	Samples
DAC5574IDGS	ACTIVE	VSSOP	DGS	10	80	Green (RoHS & no Sb/Br)	NIPDAUAG	Level-2-260C-1 YEAR	-40 to 105	D574	Samples
DAC5574IDGSR	ACTIVE	VSSOP	DGS	10	2500	Green (RoHS & no Sb/Br)	NIPDAUAG	Level-2-260C-1 YEAR	-40 to 105	D574	Samples

(1) The marketing status values are defined as follows:
ACTIVE: Product device recommended for new designs.
LIFEBUY: TI has announced that the device will be discontinued, and a lifetime-buy period is in effect.
NRND: Not recommended for new designs. Device is in production to support existing customers, but TI does not recommend using this part in a new design.
PREVIEW: Device has been announced but is not in production. Samples may or may not be available.
OBSOLETE: TI has discontinued the production of the device.

(2) **RoHS:** TI defines "RoHS" to mean semiconductor products that are compliant with the current EU RoHS requirements for all 10 RoHS substances, including the requirement that RoHS substance do not exceed 0.1% by weight in homogeneous materials. Where designed to be soldered at high temperatures, "RoHS" products are suitable for use in specified lead-free processes. TI may reference these types of products as "Pb-Free".
RoHS Exempt: TI defines "RoHS Exempt" to mean products that contain lead but are compliant with EU RoHS pursuant to a specific EU RoHS exemption.
Green: TI defines "Green" to mean the content of Chlorine (Cl) and Bromine (Br) based flame retardants meet JS709B low halogen requirements of <=1000ppm threshold. Antimony trioxide based flame retardants must also meet the <=1000ppm threshold requirement.

(3) MSL, Peak Temp. - The Moisture Sensitivity Level rating according to the JEDEC industry standard classifications, and peak solder temperature.

(4) There may be additional marking, which relates to the logo, the lot trace code information, or the environmental category on the device.

(5) Multiple Device Markings will be inside parentheses. Only one Device Marking contained in parentheses and separated by a "~" will appear on a device. If a line is indented then it is a continuation of the previous line and the two combined represent the entire Device Marking for that device.

(6) Lead/Ball Finish - Orderable Devices may have multiple material finish options. Finish options are separated by a vertical ruled line. Lead/Ball Finish values may wrap to two lines if the finish value exceeds the maximum column width.

Important Information and Disclaimer: The information provided on this page represents TI's knowledge and belief as of the date that it is provided. TI bases its knowledge and belief on information provided by third parties, and makes no representation or warranty as to the accuracy of such information. Efforts are underway to better integrate information from third parties. TI has taken and continues to take reasonable steps to provide representative and accurate information but may not have conducted destructive testing or chemical analysis on incoming materials and chemicals. TI and TI suppliers consider certain information to be proprietary, and thus CAS numbers and other limited information may not be available for release.

In no event shall TI's liability arising out of such information exceed the total purchase price of the TI part(s) at issue in this document sold by TI to Customer on an annual basis.

TAPE AND REEL INFORMATION

REEL DIMENSIONS

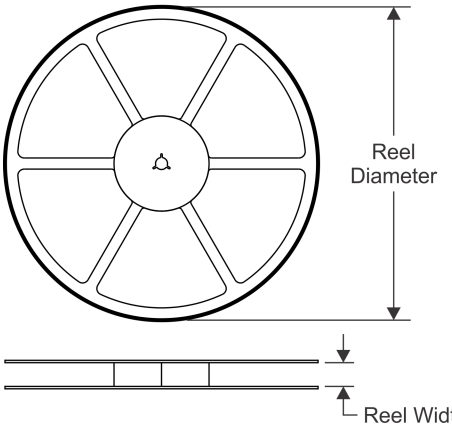

TAPE DIMENSIONS

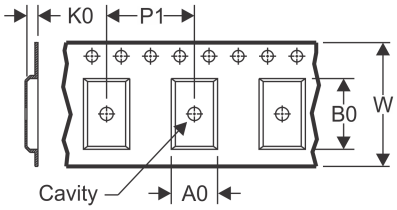

A0	Dimension designed to accommodate the component width
B0	Dimension designed to accommodate the component length
K0	Dimension designed to accommodate the component thickness
W	Overall width of the carrier tape
P1	Pitch between successive cavity centers

QUADRANT ASSIGNMENTS FOR PIN 1 ORIENTATION IN TAPE

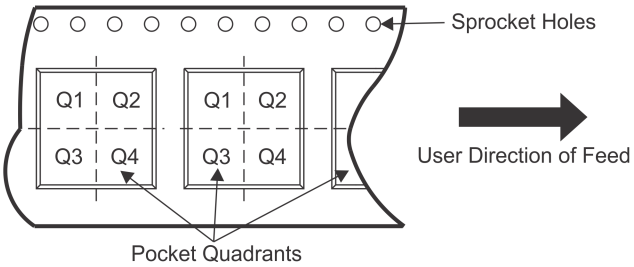

*All dimensions are nominal

Device	Package Type	Package Drawing	Pins	SPQ	Reel Diameter (mm)	Reel Width W1 (mm)	A0 (mm)	B0 (mm)	K0 (mm)	P1 (mm)	W (mm)	Pin1 Quadrant
DAC5574IDGSR	VSSOP	DGS	10	2500	330.0	12.4	5.3	3.4	1.4	8.0	12.0	Q1

TAPE AND REEL BOX DIMENSIONS

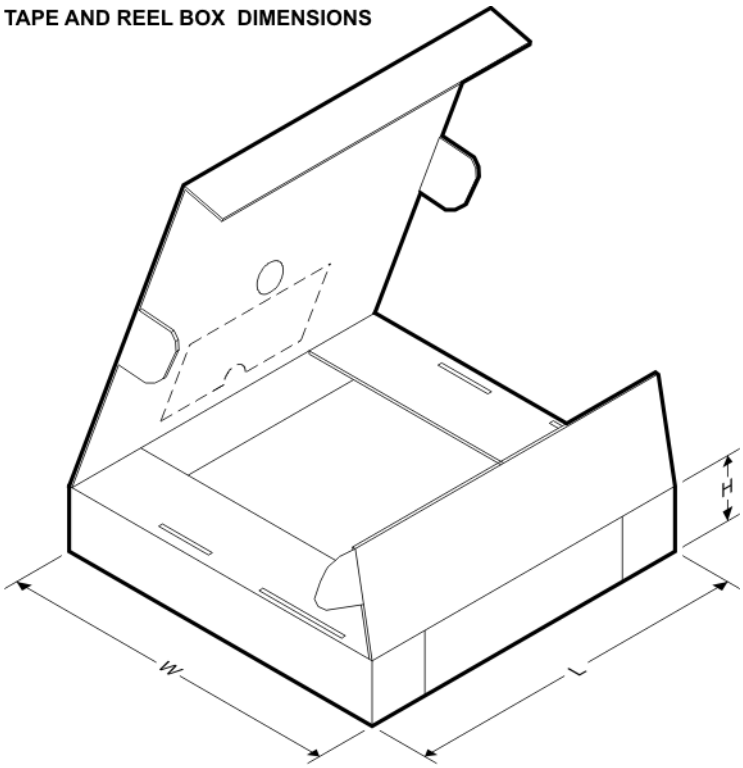

*All dimensions are nominal

Device	Package Type	Package Drawing	Pins	SPQ	Length (mm)	Width (mm)	Height (mm)
DAC5574IDGSR	VSSOP	DGS	10	2500	350.0	350.0	43.0

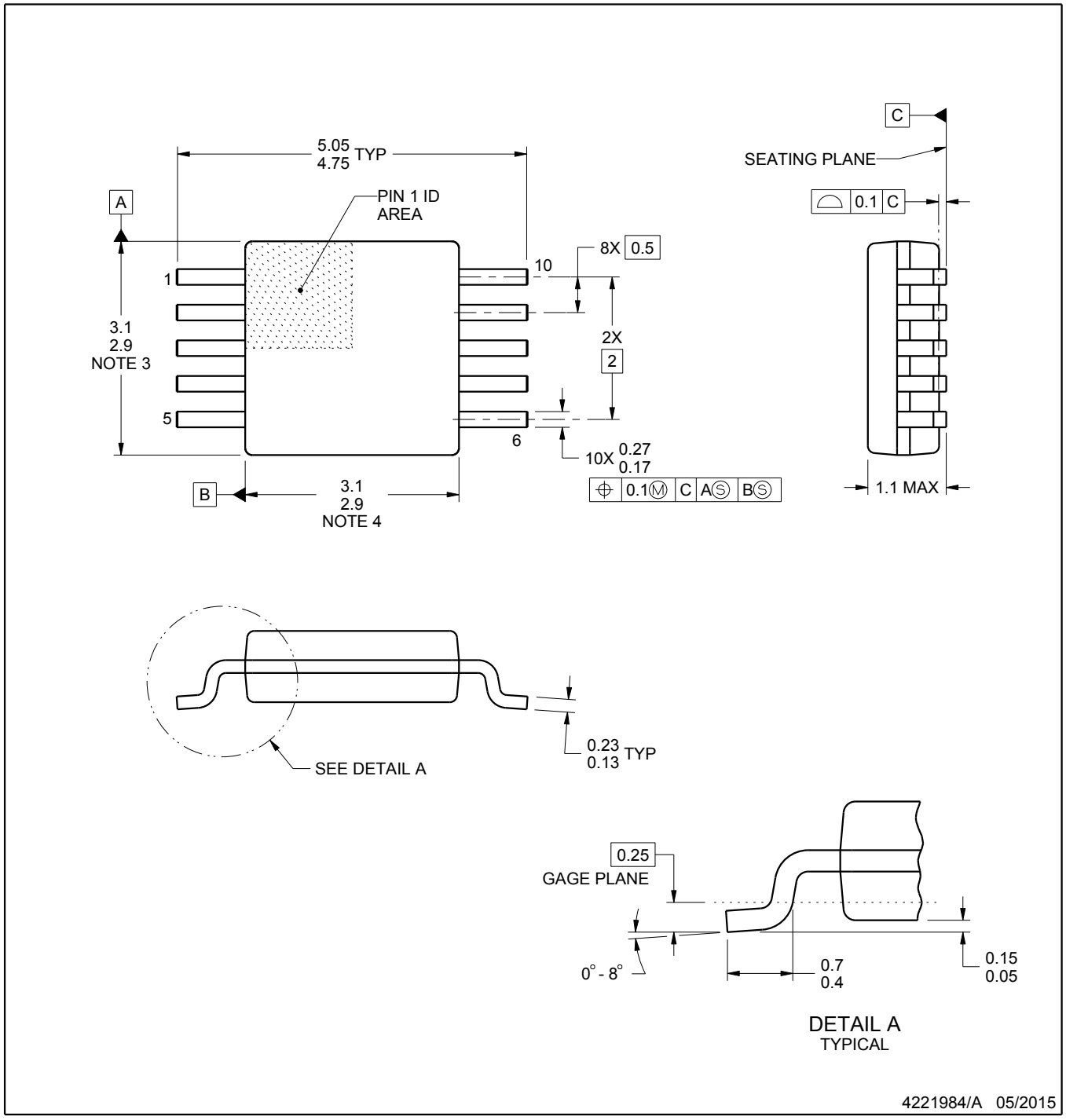

NOTES:

1. All linear dimensions are in millimeters. Any dimensions in parenthesis are for reference only. Dimensioning and tolerancing per ASME Y14.5M.
2. This drawing is subject to change without notice.
3. This dimension does not include mold flash, protrusions, or gate burrs. Mold flash, protrusions, or gate burrs shall not exceed 0.15 mm per side.
4. This dimension does not include interlead flash. Interlead flash shall not exceed 0.25 mm per side.
5. Reference JEDEC registration MO-187, variation BA.

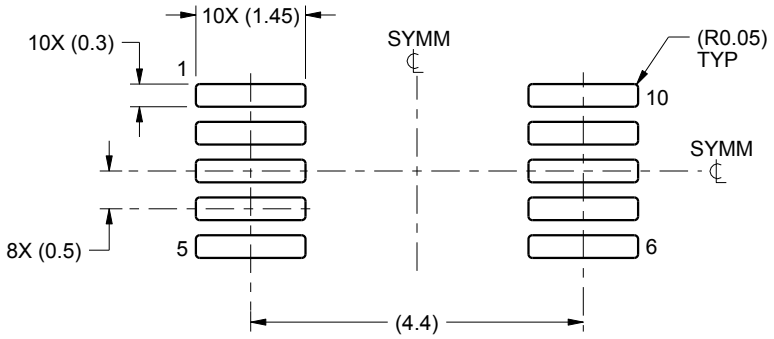

LAND PATTERN EXAMPLE
SCALE:10X

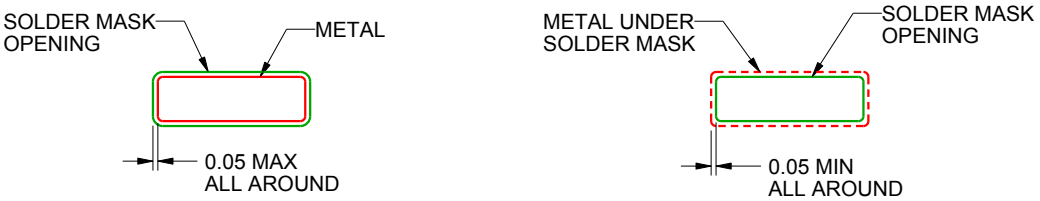

NON SOLDER MASK
DEFINED

SOLDER MASK
DEFINED

SOLDER MASK DETAILS
NOT TO SCALE

4221984/A 05/2015

NOTES: (continued)

6. Publication IPC-7351 may have alternate designs.
7. Solder mask tolerances between and around signal pads can vary based on board fabrication site.

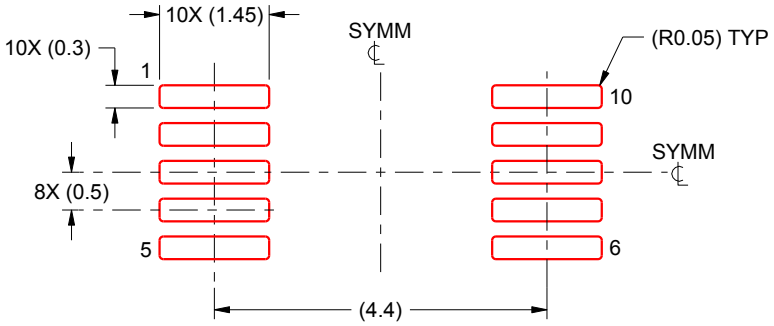

SOLDER PASTE EXAMPLE
BASED ON 0.125 mm THICK STENCIL
SCALE:10X

4221984/A 05/2015

NOTES: (continued)

8. Laser cutting apertures with trapezoidal walls and rounded corners may offer better paste release. IPC-7525 may have alternate design recommendations.
9. Board assembly site may have different recommendations for stencil design.

IMPORTANT NOTICE AND DISCLAIMER

TI PROVIDES TECHNICAL AND RELIABILITY DATA (INCLUDING DATASHEETS), DESIGN RESOURCES (INCLUDING REFERENCE DESIGNS), APPLICATION OR OTHER DESIGN ADVICE, WEB TOOLS, SAFETY INFORMATION, AND OTHER RESOURCES “AS IS” AND WITH ALL FAULTS, AND DISCLAIMS ALL WARRANTIES, EXPRESS AND IMPLIED, INCLUDING WITHOUT LIMITATION ANY IMPLIED WARRANTIES OF MERCHANTABILITY, FITNESS FOR A PARTICULAR PURPOSE OR NON-INFRINGEMENT OF THIRD PARTY INTELLECTUAL PROPERTY RIGHTS.

These resources are intended for skilled developers designing with TI products. You are solely responsible for (1) selecting the appropriate TI products for your application, (2) designing, validating and testing your application, and (3) ensuring your application meets applicable standards, and any other safety, security, or other requirements. These resources are subject to change without notice. TI grants you permission to use these resources only for development of an application that uses the TI products described in the resource. Other reproduction and display of these resources is prohibited. No license is granted to any other TI intellectual property right or to any third party intellectual property right. TI disclaims responsibility for, and you will fully indemnify TI and its representatives against, any claims, damages, costs, losses, and liabilities arising out of your use of these resources.

TI’s products are provided subject to TI’s Terms of Sale (www.ti.com/legal/termsofsale.html) or other applicable terms available either on ti.com or provided in conjunction with such TI products. TI’s provision of these resources does not expand or otherwise alter TI’s applicable warranties or warranty disclaimers for TI products.

Mailing Address: Texas Instruments, Post Office Box 655303, Dallas, Texas 75265
Copyright © 2020, Texas Instruments Incorporated