AFE031 Powerline Communications Analog Front-End

1 Features

- Integrated powerline driver with thermal and overcurrent protection
- Conforms to EN50065-1
- PRIME certified
- Large output swing: 12 V_{PP} at 1.5 A (15-V supply)
- Low power consumption: 15 mW (receive mode)
- Programmable Tx and Rx filters
- Supports EN50065 CENELEC bands A, B, C, D
- Supports FSK, S-FSK, and OFDM
- Supports PRIME, G3, IEC 61334
- Receive sensitivity: 20 μV_{RMS}, typical
- Programmable Tx and Rx gain control
- Four-wire serial peripheral interface
- Two integrated zero crossing detectors
- Two-wire transceiver buffer
- 48-Pin QFN PowerPAD™ package
- Extended junction temperature range: –40°C to +125°C

2 Applications

- eMetering
- Lighting
- Solar
- Pilot wire

3 Description

The AFE031 is a low-cost, integrated, powerline communications (PLC) analog front-end (AFE) device that is capable of capacitive- or transformer-coupled connections to the powerline while under the control of a DSP or microcontroller. It is ideal for driving low-impedance lines that require up to 1.5 A into reactive loads. The integrated receiver is able to detect signals down to 20 μV_{RMS} and is capable of a wide range of gain options to adapt to varying input signal conditions. This monolithic integrated circuit provides high reliability in demanding powerline communications applications.

The AFE031 transmit power amplifier operates from a single supply in the range of 7 V to 24 V. At maximum output current, a wide output swing provides a 12-V_{PP} (I_{OUT} = 1.5 A) capability with a nominal 15-V supply. The analog and digital signal processing circuitry operates from a single 3.3-V power supply.

Device Information(1)

PART NUMBER	PACKAGE	BODY SIZE (NOM)
AFE031	VQFN (48)	7.00 mm × 7.00 mm

(1) For all available packages, see the orderable addendum at the end of the data sheet.

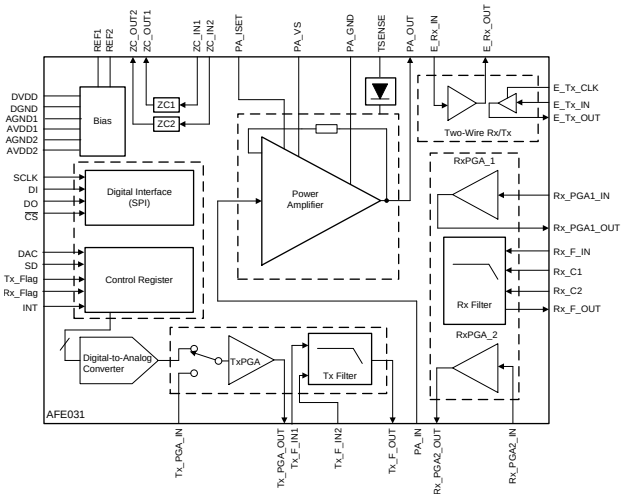

An IMPORTANT NOTICE at the end of this data sheet addresses availability, warranty, changes, use in safety-critical applications, intellectual property matters and other important disclaimers. PRODUCTION DATA.

Table of Contents

1 **Features** ... 1
2 **Applications** ... 1
3 **Description** ... 1
4 **Revision History** ... 2
5 **Description, continued** ... 4
6 **Device Comparison Table** ... 5
7 **Pin Configuration and Functions** ... 5
8 **Specifications** ... 7
8.1 Absolute Maximum Ratings ... 7
8.2 ESD Ratings ... 7
8.3 Thermal Information ... 8
8.4 Electrical Characteristics: Transmitter (Tx) ... 8
8.5 Electrical Characteristics: Power Amplifier (PA) ... 10
8.6 Electrical Characteristics: Receiver (Rx) ... 11
8.7 Electrical Characteristics: Digital ... 13
8.8 Electrical Characteristics: Two-Wire Interface ... 14
8.9 Electrical Characteristics: Internal Bias Generator ... 14
8.10 Electrical Characteristics: Power Supply ... 15
8.11 Timing Requirements ... 15
8.12 Timing Diagrams ... 16
8.13 Typical Characteristics ... 18
9 **Detailed Description** ... 22
9.1 Functional Block Diagram ... 22
9.2 Feature Description ... 23
9.3 Power Supplies ... 37
9.4 Pin Descriptions ... 38
9.5 Calibration Modes ... 40
9.6 Serial Interface ... 41
10 **Application and Implementation** ... 45
10.1 Application Information ... 45
10.2 Typical Application ... 46
11 **Device and Documentation Support** ... 52
11.1 Device Support ... 52
11.2 Documentation Support ... 53
11.3 Receiving Notification of Documentation Updates ... 53
11.4 Community Resources ... 53
11.5 Trademarks ... 53
11.6 Electrostatic Discharge Caution ... 53
11.7 Glossary ... 53
12 **Mechanical, Packaging, and Orderable Information** ... 53

4 Revision History

NOTE: Page numbers for previous revisions may differ from page numbers in the current version.

Changes from Revision D (May 2012) to Revision E — **Page**

- Deleted *Package/Ordering Information* table; see *Package Option Addendum* at the end of the data sheet ... 1
- Deleted *ESD specifications* from Absolute Maximum Ratings table. Moved to separate ESD Ratings table. ... 7
- Deleted references to Tx PGA calibration in *Calibration Modes* ... 40
- Deleted reference to TX_PGA_CAL in Table 14 ... 43

Changes from Revision C (March 2012) to Revision D — **Page**

- Updated Figure 31 ... 28
- Updated Figure 33 ... 30

Changes from Revision B (September 2011) to Revision C — **Page**

- Changed transmit power amplifier operating range description in *Description* section ... 1
- Added cross-reference to footnote 2 to *Output short-circuit (PA)* parameter in *Absolute Maximum Ratings* table ... 7
- Changed Frequency Response, *Passband frequency* (B/C/D Modes) parameter minimum and typical specifications in Electrical Characteristics: Receiver (Rx) ... 11
- Deleted Digital Outputs (INT, Tx_Flag, Rx_Flag), *INT pin high*, *INT pin low*, *Tx_Flag high*, *Tx_Flag low*, *Rx_Flag high*, and *Rx_Flag low* parameter units from Electrical Characteristics: Digital ... 13
- Changed Digital Outputs (INT, Tx_Flag, Rx_Flag), *Tx_Flag high*, *Tx_Flag low*, *Rx_Flag high*, and *Rx_Flag low* parameter specification descriptions in Electrical Characteristics: Digital ... 13
- Changed Operating Supply Range, *Power amplifier supply voltage* parameter maximum specification in Electrical Characteristics: Power Supply ... 15
- Changed title of Figure 20 ... 20
- Changed description of PA operating range in *PA Block* section ... 23

Copyright © 2010–2019, Texas Instruments Incorporated

- Updated Equation 2 24
- Changed proper design margin note in *PA Block* section 24
- Updated Figure 34 31
- Changed description of *REF1 and REF2 Blocks* section 32
- Changed second paragraph of *Power Supplies* section 37
- Changed title of Table 11 41

5 Description, continued

The AFE031 is internally protected against overtemperature and short-circuit conditions. It also provides an adjustable current limit. An interrupt output is provided that indicates both current limit and thermal limit. There is also a shutdown pin that can be used to quickly put the device into its lowest power state. Through the four-wire serial peripheral interface, or SPI™, each functional block can be enabled or disabled to optimize power dissipation.

The AFE031 is housed in a thermally-enhanced, surface-mount PowerPAD package (QFN-48). Operation is specified over the extended industrial junction temperature range of –40°C to +125°C.

Copyright © 2010–2019, Texas Instruments Incorporated

6 Device Comparison Table

DEVICE	TOTAL SUPPLY VOLTAGE (MAXIMUM) (+5 V = 5, ±5 V = 10)	OUTPUT CURRENT (TYPICAL) (mA)	GBW (TYPICAL) (MHz)	SLEW RATE (TYPICAL) (V/µs)	I_Q PER CHANNEL (TYPICAL) (mA)
AFE030	26	1000	0.67	19	40
AFE031	26	1500	0.67	19	49
AFE032	24	1900	3.8	75	48

7 Pin Configuration and Functions

RGZ PACKAGE
QFN-48
(TOP VIEW)

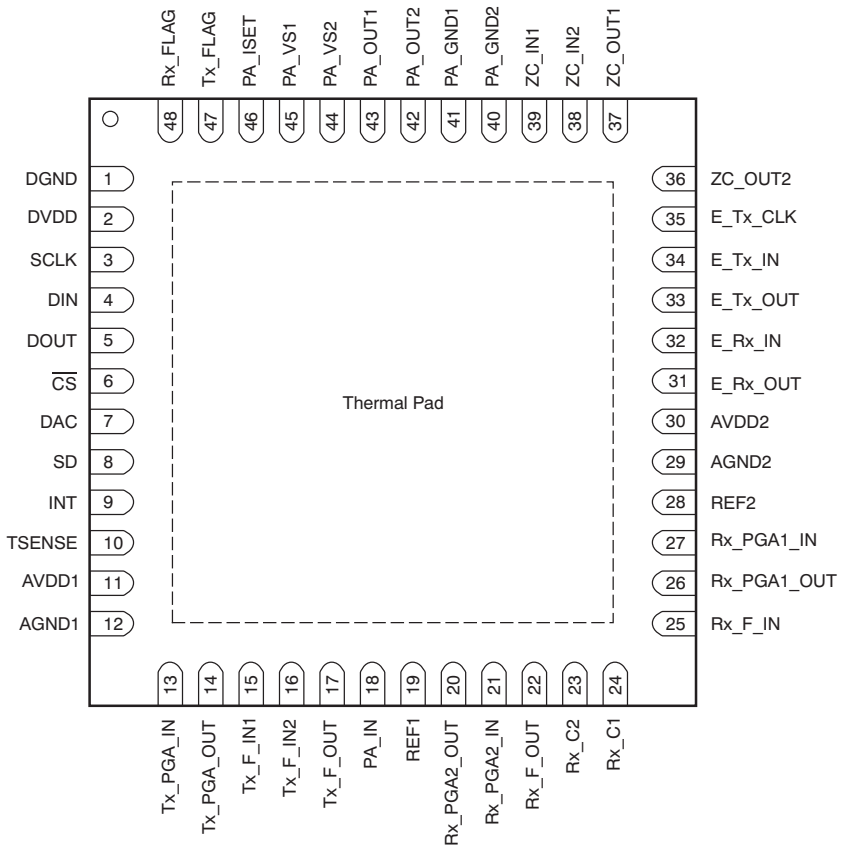

NOTE: Exposed thermal pad is connected to ground.

Pin Functions

PIN		I/O	DESCRIPTION
NAME	NO.		
AGND1	12	—	Analog ground
AGND2	29	—	Analog ground
AVDD1	11	—	Analog supply
AVDD2	30	—	Analog supply
$\overline{CS}$	6	—	SPI digital chip select
DAC	7	—	DAC mode select
DIN	4	I	SPI digital input
DGND	1	—	Digital ground
DOUT	5	O	SPI digital output
DVDD	2	—	Digital supply
E_Rx_IN	32	I	Two-wire receiver input
E_Rx_OUT	31	O	Two-wire receiver output
E_Tx_CLK	35	I	Two-wire transmitter clock input
E_Tx_IN	34	I	Two-wire transmitter input
E_Tx_OUT	33	O	Two-wire transmitter output
INT	9	—	Interrupt on overcurrent or thermal limit
PA_GND1	41	—	Power Amplifier ground
PA_GND2	40	—	Power Amplifier ground
PA_IN	18	I	Power Amplifier input
PA_ISET	46	—	Power Amplifier current limit set
PA_OUT1	43	O	Power Amplifier output
PA_OUT2	42	O	Power Amplifier output
PA_VS1	45	—	Power Amplifier supply
PA_VS2	44	—	Power Amplifier supply
REF1	19	—	Power Amplifier noise reducing capacitor
REF2	28	—	Receiver noise reducing capacitor
Rx_C1	24	—	Receiver external frequency select
Rx_C2	23	—	Receiver external frequency select
Rx_F_IN	25	I	Receiver filter input
Rx_F_OUT	22	O	Receiver filter output
Rx_FLAG	48	—	Receiver ready flag
Rx PGA1_IN	27	I	Receiver PGA(1) input
Rx PGA1_OUT	26	O	Receiver PGA(1) output
Rx PGA2_IN	21	I	Receiver PGA(2) input
Rx PGA2_OUT	20	O	Receiver PGA(2) output
SCLK	3	—	SPI serial clock
SD	8	—	System shutdown
TSENSE	10	—	Temp sensing diode (anode)
Tx_F_IN1	15	I	Transmit filter input 1
Tx_F_IN2	16	I	Transmit filter input 2
Tx_F_OUT	17	O	Transmit filter output
Tx_FLAG	47	—	Transmitter ready flag
Tx_PGA_IN	13	I	Transmit PGA input
Tx_PGA_OUT	14	O	Transmit PGA output
ZC_IN1	39	I	Zero crossing detector input
ZC_IN2	38	I	Zero crossing detector input
ZC_OUT1	37	O	Zero crossing detector output
ZC_OUT2	36	O	Zero crossing detector output

Copyright © 2010–2019, Texas Instruments Incorporated

8 Specifications

8.1 Absolute Maximum Ratings

over operating free-air temperature range (unless otherwise noted)[1]

			MIN	MAX	UNIT
Voltage	Supply voltage, PA_V_S			26	V
	Signal input terminals	Pins 18,19[2]	PA_GND – 0.4	PA_V_S + 0.4	
		Pins 13, 15, 16, 21, 23-25, 28, 32, 34, 35, 38, 39, 46[2]	AGND – 0.4	AV_{DD} + 0.4	
		Pins 3, 4, 6, 7, 8[2]	DGND – 0.4	DV_{DD} + 0.4	
	Voltage limit	Pin 27	–10	10	
	Supply voltage	AV_{DD}		5.5	
		DV_{DD}		5.5	
Current	Signal input terminals	Pins 18,19[2]	–10	10	mA
		Pins 13, 15, 16, 21, 23-25, 28, 32, 34, 35, 38, 39, 46[2]	–10	10	
		Pins 3, 4, 6, 7, 8[2]	–10	10	
	Signal output terminals	Pins 5, 9, 14, 17, 20, 22, 26, 31, 33, 36, 37, 47, 48[2]	Continuous		
	Output short circuit (PA)	Pins 42, 43	Continuous		
	Current limit	Pin 10[2][3][4]	–10	10	
Temperature	Operating, T_A[4]		–40	150	°C
	Junction, T_J			150	
	Storage, T_{stg}		–55	125	

(1) Stresses above these ratings may cause permanent damage. Exposure to absolute maximum conditions for extended periods may degrade device reliability. These are stress ratings only, and functional operation of the device at these or any other conditions beyond those specified is not implied.
(2) Input terminals are diode-clamped to the power-supply rails. Input signals that can swing more than 0.4 V beyond the supply rails should be current limited to 10 mA or less. Output terminals are diode-clamped to the power-supply rails. Output signals that can swing more than 0.4 V beyond the supply rails should be current limited to 10 mA or less.
(3) Short-circuit to ground.
(4) The AFE031 automatically goes into shutdown at junction temperatures that exceed 150°C.

8.2 ESD Ratings

		VALUE	UNIT
$V_{(ESD)}$ Electrostatic discharge	Human-body model (HBM), per ANSI/ESDA/JEDEC JS-001[1]	3000	V
	Charged-device model (CDM), per JEDEC specification JESD22-C101[2]	500	

(1) JEDEC document JEP155 states that 500-V HBM allows safe manufacturing with a standard ESD control process.
(2) JEDEC document JEP157 states that 250-V CDM allows safe manufacturing with a standard ESD control process.

8.3 Thermal Information

THERMAL METRIC[1]		AFE031 RGZ (VQFN) 48 PINS	UNIT
$R_{\theta JA}$	Junction-to-ambient thermal resistance	27.8	°C/W
$R_{\theta JC(top)}$	Junction-to-case (top) thermal resistance	12.1	°C/W
$R_{\theta JB}$	Junction-to-board thermal resistance	7.5	°C/W
ψ_{JT}	Junction-to-top characterization parameter	0.4	°C/W
ψ_{JB}	Junction-to-board characterization parameter	7.4	°C/W
$R_{\theta JC(bot)}$	Junction-to-case (bottom) thermal resistance	1.7	°C/W

(1) For more information about traditional and new thermal metrics, see the *Semiconductor and IC Package Thermal Metrics* application report.

8.4 Electrical Characteristics: Transmitter (Tx)

At T_J = 25°C, PA_V_S = 16 V, V_{AVDD} = V_{DVDD} = 3.3 V, and 10 kΩ connected to PA_ISET (pin 46), unless otherwise noted.

PARAMETER		CONDITIONS	MIN	TYP	MAX	UNIT
Tx_DAC						
	Output range		GND + 0.1		AV_{DD} – 0.1	V
	Resolution	1,024 steps, 10-bit DAC		3.2		mV
THD	Total harmonic distortion at 62.5 kHz[1]					
	Second harmonic distortion			–73		dB
	Third harmonic distortion			–56		dB
	Fourth harmonic distortion			–94		dB
	Data rate			1.5		MSPS
Tx_PGA						
Input						
	Input voltage range		GND – 0.1		AV_{DD} + 0.1	V
R_I	Input resistance	G = 1 V/V		58		kΩ
		G = 0.707 V/V		68		kΩ
		G = 0.5 V/V		77		kΩ
		G = 0.25 V/V		92		kΩ
Frequency Response						
BW	Bandwidth	DAC mode enabled				
		G = 1 V/V		8		MHz
		G = 0.707 V/V		9		MHz
		G = 0.5 V/V		10		MHz
		G = 0.25 V/V		12		MHz
Output						
V_O	Voltage output swing from AGND or AV_{DD}	R_{LOAD} = 10 kΩ, connected to AV_{DD}/2		10	100	mV
I_O	Maximum continuous current, dc	Sourcing		25		mA
		Sinking		25		mA
R_O	Output resistance	f = 100 kHz		1		Ω

(1) Total harmonic distortion measured at output of Tx_PGA configured in a gain of 1 V/V with an amplitude of 3 V_{PP}, at a 1-MHz sample rate.

Copyright © 2010–2019, Texas Instruments Incorporated

Electrical Characteristics: Transmitter (Tx) (continued)

At T_J = 25°C, PA_V_S = 16 V, V_{AVDD} = V_{DVDD} = 3.3 V, and 10 kΩ connected to PA_ISET (pin 46), unless otherwise noted.

PARAMETER		CONDITIONS	MIN	TYP	MAX	UNIT
Gain						
	Gain error	For all gains	–1%	±0.1%	1%	
	Gain error drift	T_J = –40°C to +125°C		6		ppm/°C
Tx_FILTER						
Input						
	Input voltage range		GND – 0.1		AV_{DD} + 0.1	V
R_I	Input resistance (Tx_F_IN1 and Tx_F_IN2)			43		kΩ
Frequency Response						
	CENELEC A Mode					
	Passband frequency	–3 dB		95		kHz
	Stop band attenuation		–50	–60		dB
	Stop band frequency			910		kHz
	Filter gain			0		dB
	CENELEC B/C/D Modes					
	Passband frequency	–3 dB		145		kHz
	Stop band attenuation		–50	–60		dB
	Stop band frequency			870		kHz
	Filter gain			0		dB
Output						
V_O	Voltage output swing from AGND or AV_{DD}	R_{LOAD} = 10 kΩ, connected to AV_{DD}/2		10	100	mV
I_O	Maximum continuous current, dc	Sourcing		25		mA
		Sinking		25		mA
R_O	Output resistance	f = 100 kHz		1		Ω
Transmitter Noise						
	Integrated noise at PA output (2)					
	CENELEC Band A (40 kHz to 90 kHz)	Noise-reducing capacitor = 1 nF from pin 19 to ground		435		μV_{RMS}
	CENELEC Bands B/C/D (95 kHz to 140 kHz)	Noise-reducing capacitor = 1 nF from pin 19 to ground		460		μV_{RMS}

(2) Includes DAC, Tx_PGA, Tx_Filter, PA, and REF1 bias generator.

8.5 Electrical Characteristics: Power Amplifier (PA)

At T_J = 25°C, PA_V_S = 16 V, V_{AVDD} = V_{DVDD} = 3.3 V, and 10 kΩ connected to PA_ISET (pin 46), unless otherwise noted.

PARAMETER		CONDITIONS	MIN	TYP	MAX	UNIT
Input						
	Input voltage range		GND – 0.1		PA_V_S + 0.1	V
R_I	Input resistance			20		kΩ
Frequency Response						
BW	Bandwidth	I_{LOAD} = 0		670		kHz
SR	Slew rate	10-V step		19		V/µs
	Full-power bandwidth	V_{OUT} = 10 V_{PP}		300		kHz
	AC PSRR	f = 50 kHz		14		dB
Output						
V_O	Voltage output swing from PA_V_S	I_O = 300 mA, sourcing		0.3	1	V
		I_O = 1.5 A, sourcing		1.7	2	V
V_O	Voltage output swing from PA_Gnd	I_O = 300 mA, sinking		0.3	1	V
		I_O = 1.5 A, sinking		1.3	2	V
I_O	Maximum continuous current, dc	7.5 kΩ connected to PA_I_{SET}	1.5			A
	Maximum peak current, ac	T_J = –40°C to +125°C, f = 50 kHz		1.7		A
R_O	Output resistance	I_O = 1.5 A		0.1		Ω
	PA disabled	Output impedance, f = 100 kHz, REF1 enabled		145 ll 120		kΩ ll pF
	Output current limit range			±0.4 to ±1.5		A
	Current limit equation			I_{LIM} = 20 kΩ • [1.2 V/(R_{SET} + 5 kΩ)]		A
		Solved for R_{SET} (Current Limit)		R_{SET} = [(20 kΩ • 1.2 V/I_{LIM}) – 5 kΩ]		Ω
Gain		R_{LOAD} = 1 kΩ				
G	Nominal gain			6.5		V/V
	Gain error		–1%	0.1%	1%	
	Gain error drift	T_J = –40°C to +125°C		±1		ppm/°C
TSENSE Diode						
η	Diode ideality factor			1.033		
Thermal Shutdown						
	Junction temperature at shutdown			160		°C
	Hysteresis			15		°C
	Return to normal operation			145		°C

Copyright © 2010–2019, Texas Instruments Incorporated

8.6 Electrical Characteristics: Receiver (Rx)

At T_J = 25°C, PA_V_S = 16 V, V_{AVDD} = V_{DVDD} = 3.3 V, and 10 kΩ connected to PA_ISET (pin 46), unless otherwise noted.

PARAMETER		CONDITIONS	MIN	TYP	MAX	UNIT
Rx PGA1						
Input						
	Input voltage range			10		V_{PP}
R_I	Input resistance	G = 2 V/V		10		kΩ
		G = 1 V/V		15		kΩ
		G = 0.5 V/V		20		kΩ
		G = 0.25 V/V		24		kΩ
Frequency Response						
BW	Bandwidth	G = 2 V/V		6		MHz
		G = 1 V/V		10		MHz
		G = 0.5 V/V		13		MHz
		G = 0.25 V/V		15		MHz
Output						
V_O	Voltage output swing from AGND or AV_{DD}	R_{LOAD} = 6 kΩ, connected to AV_{DD}/2		10	100	mV
I_O	Maximum continuous current, dc	Sourcing		25		mA
		Sinking		25		mA
R_O	Output resistance	G = 1, f = 100 kHz		1		Ω
Gain						
	Gain error	G = 0.25 V/V	–1%	±0.1%	1%	
		G = 0.5 V/V	–1%	±0.1%	1%	
		G = 1 V/V	–1%	±0.1%	1%	
		G = 2 V/V	–2%	±0.2%	2%	
	Gain error drift	T_J = –40°C to +125°C		1		ppm/°C
Rx Filter						
Input						
	Input voltage range		GND – 0.1		AV_{DD} + 0.1	V
R_{IN}	Input resistance			6		kΩ
Frequency Response						
	CENELEC A Mode	Rx_C1 = 680 pF, Rx_C2 = 680 pF				
	Passband frequency	–3 dB		90		kHz
	Stop band attentuation		–25	–33		dB
	Stop band frequency			270		kHz
	Filter gain			0		dB
	CENELEC B/C/D Modes	Rx_C1 = 270 pF, Rx_C2 = 560 pF				
	Passband frequency	–3 dB		145		kHz
	Stop band attenuation		–23	–27		dB
	Stop band frequency			350		kHz
	Filter gain			0		dB
Output						
V_O	Voltage output swing from AGND or AV_{DD}	R_{LOAD} = 10 kΩ, connected to AV_{DD}/2		10	100	mV
I_O	Maximum continuous current, dc	Sourcing		25		mA
		Sinking		25		mA
R_O	Output resistance	f = 100 kHz		5		Ω

Copyright © 2010–2019, Texas Instruments Incorporated

Electrical Characteristics: Receiver (Rx) (continued)

At T_J = 25°C, PA_V_S = 16 V, V_{AVDD} = V_{DVDD} = 3.3 V, and 10 kΩ connected to PA_ISET (pin 46), unless otherwise noted.

PARAMETER		CONDITIONS	MIN	TYP	MAX	UNIT
Rx PGA2						
Input						
	Input voltage range		GND – 0.1		AV_{DD} + 0.1	V
R_I	Input impedance	G = 64 V/V		1.7		kΩ
		G = 16 V/V		6.3		kΩ
		G = 4 V/V		21		kΩ
		G = 1 V/V		53		kΩ
Frequency Response						
BW	Bandwidth	G = 64 V/V		300		kHz
		G = 16 V/V		800		kHz
		G = 4 V/V		1.4		MHz
		G = 1 V/V		4		MHz
Output						
V_O	Voltage output swing from AGND or AV_{DD}	R_{LOAD} = 10 kΩ, connected to AV_{DD}/2		10	100	mV
I_O	Maximum continuous current, dc	Sourcing		25		mA
		Sinking		25		mA
R_O	Output impedance	G = 1, f = 100 kHz		1		Ω
Gain						
	Gain error	G = 1 V/V	–2%	±1%	2%	
		G = 4 V/V	–2%	±1%	2%	
		G = 16 V/V	–2%	±1%	2%	
		G = 64 V/V	–4%	±1%	4%	
	Gain error drift	T_J = –40°C to +125°C		6		ppm/°C
Rx Sensitivity						
	Integrated noise, RTI (1)					
	CENELEC Band A (40 kHz to 90 kHz)	Noise-reducing capacitor = 1 μF from pin 28 to ground		14		$μV_{RMS}$
	CENELEC Bands B/C/D (95 kHz to 140 kHz)	Noise-reducing capacitor = 1 μF from pin 28 to ground		11		$μV_{RMS}$

(1) Includes Rx PGA1, Rx_Filter, Rx PGA2, and REF2 bias generator.

Copyright © 2010–2019, Texas Instruments Incorporated

8.7 Electrical Characteristics: Digital

At T_J = 25°C, PA_V_S = 16 V, V_{AVDD} = V_{DVDD} = 3.3 V, and 10 kΩ connected to PA_ISET (pin 46), unless otherwise noted.

PARAMETER		CONDITIONS	MIN	TYP	MAX	UNIT
Digital Inputs (SCLK, DIN, $\overline{CS}$, DAC, SD)						
	Leakage input current	$0 \le V_{IN} \le DV_{DD}$	–1	0.01	1	µA
	Input logic levels					
V_{IH}	High-level input voltage		0.7 • DV_{DD}			V
V_{IL}	Low-level input voltage				0.3 • DV_{DD}	V
	SD pin high	SD > 0.7 • DV_{DD}	AFE031 in shutdown			
	SD pin low	SD < 0.3 • DV_{DD}	AFE031 in normal operation			
	DAC pin high	DAC > 0.7 • DV_{DD}	SPI access to DAC Register			
	DAC pin low	DAC < 0.3 • DV_{DD}	SPI access to Command and Data Registers			
Digital Outputs (DO, ZC_OUT)						
V_{OH}	High-level output voltage	I_{OH} = 3 mA	DV_{DD} – 0.4		DV_{DD}	V
V_{OL}	Low-level output voltage	I_{OL} = –3 mA	GND		GND + 0.4	V
Digital Outputs (INT, Tx_Flag, Rx_Flag)						
I_{OH}	High-level output current	V_{OH} = 3.3 V			1	µA
V_{OL}	Low-level output voltage	I_{OL} = 4 mA			0.4	V
I_{OL}	Low-level output current	V_{OL} = 400 mV	4			mA
	INT pin high (open drain)	INT sink current < 1 µA	Normal operation			
	INT pin low (open drain)(1)	INT < 0.4 V	Indicates an interrupt has occurred			
	Tx_Flag high (open drain)	Tx_Flag sink current < 1 µA	Indicates Tx block is ready			
	Tx_Flag low (open drain)	Tx_Flag < 0.4 V	Indicates Tx block is not ready			
	Rx_Flag high (open drain)	Rx_Flag sink current < 1 µA	Indicates Rx block is ready			
	Rx_Flag low (open drain)	Rx_Flag < 0.4 V	Indicates Rx block is not ready			
DIGITAL TIMING						
Gain Timing						
	Gain select time			0.2		µs
Shutdown Mode Timing						
	Enable time			4.0		µs
	Disable time			2.0		µs
POR Timing						
	Power-On Reset power-up time	$DV_{DD} \ge 2$ V		50		µs

(1) When an interrupt is detected (INT pin low), the contents of the I_Flag and T_Flag Registers can be read to determine the reason for the interrupt.

8.8 Electrical Characteristics: Two-Wire Interface

At T_J = 25°C, PA_V_S = 16 V, V_{AVDD} = V_{DVDD} = 3.3 V, and 10 kΩ connected to PA_ISET (pin 46), unless otherwise noted.

PARAMETER		CONDITIONS	MIN	TYP	MAX	UNIT
TWO-WIRE TRANSMITTER						
	Frequency range[(1)]			50		kHz
	Leakage input current (E_Tx_In, E_Tx_Clk)	0 ≤ V_{IN} ≤ DV_{DD}	–1	0.01	1	µA
Input logic levels (E_Tx_In, E_Tx_Clk)						
V_{IH}	High-level input voltage		0.7 • DV_{DD}			V
V_{IL}	Low-level input voltage				0.3 • DV_{DD}	V
Output logic levels (E_Tx_Out)						
V_{OH}	High-level output voltage	I_{OH} = 3 mA	AV_{DD} – 0.4		AV_{DD}	V
V_{OL}	Low-level output voltage	I_{OL} = –3 mA	GND		GND + 0.4	V
TWO-WIRE RECEIVER						
	Gain			–4.5		dB
	Frequency range			300		kHz
	Max sink current			25		mA
	Max source current			25		mA
	Input terminal offset	Referenced to V_{AVDD}/2	–100	10	100	mV
	Input impedance			78		kΩ
ZERO CROSSING DETECTOR						
	Input voltage range		AV_{DD} – 0.4		AV_{DD} + 0.4	V
	Input current range		–10		10	mA
	Input capacitance			3		pF
	Rising threshold		0.45	0.9	1.35	V
	Falling threshold		0.25	0.5	0.75	V
	Hysteresis		0.20	0.4	0.60	V
	Jitter	50 Hz, 240 V_{RMS}		10		ns

(1) The two-wire transmitter circuit is tested at Tx_CLK = 10 MHz.

8.9 Electrical Characteristics: Internal Bias Generator

At T_J = 25°C, PA_V_S = 16 V, V_{AVDD} = V_{DVDD} = 3.3 V, and 10 kΩ connected to PA_ISET (pin 46), unless otherwise noted.

PARAMETER		CONDITIONS	MIN	TYP	MAX	UNIT
REF1 (Pin 19)						
	Bias voltage			PA_V_S/2		V
R_I	Input resistance			4		kΩ
	Turn-on time	Noise-reducing capacitor = 1 nF from pin 19 to ground		20		ms
	Turn-off time	Noise-reducing capacitor = 1 nF from pin 19 to ground		20		ms
REF2 (Pin 28)						
	Bias voltage			V_{AVDD}/2		V
R_I	Input resistance			4		kΩ
	Turn-on time	Noise-reducing capacitor = 1 µF from pin 28 to ground		20		ms
	Turn-off time	Noise-reducing capacitor = 1 µF from pin 28 to ground		20		ms

Copyright © 2010–2019, Texas Instruments Incorporated

8.10 Electrical Characteristics: Power Supply

At T_J = 25°C, PA_V_S = 16 V, V_{AVDD} = V_{DVDD} = 3.3 V, and 10 kΩ connected to PA_ISET (pin 46), unless otherwise noted.

PARAMETER		CONDITIONS	MIN	TYP	MAX	UNIT
Operating Supply Range						
PA_V_S	Power amplifier supply voltage		7		24	V
DV_{DD}	Digital supply voltage		3.0		3.6	V
AV_{DD}	Analog supply voltage		3.0		3.6	V
Quiescent Current		SD pin low				
I_{QPA_VS}	Power amplifier current	I_O = 0 A, PA = On(1)		49	61	mA
		I_O = 0 A, PA = Off(2)		10		µA
I_{QDVDD}	Digital supply current	Tx configuration(3)		1.2		mA
		Rx configuration(4)		5		µA
		All blocks disabled(5)		5		µA
I_{QAVDD}	Analog supply current	Tx configuration(3)		2.8	3.7	mA
		Rx configuration(4)		3.6	5.3	mA
		All blocks disabled(5)		30		µA
Shutdown (SD)						
PA_V_S	Power amplifier supply voltage	SD pin high		75	150	µA
DV_{DD}	Digital supply voltage	SD pin high		5	10	µA
AV_{DD}	Analog supply voltage	SD pin high		15	40	µA
Temperature						
	Specified range		–40		125	°C

(1) Enable1 Register = 00100011, Enable2 Register = 00001110.
(2) Enable1 Register = 00000100, Enable2 Register = 00000110.
(3) In the Tx configuration, the following blocks are enabled: DAC, Tx, PA, REF1, and REF2. All other blocks are disabled. Enable1 Register = 00100011, Enable2 Register = 00001110.
(4) In the Rx configuration, the following blocks are enabled: Rx, REF1, and REF2. All other blocks are disabled. Enable1 Register = 00000100, Enable2 Register = 00000110.
(5) Enable1 Register = 00000000, Enable2 Register = 00000000.

8.11 Timing Requirements

Table 1. SPI Timing Requirements

PARAMETER		CONDITION	MIN	TYP	MAX	UNIT
Input capacitance				1		pF
Input rise/fall time	t_{RFI}	$\overline{CS}$, DIN, SCLK			2	ns
Output rise/fall time	t_{RFO}	DOUT			10	ns
$\overline{CS}$ high time	t_{CSH}	$\overline{CS}$	20			ns
SCLK edge to $\overline{CS}$ fall setup time	t_{CS0}		10			ns
$\overline{CS}$ fall to first SCLK edge setup time	t_{CSSC}		10			ns
SCLK frequency	f_{SCLK}				20	MHz
SCLK high time	t_{HI}		20			ns
SCLK low time	t_{LO}		20			ns
SCLK last edge to $\overline{CS}$ rise setup time	t_{SCCS}		10			ns
$\overline{CS}$ rise to SCLK edge setup time	t_{CS1}		10			ns
DIN setup time	t_{SU}		10			ns
DIN hold time	t_{HD}		5			ns
SCLK to DOUT valid propagation delay	t_{DO}				20	ns
$\overline{CS}$ rise to DOUT forced to Hi-Z	t_{soz}				20	ns

Copyright © 2010–2019, Texas Instruments Incorporated

8.12 Timing Diagrams

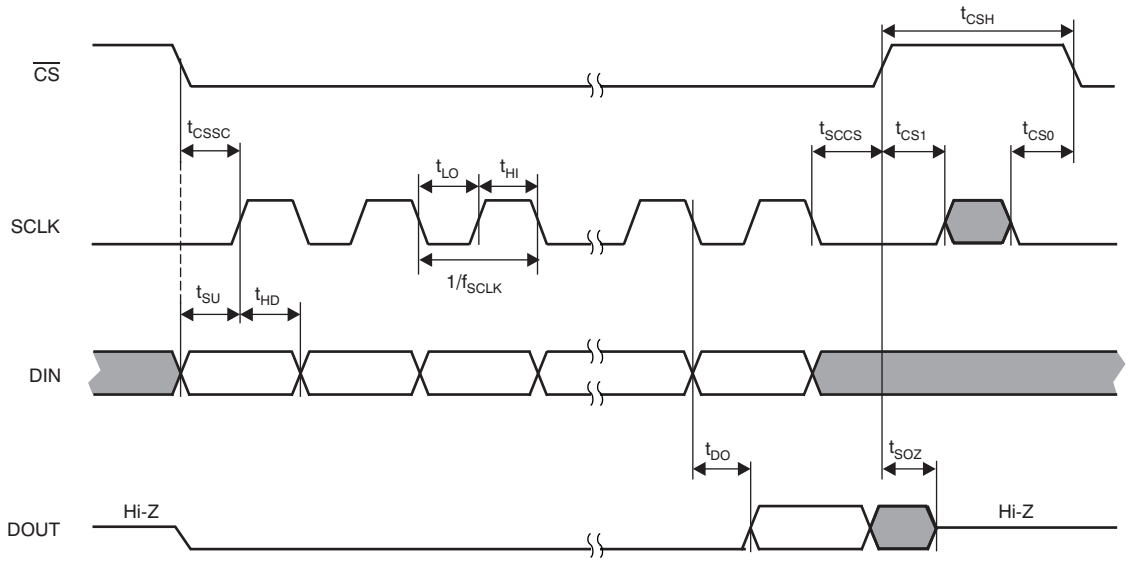

Figure 1. SPI Mode 0,0

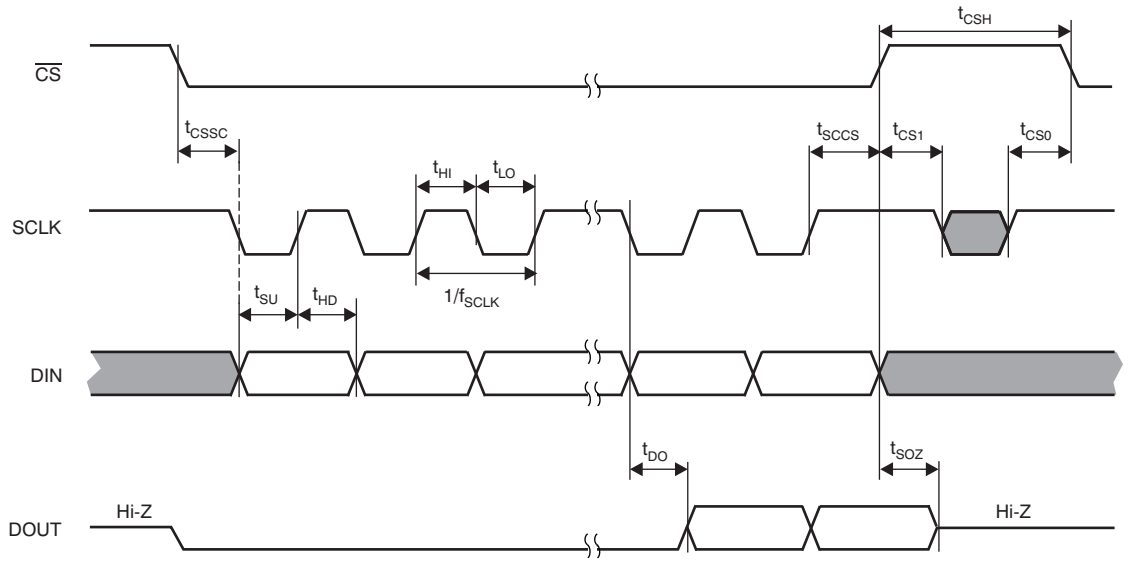

Figure 2. SPI Mode 1,1

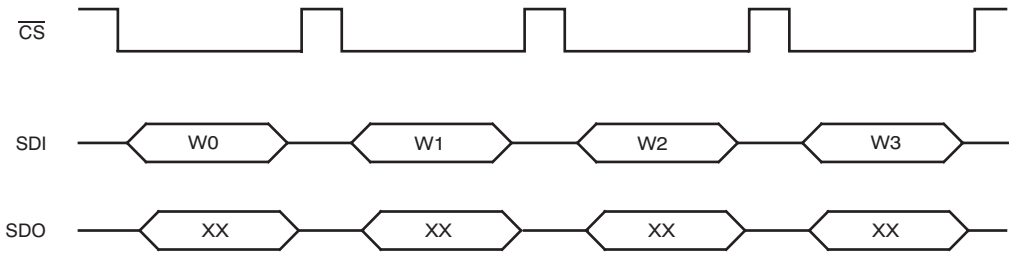

W - Command of Write Register *N*
XX - Don't care; undefined.

Figure 3. Write Operation in Stand-Alone Mode

Copyright © 2010–2019, Texas Instruments Incorporated

Timing Diagrams (continued)

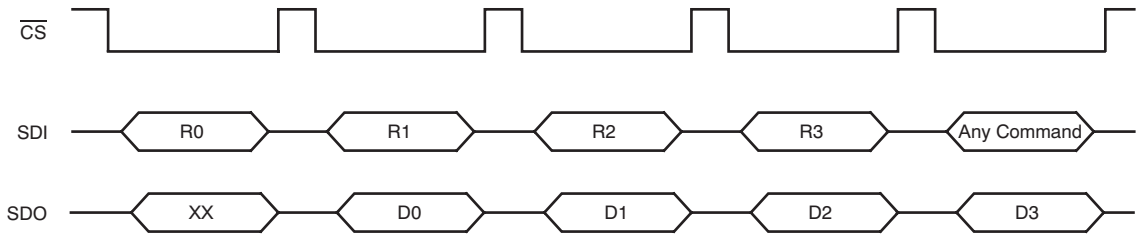

R - Command of Read Register *N* Read
D - Data from Register *N*
XX - Don't care; undefined.

Figure 4. Read Operation in Stand-Alone Mode

8.13 Typical Characteristics

At T_J = 25°C, PA_V_S = 16 V, V_{AVDD} = V_{DVDD} = 3.3 V, and 10 kΩ connected to PA_ISET (pin 46), unless otherwise noted.

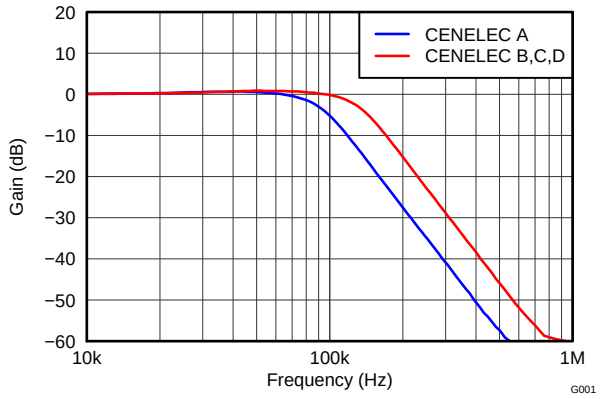

Figure 5. Tx Filter Gain vs Frequency

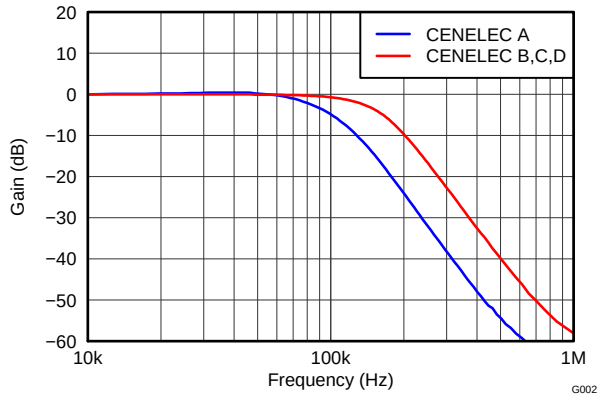

Figure 6. Rx Filter Gain vs Frequency

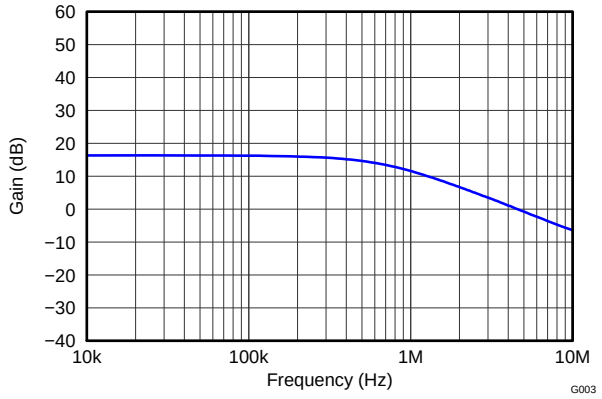

Figure 7. PA Gain vs Frequency

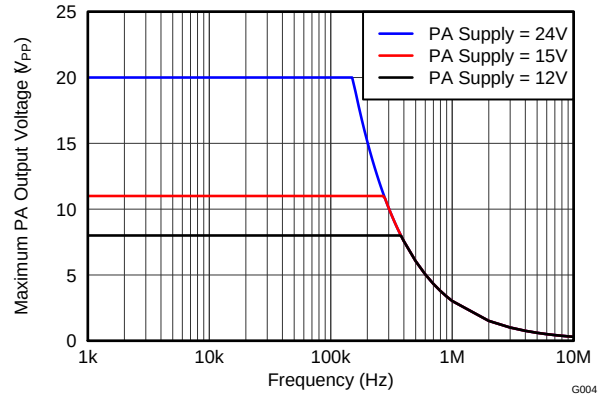

Figure 8. Maximum PA Output Voltage vs Frequency

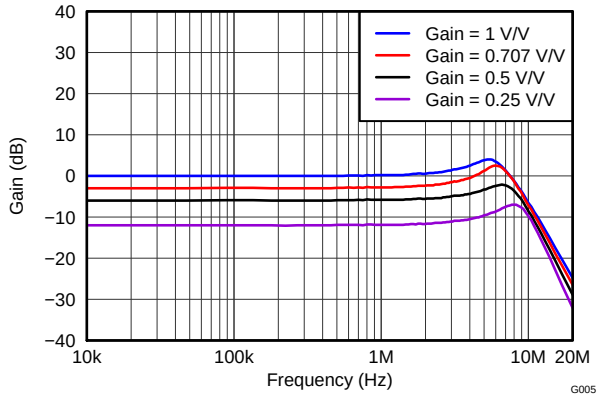

Figure 9. Tx PGA Gain vs Frequency

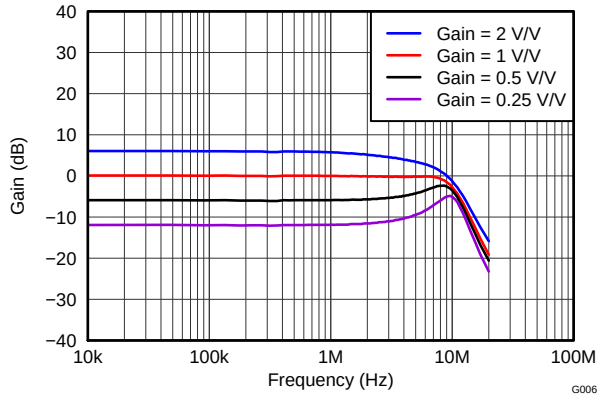

Figure 10. Rx PGA1 Gain vs Frequency

Copyright © 2010–2019, Texas Instruments Incorporated

Typical Characteristics (continued)

At T_J = 25°C, PA_V_S = 16 V, V_{AVDD} = V_{DVDD} = 3.3 V, and 10 kΩ connected to PA_ISET (pin 46), unless otherwise noted.

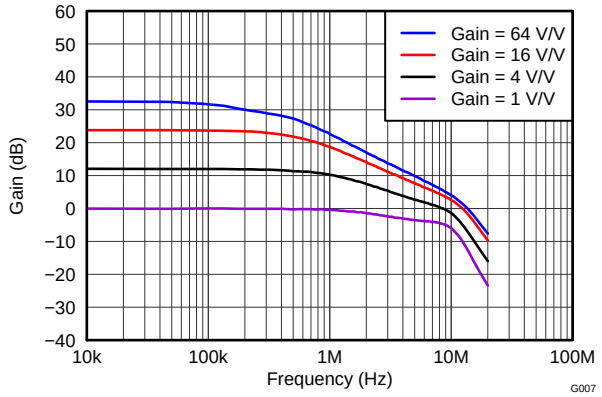

Figure 11. Rx PGA2 Gain vs Frequency

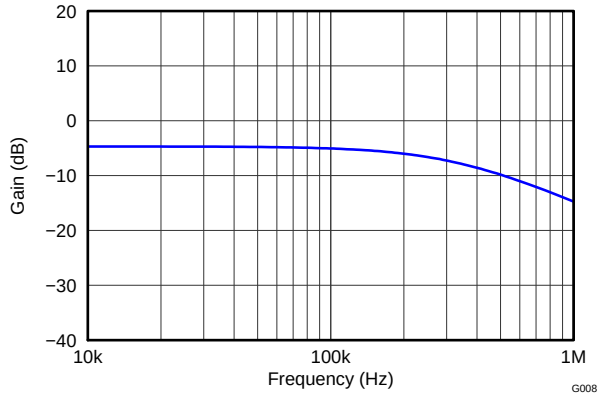

Figure 12. Two-Wire Receiver Gain vs Frequency

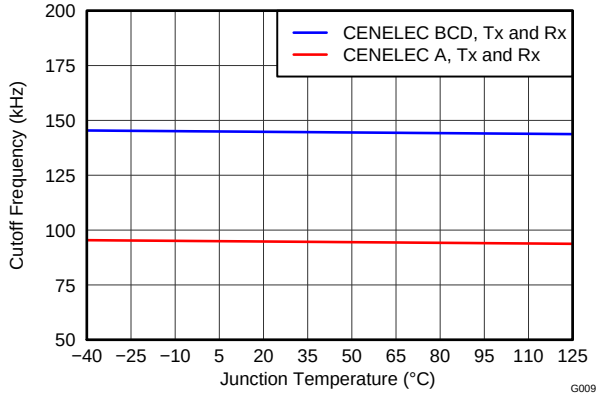

Figure 13. Filter Cutoff vs Temperature

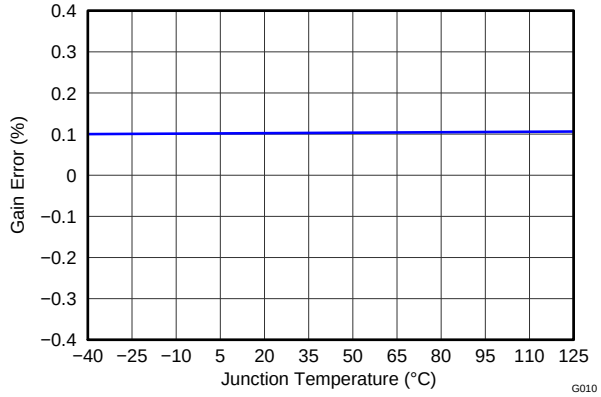

Figure 14. Tx PGA Gain Error vs Temperature

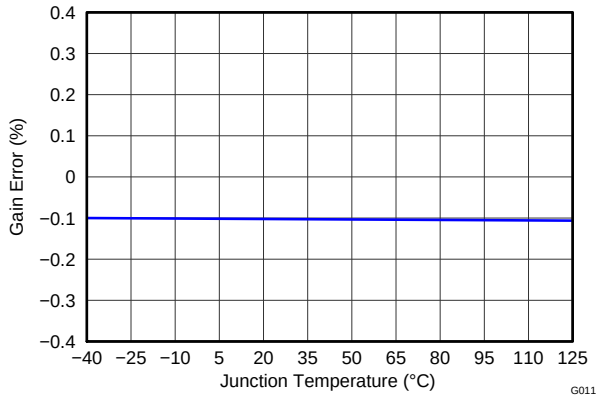

Figure 15. PA Gain Error vs Temperature

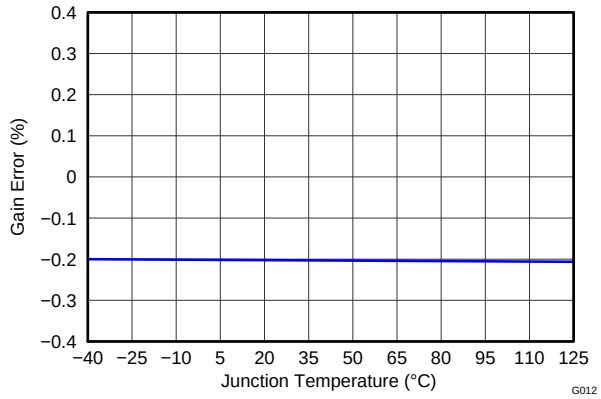

Figure 16. Rx PGA1 Gain Error vs Temperature

Typical Characteristics (continued)

At T_J = 25°C, PA_V_S = 16 V, V_{AVDD} = V_{DVDD} = 3.3 V, and 10 kΩ connected to PA_ISET (pin 46), unless otherwise noted.

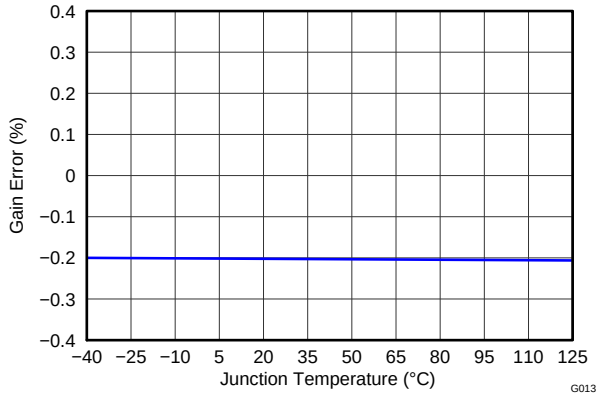

Figure 17. Rx PGA2 Gain Error vs Temperature

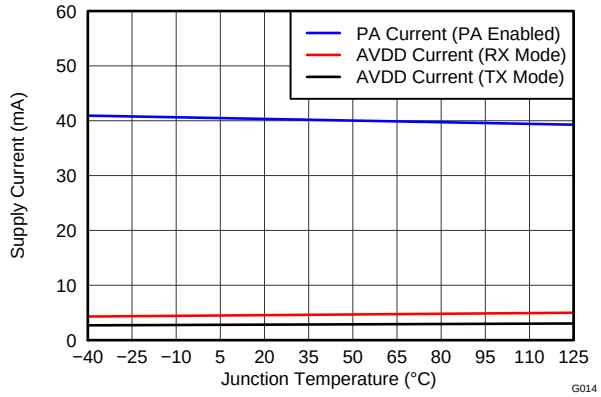

Figure 18. Quiescent Supply Current vs Temperature

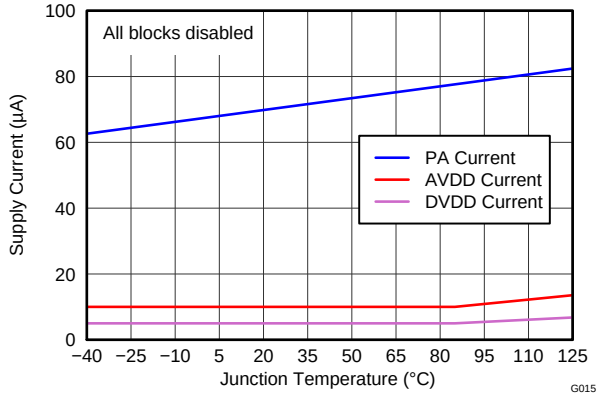

Figure 19. Supply Current (Shutdown) vs Temperature

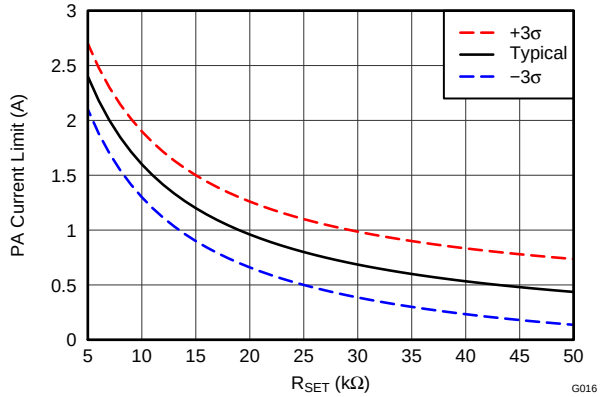

Figure 20. PA Current Limit vs R_{SET}

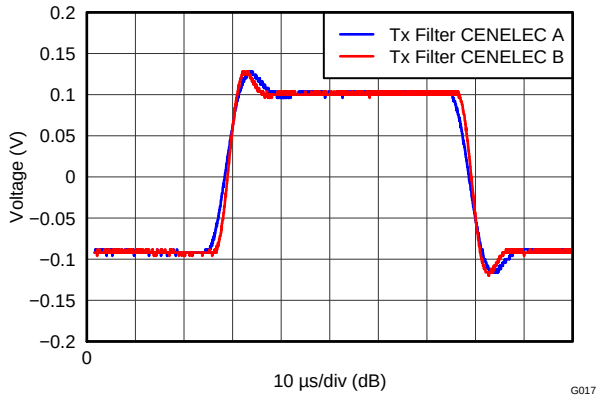

Figure 21. Tx Filter Pulse Response

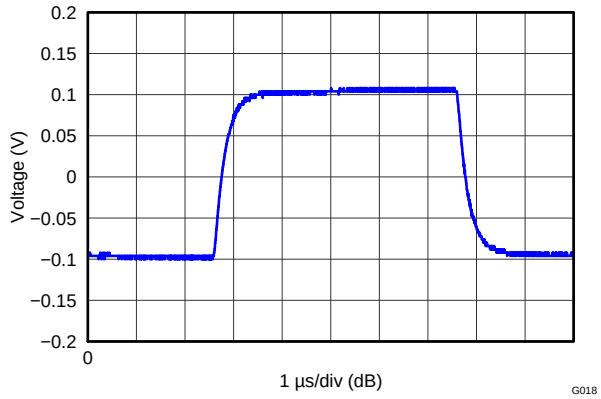

Figure 22. PA Pulse Response

Copyright © 2010–2019, Texas Instruments Incorporated

Typical Characteristics (continued)

At T_J = 25°C, PA_V_S = 16 V, V_{AVDD} = V_{DVDD} = 3.3 V, and 10 kΩ connected to PA_ISET (pin 46), unless otherwise noted.

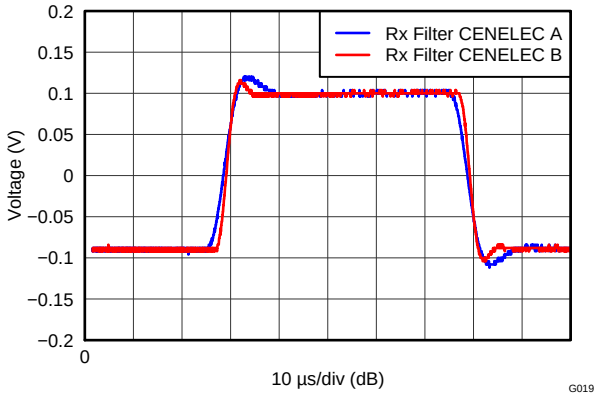

Figure 23. Rx Pulse Response

9 Detailed Description

9.1 Functional Block Diagram

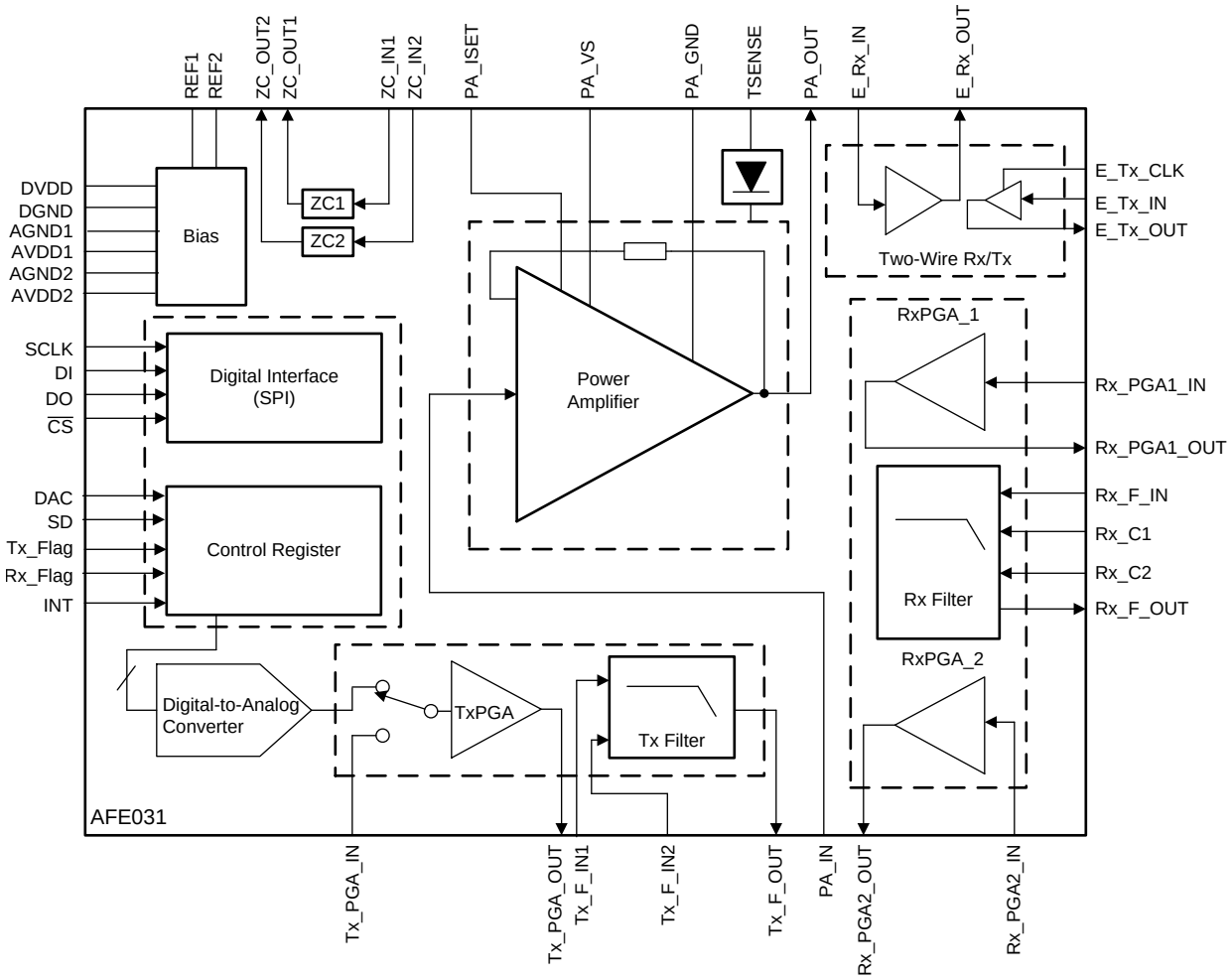

Copyright © 2010–2019, Texas Instruments Incorporated

9.2 Feature Description

9.2.1 PA Block

The Power Amplifier (PA) block consists of a high slew rate, high-voltage, and high-current operational amplifier. The PA is configured with an inverting gain of 6.5 V/V, has a low-pass filter response, and maintains excellent linearity and low distortion. The PA is specified to operate from 7 V to 24 V and can deliver up to ±1.5 A of continuous output current over the specified junction temperature range of –40°C to +125°C. Figure 24 illustrates the PA block.

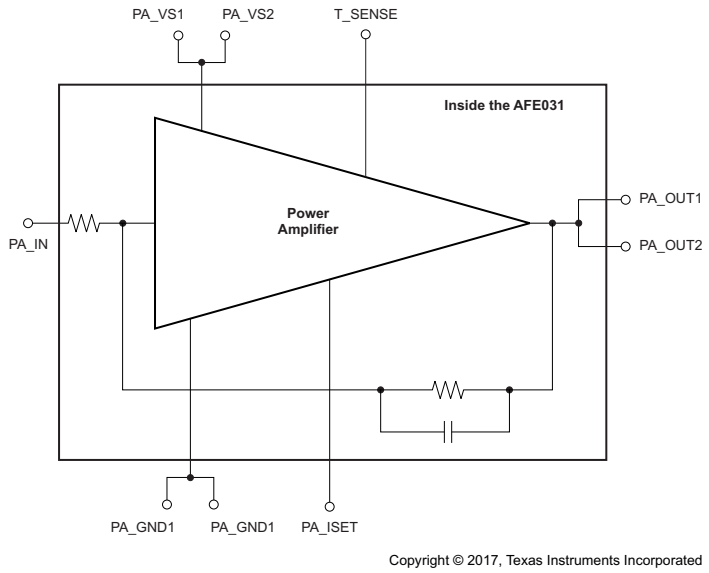

Figure 24. PA Block Equivalent Circuit

Connecting the PA in a typical PLC application requires only two additional components: an ac coupling capacitor, C_{IN}, and the current limit programming resistor, R_{SET}. Figure 25 shows the typical connections to the PA block.

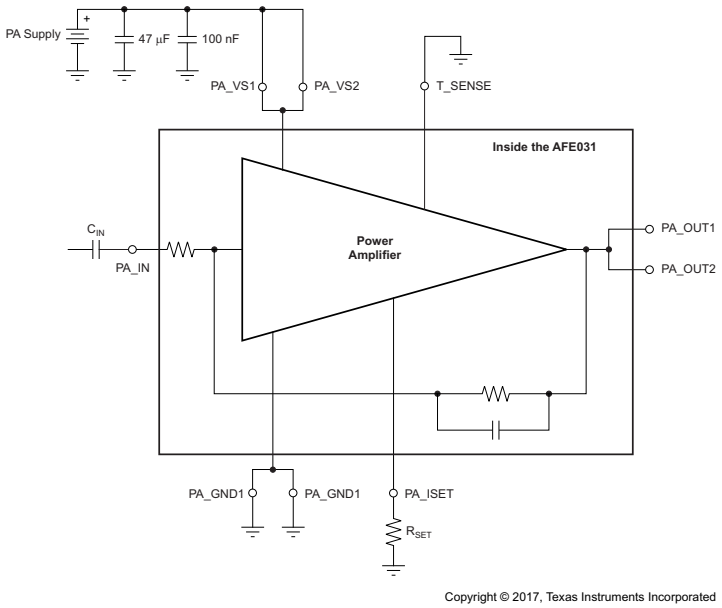

Figure 25. Typical Connections to the PA

Feature Description (continued)

The external capacitor, C_{IN}, introduces a single-pole, high-pass characteristic to the PA transfer function; combined with the inherent low-pass transfer function, this characteristic results in a passband response. The value of the high-pass cutoff frequency is determined by C_{IN} reacting with the input resistance of the PA circuit, and can be found from Equation 1:

$$C_{IN} = \frac{1}{(2 \bullet \pi \bullet 20\ k\Omega \bullet f_{HP})} \tag{1}$$

Where:

- C_{IN} = external input capacitor
- f_{HP} = desired high-pass cutoff frequency

For example, setting C_{IN} to 3.3 nF results in a high-pass cutoff frequency of 2.4 kHz. The voltage rating for C_{IN} should be determined to withstand operation up to the PA power-supply voltage.

When the transmitter is not in use, the output can be disabled and placed into a high-impedance state by writing a '0' to the PA-OUT bit in the Enable2 Register. Additional power savings can be realized by shutting down the PA when not in use. Shutting down the PA for power savings is accomplished by writing a '0' to the PA bit in the Enable1 Register. Shutting down the PA also results in the PA output entering a high-impedance state. When the PA shuts down, it consumes only 2 mW of power.

The PA_ISET pin (pin 46) provides a resistor-programmable output current limit for the PA block. Equation 2 determines the value of the external R_{SET} resistor attached to this pin.

$$R_{SET} = \left(20\ k\Omega \bullet \frac{1.2\ V}{I_{LIM}}\right) - 5\ k\Omega \tag{2}$$

Where:

- R_{SET} = the value of the external resistor connected between pin 46 and ground.
- I_{LIM} = the value of the desired current limit for the PA.

Note that to ensure proper design margin with respect to manufacturing and temperature variations, a 30% decrease of the value used in Equation 2 for I_{LIM} over the nominal value of I_{LIM} is recommended. See Figure 20, *PA Current Limit vs R_{SET}*.

9.2.2 Tx Block

The Tx block consists of the Tx PGA and Tx Filter. The Tx PGA is a low-noise, high-performance, programmable gain amplifier. In DAC mode (where pin 7 is a logical '1' and Enable1 Register bit location 5 is a logical '1'), the Tx PGA operates as the internal digital-to-analog converter (DAC) output buffer with programmable gain. In PWM mode (where pin 7 is a logical '0' and Enable1 Register bit location 5 is a logical '0'), the Tx PGA operates as a stand-alone programmable gain amplifier. The Tx PGA gain is programmed through the serial interface. The Tx PGA gain settings are 0.25 V/V, 0.5 V/V, 0.707 V/V, and 1 V/V.

The Tx Filter is a unity-gain, fourth-order low-pass filter. The Tx Filter cutoff frequency is selectable between CENELEC A or CENELEC B, C, and D modes. The Control1 Register bit location 3 setting (CA CBCD) determines the cutoff frequency. Setting Control1 Register bit location 3 to '0' selects the CENELEC A band; setting Control1 Register bit location 3 to '1' selects CENELEC B, C, and D bands.

The AFE031 supports both DAC inputs or PWM inputs for the Tx signal path. DAC mode is recommended for best performance. In DAC mode, no external components in the Tx signal path are required to meet regulatory signal emissions requirements. When in DAC mode, the AFE031 accepts serial data from the microprocessor and writes that data to the internal DAC registers. When in DAC mode (where pin 7 is a logical '1' and Enable1 Register bit location 5 is a logical '1'), the Tx PGA output must be directly coupled to the Tx_FIN1 input and the unused Tx_FIN2 input must be grounded.

Copyright © 2010–2019, Texas Instruments Incorporated

Feature Description (continued)

The proper connections for the Tx signal path for DAC mode operation are shown in Figure 26. Operating in DAC mode results in the lowest distortion signal injected onto the ac mains. No additional external filtering components are required to meet CENELEC requirements for A, B, C or D bands when operating in DAC mode.

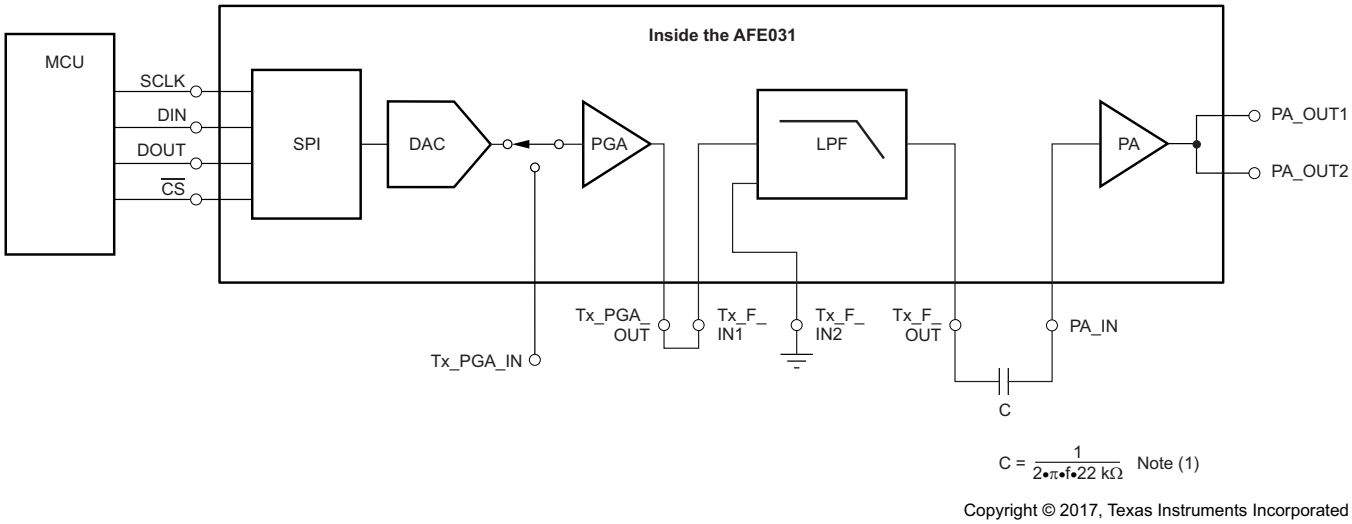

Copyright © 2017, Texas Instruments Incorporated

(1) For capacitor value *C*, *f* is the desired lower cutoff frequency and 22 kΩ is the PA input resistance.

Figure 26. Recommended Tx Signal Chain Connections Using DAC Mode

In PWM mode (where pin 7 is a logical '0' and Enable1 Register bit location 5 is a logical '0'), the microprocessor general-purpose input/output (GPIO) can be connected directly to either one of the Tx Filter inputs; the unused input should remain unconnected. A lower distortion PWM signal generated from two PWM signals shifted in phase by 90 degrees can be also be input to the Tx Filter through the use of both inputs. Figure 27 and Figure 28 show the proper connections for single PWM and dual PWM operating modes, respectively.

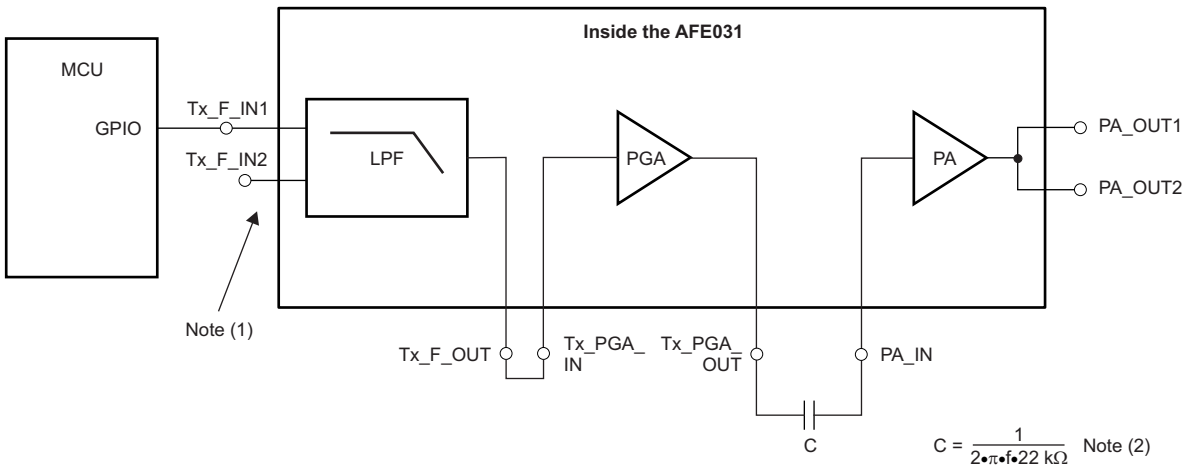

Copyright © 2017, Texas Instruments Incorporated

(1) Leave unused Tx Filter input unconnected.

(2) For capacitor value *C*, *f* is the desired lower cutoff frequency and 22 kΩ is the PA input resistance.

Figure 27. Recommended Tx Signal Chain Connections in PWM Mode Using One PWM Signal

Feature Description (continued)

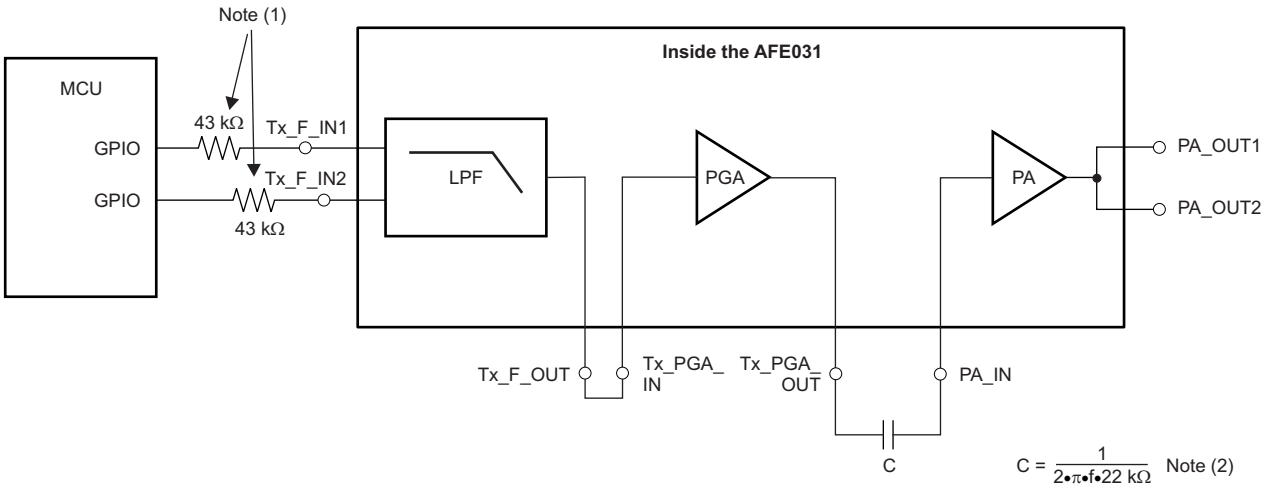

Copyright © 2017, Texas Instruments Incorporated

(1) When using both Tx Filter inputs, use 43-kΩ resistors to match the input resistance for best frequency response.

(2) For capacitor value *C*, *f* is the desired lower cutoff frequency and 22 kΩ is the PA input resistance.

Figure 28. Recommended Tx Signal Chain Connections in PWM Mode Using Two PWM Signals

In PWM mode, there is inherently more distortion from the PWM signal than from the internal DAC. To achieve the best results in PWM mode, add passive RC filters to increase the low-pass filtering. Figure 29 and Figure 30 illustrate the recommended locations of these RC filters.

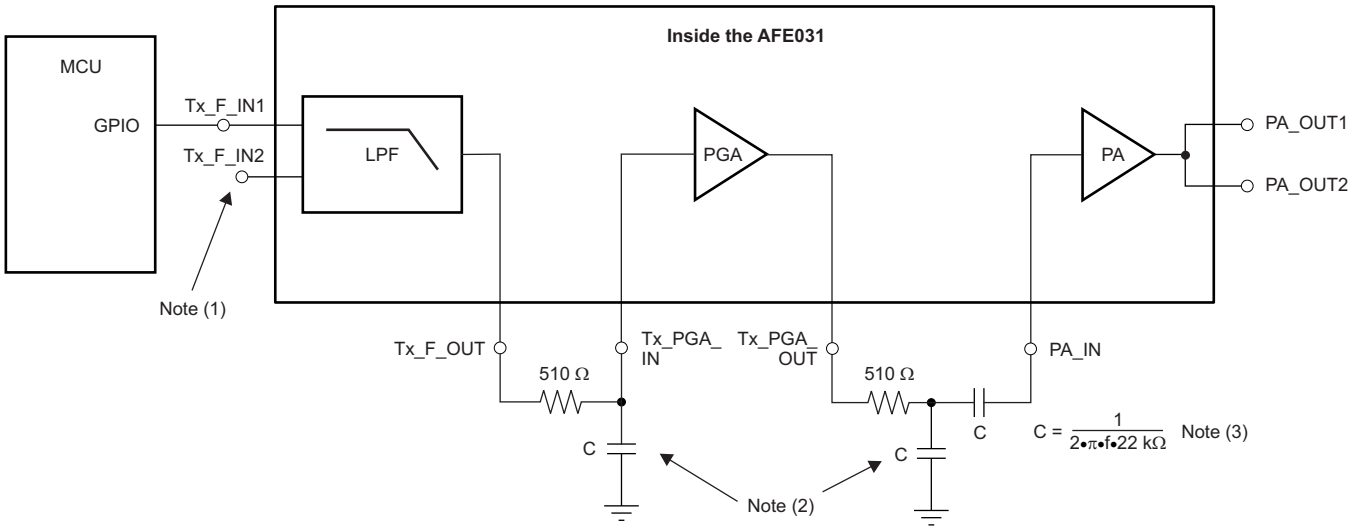

Copyright © 2017, Texas Instruments Incorporated

(1) Leave unused Tx Filter input unconnected.

(2) Refer to Table 2.

(3) For capacitor value *C*, *f* is the desired lower cutoff frequency and 22 kΩ is the PA input resistance.

Figure 29. Recommended Tx Signal Chain Connections in PWM Mode Using One PWM Signal and Additional RC Filters

Copyright © 2010–2019, Texas Instruments Incorporated

Feature Description (continued)

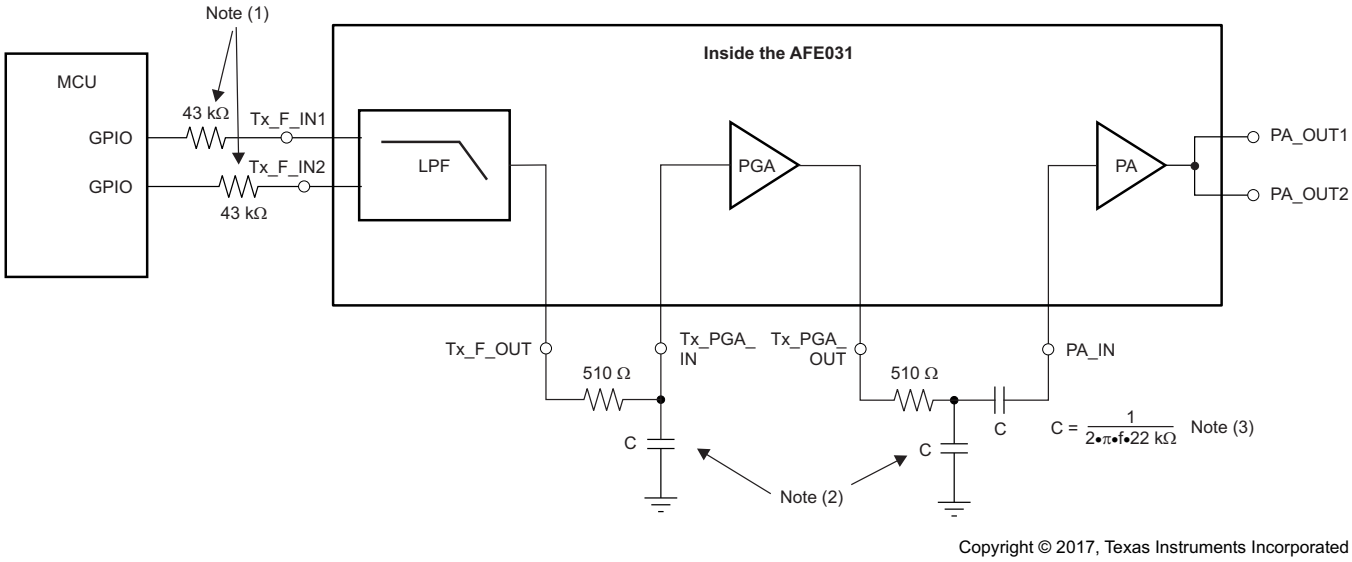

(1) When using both Tx Filter inputs, use 43-kΩ resistors to match the input resistance for best frequency response.

(2) Refer to Table 2.

(3) For capacitor value *C*, *f* is the desired lower cutoff frequency and 22 kΩ is the PA input resistance.

Figure 30. Recommended Tx Signal Chain Connections in PWM Mode Using Two PWM Signals and Additional RC Filters

For the capacitors listed in Table 2, it is recommended that these components be rated to withstand the full AV_{DD} power-supply voltage.

Table 2. Recommended External R and C Values to Increase Tx Filter Response Order in PWM Applications

FREQUENCY BAND	R (Ω)	C (nF)
SFSK: 63 kHz, 74 kHz	510	2.7
CENELEC A	510	1.5
CENELEC B, C, D	510	1

The Tx PGA and Tx Filter each have the inputs and outputs externally available in order to provide maximum system design flexibility. Care should be taken when laying out the PCB traces from the inputs or outputs to avoid excessive capacitive loading. Keeping the PCB capacitance from the inputs to ground, or from the outputs to ground, less than 100 pF is recommended.

9.2.3 Rx Block

The Rx block consists of Rx PGA1, the Rx Filter, and Rx PGA2. Both Rx PGA1 and Rx PGA2 are high-performance programmable gain amplifiers. Rx PGA1 can be configured through the SPI to operate as either an attenuator or in gain. The gain steps of the Rx PGA1 are 0.25 V/V, 0.5 V/V, 1 V/V, and 2 V/V. The gain steps of the Rx PGA2 are 1 V/V, 4 V/V, 16 V/V, and 64 V/V. Configuring the Rx PGA1 as an attenuator (at gains less than 1 V/V) is useful for applications where the presence of large interference signals are present within the signal band. Attenuating the large interference allows these signals to pass through the analog Rx signal chain without causing an overload; the interference signal can then be processed and removed within the microprocessor as necessary.

The Rx Filter is a very low noise, unity-gain, fourth-order low-pass filter. The Rx Filter cutoff frequency is selectable between CENELEC A or CENELEC B, C, and D modes. The Control1 Register bit location 3 setting (CA CBCD) determines the cutoff frequency. Setting Control1 Register bit location 3 to '0' selects the CENELEC A band; setting Control1 Register bit location 3 to '1' selects the CENELEC B, C, and D bands. Because the Rx Filter is a very low noise analog filter, two external capacitors are required to properly configure the Rx Filter. Table 3 shows the proper capacitance values for CENELEC A, B, C, and D bands. Capacitor Rx C1 is connected between pin 24 and ground, and Rx C2 is connected between pin 23 and ground. For the capacitors shown, it is recommended that these components be rated to withstand the full AV_{DD} power-supply voltage

Table 3. Recommended External Capacitors Required for Rx Filter

FREQUENCY BAND	Rx C1, PIN 24	Rx C2, PIN 23	CUTOFF FREQUENCY (kHz)
CENELEC A	680 pF	680 pF	90
CENELEC B, C, D	270 pF	560 pF	145

Figure 31 illustrates the recommended connections for the Rx signal chain.

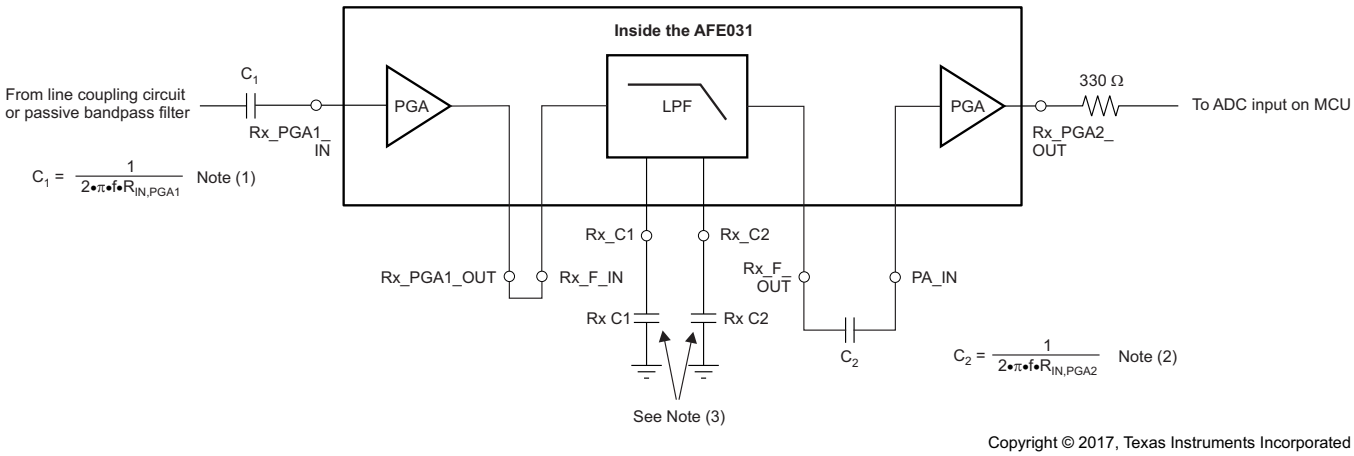

Copyright © 2017, Texas Instruments Incorporated

(1) For capacitor value C_1, f is the desired lower cutoff frequency and $R_{IN,PGA1}$ is the input resistance of Rx PGA1.

(2) For capacitor value C_2, f is the desired lower cutoff frequency and $R_{IN,PGA2}$ is the input resistance of Rx PGA2.

(3) Refer to Table 3.

Figure 31. Recommended Connections for Rx Signal Chain

As Figure 32 shows, a fourth-order passive passband filter is optional but recommended for applications where high performance is required. The external passive passband filter removes any unwanted, out-of-band signals from the signal path, and prevents them from reaching the active internal filters within the AFE031.

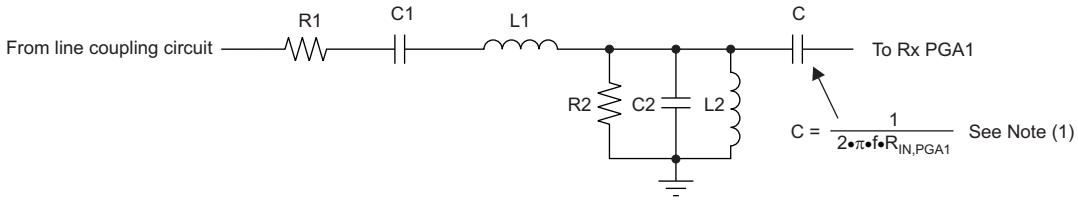

Copyright © 2017, Texas Instruments Incorporated

(1) For capacitor value C, f is the desired lower cutoff frequency and $R_{IN,PGA1}$ is the input resistance of Rx PGA1. Refer to Table 3.

Figure 32. Passive Bandpass Rx Filter

Copyright © 2010–2019, Texas Instruments Incorporated

The following steps can be used to quickly design the passive passband filter. (Note that these steps produce an approximate result.)

1. Choose the filter characteristic impedance, Z_C:
   - For –6-db passband attenuation: $R_1 = R_2 = Z_C$
   - For 0-db passband attenuation: $R_1 = Z_C$, $R_2 = 10 \bullet Z_C$
2. Calculate values for C_1, C_2, L_1, and L_2 using the following equations:

$$C_1 = \frac{1}{(2 \bullet \pi \bullet f_1 \bullet Z_C)}$$

$$C_2 = \frac{1}{(2 \bullet \pi \bullet f_2 \bullet Z_C)}$$

$$L_1 = \frac{Z_C}{(2 \bullet \pi \bullet f_2)}$$

$$L_2 = \frac{Z_C}{(2 \bullet \pi \bullet f_1)}$$

Table 4 and Table 5 shows standard values for common applications.

Table 4. Recommended Component Values for Fourth-Order Passive Bandpass Filter (0-db Passband Attenuation)

FREQUENCY BAND	FREQUENCY RANGE (kHz)	CHARACTERISTIC IMPEDANCE (Ω)	R1 (Ω)	R2 (Ω)	C1 (nF)	C2 (nF)	L1 (µH)	L2 (µH)
CENELEC A	35 to 95	1k	1k	10k	4.7	1.5	1500	4700
CENELEC B, C, D	95 to 150	1k	1k	10k	1.7	1	1200	1500
SFSK	63 to 74	1k	1k	10k	2.7	2.2	2200	2200

Table 5. Recommended Component Values for Fourth-Order Passive Bandpass Filter (–6-db Passband Attenuation)

FREQUENCY BAND	FREQUENCY RANGE (kHz)	CHARACTERISTIC IMPEDANCE (Ω)	R1 (Ω)	R2 (Ω)	C1 (nF)	C2 (nF)	L1 (µH)	L2 (µH)
CENELEC A	35 to 95	1k	1k	1k	4.7	1.5	1500	4700
CENELEC B, C, D	95 to 150	1k	1k	1k	1.7	1	1200	1500
SFSK	63 to 74	1k	1k	1k	2.7	2.2	2200	2200

Copyright © 2010–2019, Texas Instruments Incorporated

The Rx PGA1, Rx Filter, and Rx PGA2 components have all inputs and outputs externally available to provide maximum system design flexibility. Care should be taken when laying out the PCB traces from the inputs or outputs to avoid excessive capacitive loading. Keeping the PCB capacitance from the inputs to ground, or outputs to ground, below 100 pF is recommended.

Figure 33 shows the complete Rx signal path, including the optional passive passband filter.

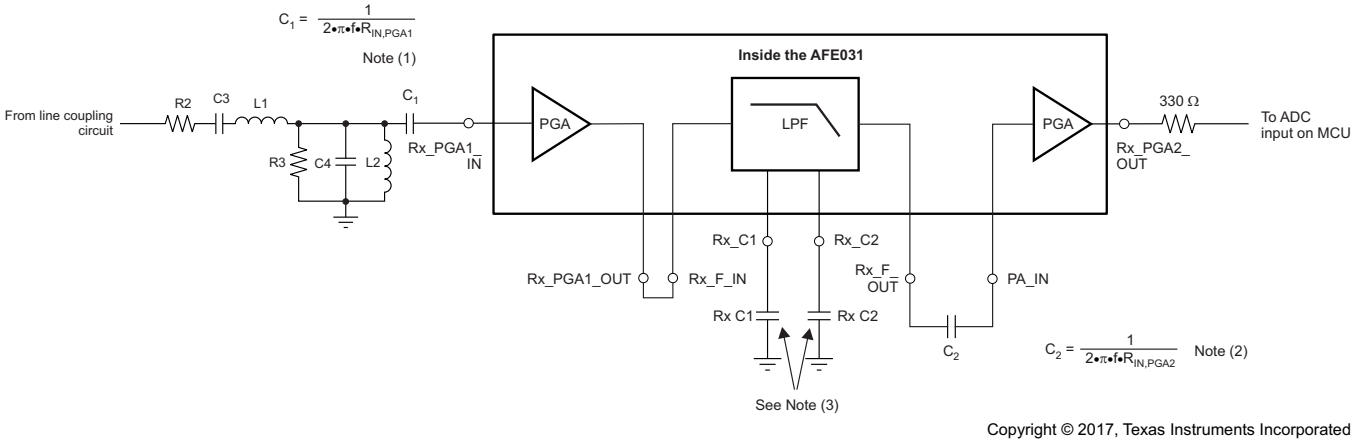

Copyright © 2017, Texas Instruments Incorporated

(1) For capacitor value *C1*,*f* is the desired lower cutoff frequency and $R_{IN,PGA1}$ is the input resistance of Rx PGA1.

(2) For capacitor value *C2*,*f* is the desired lower cutoff frequency and $R_{IN,PGA2}$ is the input resistance of Rx PGA2.

(3) Refer to Table 3.

Figure 33. Complete Rx Signal Path (with Optional Bandpass Filter)

9.2.4 DAC Block

The DAC block consists only of the 10-bit DAC. The use of the DAC is recommended for best performance. The serial interface is used to write directly to the DAC registers when the DAC pin (pin 7) is driven high. Placing the DAC pin into a high state configures the SPI for direct serial interface to the DAC. Use the following sequence to write to the DAC:

- Set $\overline{CS}$ low.
- Set the DAC pin (pin 7) high.
- Write a 10-bit word to DIN. The DAC register is left-justified and truncates more than 10 bits.
- $\overline{CS}$ high updates the DAC.

Refer to Figure 34 for an illustration of this sequence.

Copyright © 2010–2019, Texas Instruments Incorporated

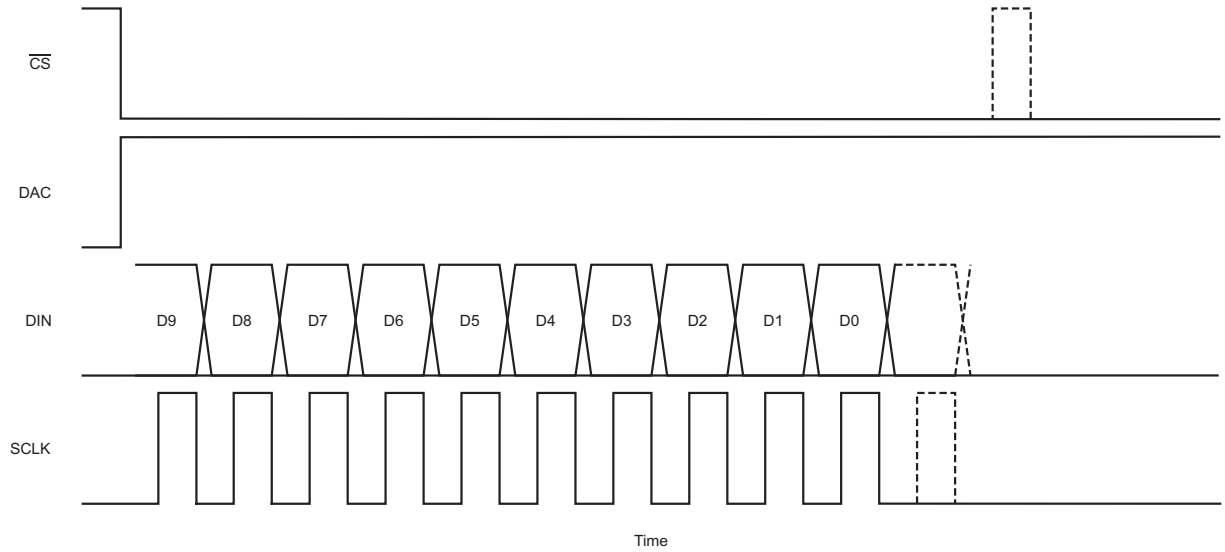

NOTE: Dashed lines indicate optional additional clocks (data are ignored).

Figure 34. Writing to the DAC Register

Table 6 lists the DAC Register configurations.

Table 6. DAC Registers

DAC PIN HIGH: DAC REGISTER <15:0> BIT NAME	LOCATION (0 = LSB)	DEFAULT	R/W	FUNCTION
DAC<0>	0	--	W	Truncated
DAC<1>	1	--	W	Truncated
DAC<2>	2	--	W	Truncated
DAC<3>	3	--	W	Truncated
DAC<4>	4	--	W	Truncated
DAC<5>	5	--	W	Truncated
DAC<6>	6	--	W	DAC bit 0 = DAC LSB
DAC<7>	7	--	W	DAC bit 1
DAC<8>	8	--	W	DAC bit 2
DAC<9>	9	--	W	DAC bit 3
DAC<10>	10	--	W	DAC bit 4
DAC<11>	11	--	W	DAC bit 5
DAC<12>	12	--	W	DAC bit 6
DAC<13>	13	--	W	DAC bit 7
DAC<14>	14	--	W	DAC bit 8
DAC<15>	15	--	W	DAC bit 9 = DAC MSB

Copyright © 2010–2019, Texas Instruments Incorporated

9.2.5 REF1 and REF2 Blocks

The REF1 and REF2 blocks create midscale power-supply biasing points used internally to the AFE031. Each reference divides its respective power-supply voltage in half with a precision resistive voltage divider. REF1 provides a $PA_V_S/2$ voltage used for the PA, while REF2 provides an $AV_{DD}/2$ voltage used for the Tx PGA, Tx Filter, Rx PGA1, Rx Filter, and Rx PGA2. Each REF block has its output brought out to an external pin that can be used for filtering and noise reduction. Figure 35 and Figure 36 show the proper connections of the external noise-reducing capacitors. These capacitors are optional, but are recommended for best performance.

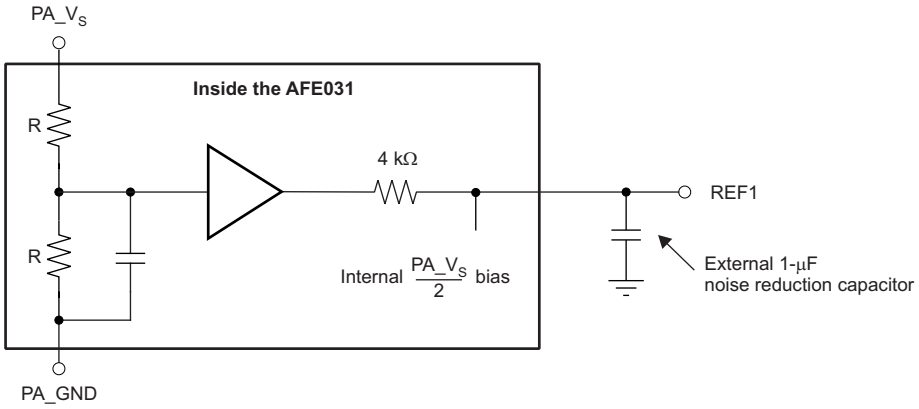

Copyright © 2017, Texas Instruments Incorporated

Figure 35. REF1 Functional Diagram

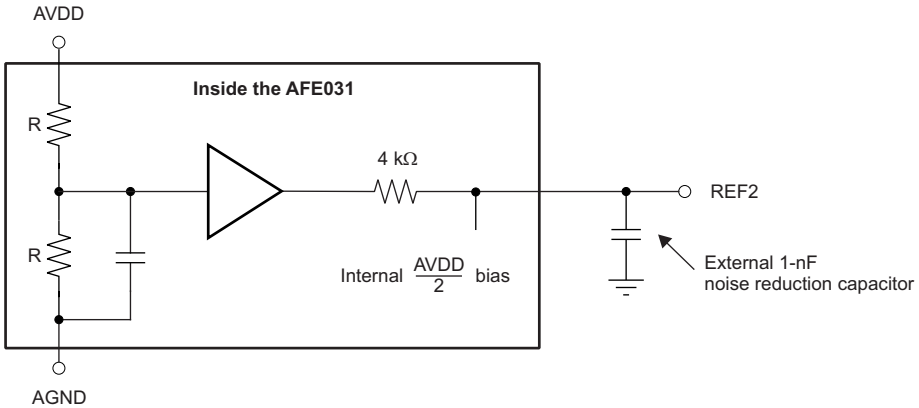

Copyright © 2017, Texas Instruments Incorporated

Figure 36. REF2 Functional Diagram

Copyright © 2010–2019, Texas Instruments Incorporated

9.2.6 Zero Crossing Detector Block

The AFE031 includes two zero crossing detectors. Zero crossing detectors can be used to synchronize communications signals to the ac line or sources of noise. Typically, in single-phase applications, only a single zero crossing detector is used. In three-phase applications, both zero crossing detectors can be used; one component detects phase A, and one detects phase B. Phase C zero crossings can then be inferred from the data gathered from the other phases. Figure 37 shows the AFE031 configured for non-isolated zero crossing detection.

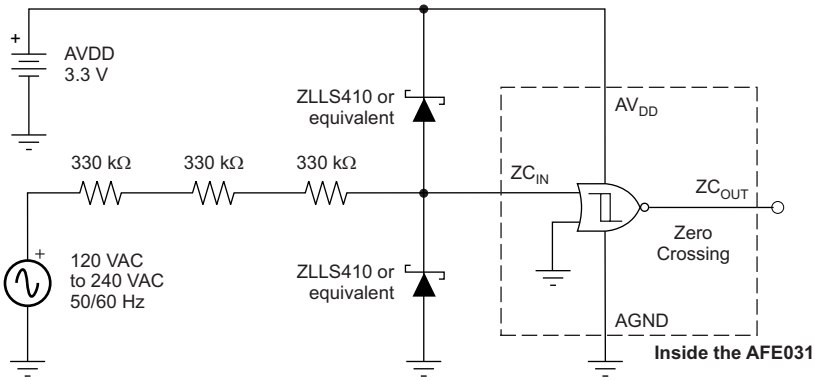

Copyright © 2017, Texas Instruments Incorporated

Figure 37. Non-Isolated Zero Crossing Detection Using the AFE031

Non-isolated zero crossing waveforms are shown in Figure 38.

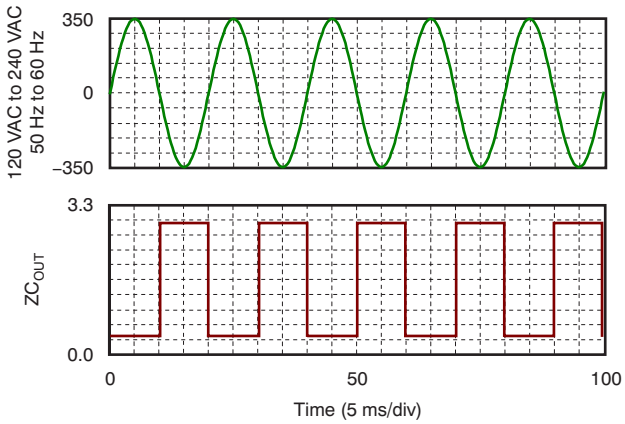

Figure 38. Non-Isolated Zero Crossing Waveforms

For maximum protection of the AFE031 against line transients, it is recommended to use Schottky diodes as indicated in Figure 37. These diodes should limit the ZC_IN pins (pins 38 and 39) to within the maximum rating of (AV_{DD} + 0.4 V) and (AGND – 0.4 V). Some applications may require an isolated zero crossing detection circuit. With a minimal amount of components, the AFE031 can be configured for isolated zero crossing detection, as Figure 39 shows.

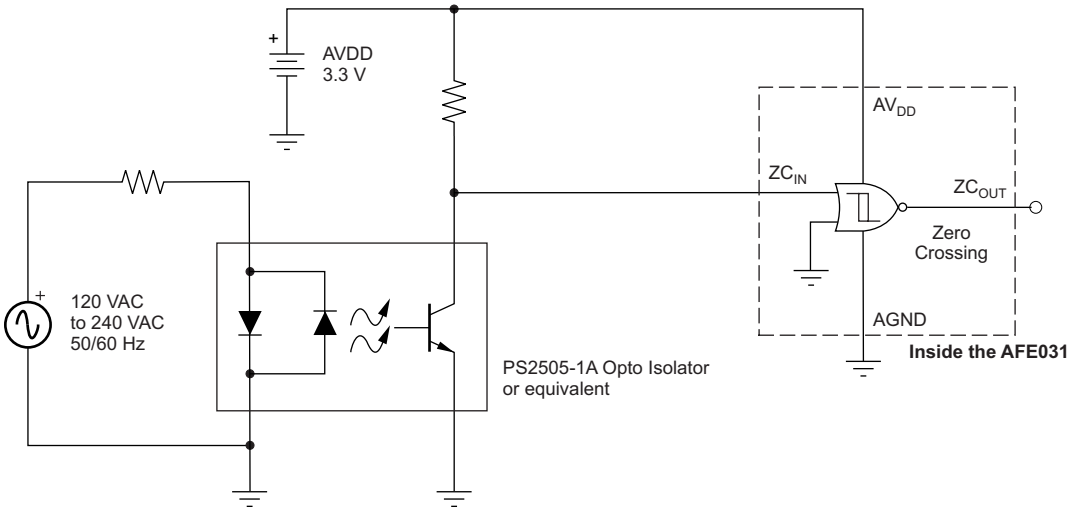

Copyright © 2017, Texas Instruments Incorporated

Figure 39. Isolated Zero Crossing Detection Using the AFE031

Isolated zero crossing waveforms are shown in Figure 40.

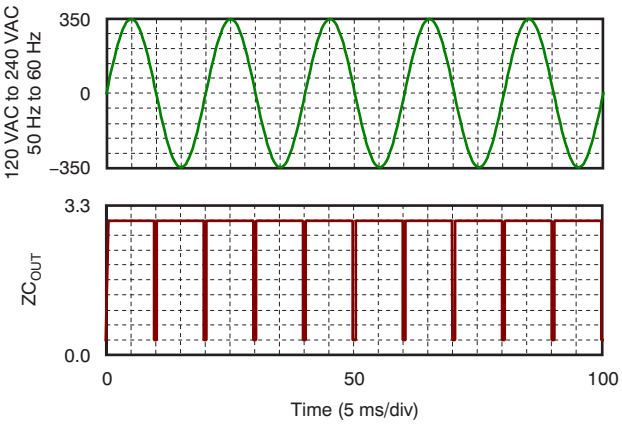

Figure 40. Isolated Zero Crossing Waveforms

Copyright © 2010–2019, Texas Instruments Incorporated

9.2.7 ETx and ERx Blocks

The AFE031 contains a two-wire transmitter block, ETx, and a two-wire receiver block, ERx. These blocks support communications that use amplitude shift keying (ASK) with on-off keying (OOK) modulation.

The ETx block is a gated driver that allows for transmission of a carrier input signal and modulating input signal. For typical applications, a 50-kHz square wave carrier signal is applied to E_Tx_Clk while the modulating signal is applied to E_Tx_In. The output (E_Tx_Out) is then in a high-impedance state when E_Tx_In is '1'. Figure 41 shows the relationship between E_Tx_Clk, E_Tx_In, and E_Tx_Out.

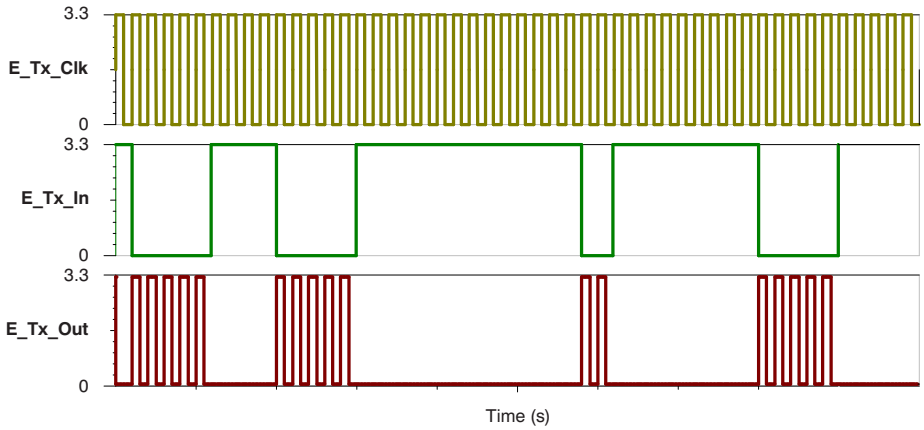

Figure 41. ETx Block Transfer Function

The ERx Block consists of a low-pass analog filter configured in an inverting gain of –4.5 db. This block, along with an external capacitor, can be used to create a passband filter response as shown in Figure 42.

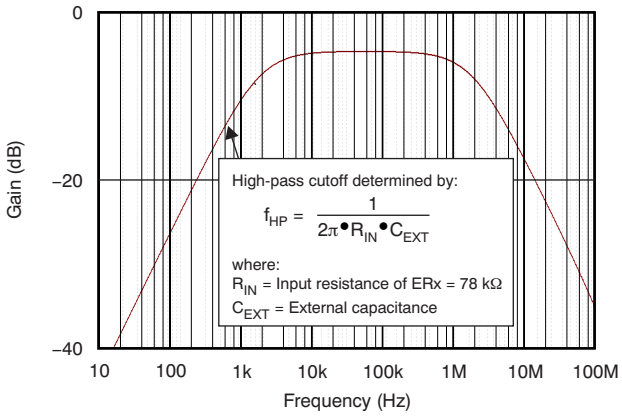

Figure 42. ERx Block Frequency Response

The E_Rx_Out pin can be directly connected to either an available analog-to-digital converter (ADC) input or GPIO on the host microcontroller. Figure 43 illustrates a typical two-wire application for ETx and ERx.

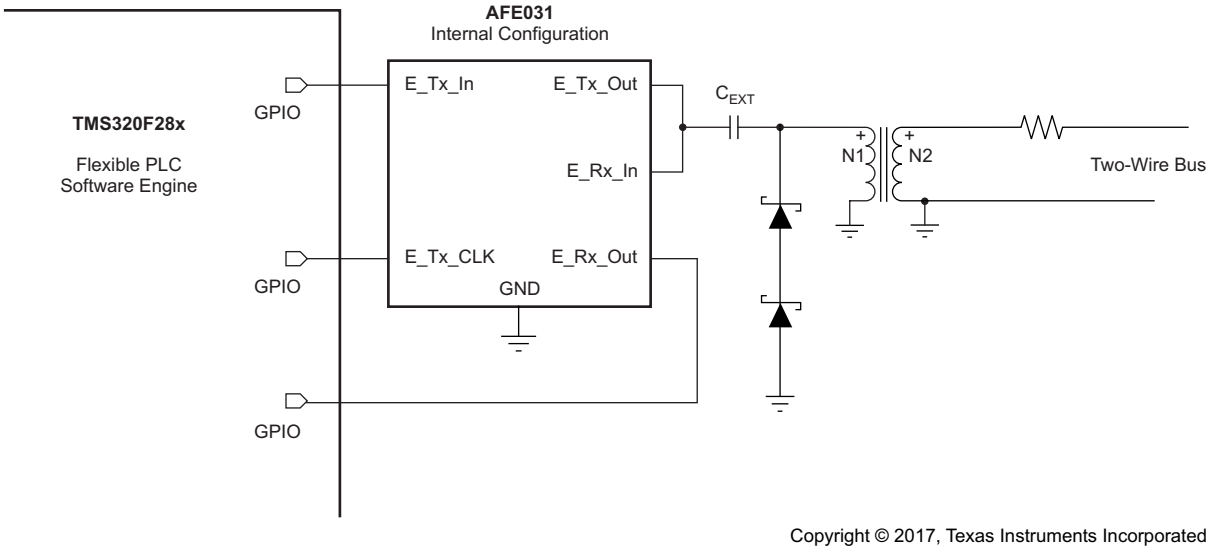

Copyright © 2017, Texas Instruments Incorporated

Figure 43. Typical Two-Wire Application for ETx and ERx

Copyright © 2010–2019, Texas Instruments Incorporated

9.3 Power Supplies

The AFE031 has two low-voltage analog power-supply pins and one low-voltage digital supply pin. Internally, the two analog supply pins are connected to each other through back-to-back electrostatic discharge (ESD) protection diodes. These pins must be connected to each other on the application printed circuit board (PCB). It is also recommended to connect the digital supply pin and the two analog supply pins together on the PCB. Both low-voltage analog ground pins are also connected internally through back-to-back ESD protection diodes. These ground pins should also be connected to the digital ground pin on the PCB. It is recommended to bypass the low-voltage power supplies with a parallel combination of a 10-µf and 100-nf capacitor. The PA block is biased separately from a high-voltage, high-current supply.

Two PA power supply pins and two PA ground pins are available to provide a path for the high currents associated with driving the low impedance of the ac mains. Connecting the two PA supply pins together is recommended. It is also recommended to place a bypass capacitor of 47 µF to 100 µF in parellel with 100 nF as close as possible to the AFE031. Care must be taken when routing the high current ground lines on the PCB to avoid creating voltage drops in the PCB ground that may vary with changes in load current.

The AFE031 has many options to enable or disable the functional blocks to allow for flexible power-savings modes. Table 7 shows the specific power supply that each functional block draws power from, as well as the typical amount of power drawn from the associated power supplies for both the enabled and disabled states. For additional information on power-supply requirements refer to Application Report SBOA130, *Analog Front-End Design for a Narrowband Power-Line Communications Modem Using the AFE031* (available for download at www.ti.com).

Table 7. Power Consumption with Enable and Disable Times (Typical)

BLOCK	STATUS	ENABLE TIME	DISABLE TIME	AVDD SUPPLY CURRENT	DVDD SUPPLY CURRENT	PA SUPPLY CURRENT
PA	On	10 µs	–	–	–	61 mA
	Off	–	10 µs	–	–	70 µA
Tx	On	10 µs	–	3.7 mA	–	–
	Off	–	10 µs	1 µA	–	–
Rx	On	10 µs	–	5.3 mA	–	–
	Off	–	10 µs	1 µA	–	–
ERx	On	10 µs	–	900 µA	–	–
	Off	–	10 µs	1 µA	–	–
ETx	On	10 µs	–	1.2 mA	–	–
	Off	–	10 µs	1 µA	–	–
DAC	On	10 µs	–	–	16 µA	–
	Off	–	10 µs	–	1 µA	–
ZC	On	10 µs	–	25 µA	–	–
	Off	–	10 µs	1 µA	–	–
REF1	On	10 µs	–	–	–	26 µA
	Off	–	10 µs	–	–	8 µA
REF2	On	10 µs	–	25 µA	–	–
	Off	–	10 µs	4 µA	–	–

Copyright © 2010–2019, Texas Instruments Incorporated

9.4 Pin Descriptions

DAC (Pin 7)

The DAC pin is used to configure the SPI to either read or write data to the Command and Data Registers, or to write data to the DAC register. Setting the DAC pin high allows access to the DAC register. Setting the DAC pin low allows access to the Command and Data Registers.

SD (Pin 8)

The Shutdown pin (SD) can be used to shut down the entire AFE031 for maximum power savings. When the SD pin is low, normal operation of the AFE031 occurs. When the SD pin is high, all circuit blocks within the AFE031, including the serial interface, are placed into the lowest-power operating modes. In this condition, the entire AFE031 draws only 95 μA of current. All register contents at the time the AFE031 is placed into shutdown mode are saved; upon re-enabling the AFE031, the register contents retain the respective saved values.

INT Pin (9)

The Interrupt pin (INT) can be used to signal the microprocessor of an unusual operating condition that results from an anomaly on the ac mains. The INTpin can be triggered by two external circuit conditions, depending upon the Enable Register settings. The AFE031 can be programmed to issue an interrupt on these conditions:

- Current Overload
- Thermal Overload

9.4.1 Current Overload

The maximum output current allowed from the Power Amplifier can be programmed with the external R_{SET} resistor connected between PA_ISET (pin 46) and ground. If a fault condition should occur and cause an overcurrent event for the PA, the PA goes into current limit and the I_FLAG bit (location 6 in the RESET Register) is set to a '1' if the I_Flag_EN bit (location 6 in the Control2 Register) is enabled. This configuration results in an interrupt signal at the INT pin. The I_FLAG bit remains set to '1' even after the device returns to normal operation. The I_FLAG bit remains at '1' until it is reset by the microprocessor.

If the I_FLAG_EN bit (location 6 in the Control2 Register) is disabled and a current overload condition occurs, the PA goes into current-limit mode to protect the AFE031; however, the contents of the I_FLAG bit (location 6 in the RESET Register) remain at the respective previous values (presumably '0' for normal operation), and the AFE031 does not issue an interrupt at the INT pin.

9.4.2 Thermal Overload

The AFE031 contains internal protection circuitry that automatically disables the PA output stage if the junction temperature exceeds +150°C. If a fault condition occurs that causes a thermal overload, and if the T_FLAG_EN bit (location 5 in the Control2 Register) is enabled, the T_FLAG bit (location 5 in the RESET Register) is set to a '1'. This configuration results in an interrupt signal at the INT pin. The AFE031 includes a thermal hysteresis and allows the PA to resume normal operation when the junction temperature reduces to +135°C. The T_FLAG bit remains set to a '1' even after the device returns to normal operation. The T_FLAG bit remains '1' until it is reset by the microprocessor.

If the T_FLAG_EN bit (location 5 in the Control2 Register) is disabled and a thermal overload condition occurs, the PA continues to go into thermal limit and protect the AFE031, but the contents of the T_FLAG bit (location 5 in the RESET Register) remain at the previous value (presumably '0' for normal operation), and the AFE031 does not issue an interrupt at the INT pin.

Once an interrupt is signaled (that is, INT goes low), the contents of the I_FLAG and T_FLAG bits can be read by the microprocessor to determine the type of interrupt that occurred. Using the Control2 Register, each interrupt type (current or thermal) can be individually enabled or disabled, allowing full user customization of the INT function. For proper operation of the interrupt pin it is recommended to configure the interrupt enable registers in the Control2 Register by writing to bit locations 5, 6, and 7 following the information in Table 8 after each time the AFE031 is powered on. Failure to properly configure bit locations 5, 6, and 7 after power on may result in unexpected interrupt signals.

Copyright © 2010–2019, Texas Instruments Incorporated

Pin Descriptions (continued)

Table 8 lists the register contents associated with each interrupt condition.

Table 8. Register Contents to Configure the Interrupt Pin

FUNCTION	CONTROL2 REGISTER CONTENTS: DETERMINE INTERRUPT PIN FUNCTIONALITY		
		I_FLAG_EN (CURRENT OVERLOAD)	T_FLAG_EN (THERMAL OVERLOAD)
	D7	D6	D5
POR (default values)	undefined	0	0
No interrupt	0	0	0
Interrupt on thermal overload only	0	0	1
Interrupt on current overload only	0	1	0
Interrupt on thermal or current overload	0	1	1

TSENSE Pin (10)

The TSENSE pin is internally connected to the anode of a temperature-sensing diode located within the PA output stage. Figure 44 shows a remote junction temperature sensor circuit that can be used to measure the junction temperature of AFE031. Measuring the junction temperature of the AFE031 is optional and not required.

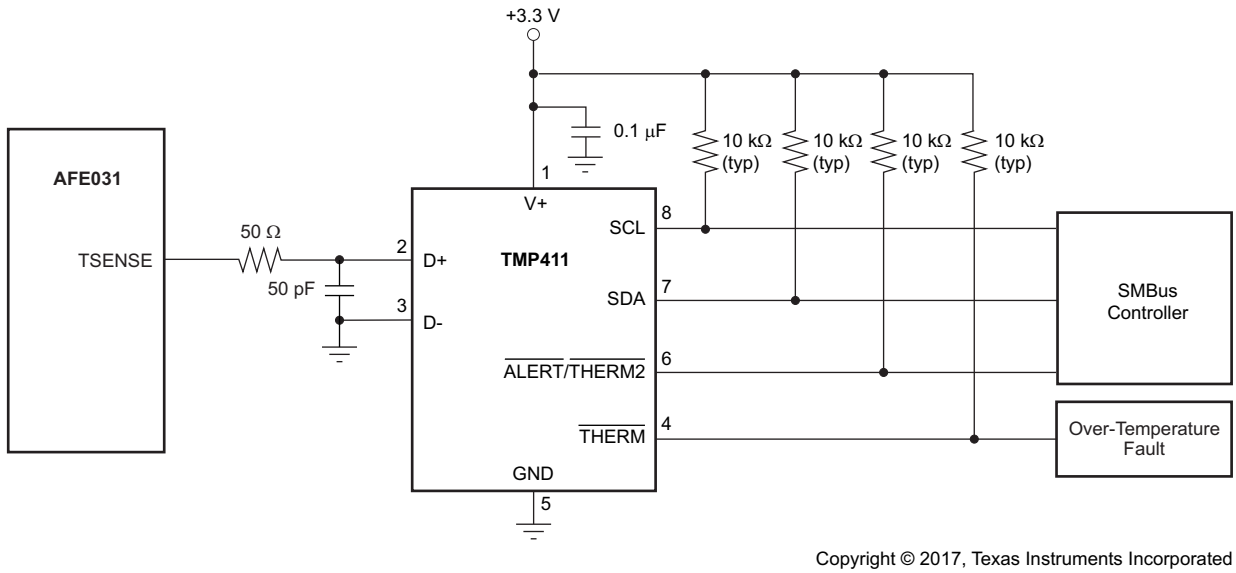

Figure 44. Interfacing the TMP411 to the AFE031

Tx_FLAG (Pin 47)

The Tx_FLAG pin is an open drain output that indicates the readiness of the Tx signal path for transmission. When the Tx_FLAG pin is high, the transmit signal path is enabled and ready for transmission. When the Tx_FLAG pin is low, the transmit path is not ready for transmission.

Rx_FLAG (Pin 48)

The Rx_FLAG pin is an open drain output that indicates the readiness of the Rx signal path for transmission. When the Rx_FLAG pin is high, the transmit signal path is enabled and ready for transmission. When the Rx_FLAG pin is low, the transmit path is not ready for transmission.

9.5 Calibration Modes

The AFE031 can be configured for two different calibration modes: Tx calibration and Rx calibration. Calibration values can be determined during the calibration process and stored in system memory. A one-time calibration can be performed the first time that the system powers on; this calibration remains valid over the full temperature range and operating life of the AFE031, independent of the number of power-on/power-off cycles, as long as the calibration factors remain in the system memory. Calibration mode is accessed through the Control1 Register. Note that calibration is not required.

9.5.1 Tx Calibration Mode

The Tx PGA + Tx Filter ac gain can be calibrated in Tx calibration mode. Figure 45 shows the signal path during Tx calibration mode.

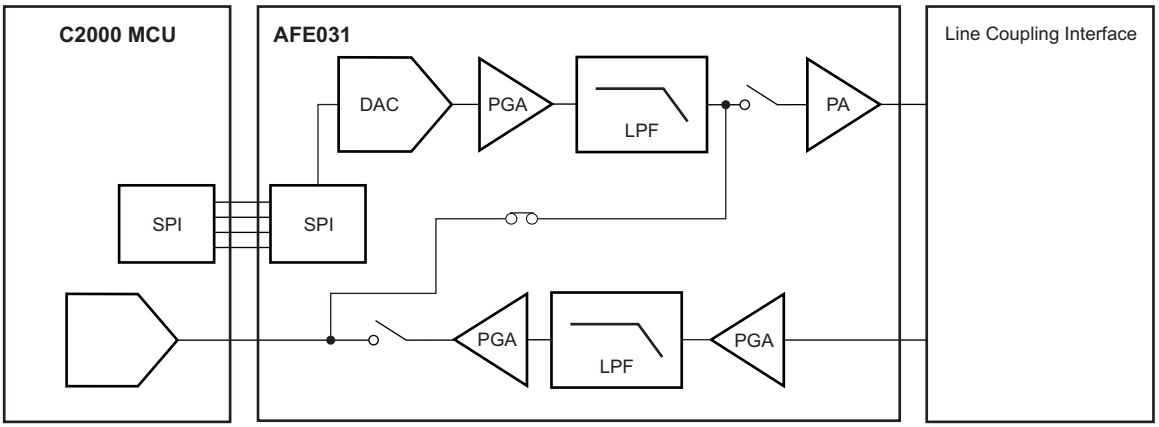

Copyright © 2017, Texas Instruments Incorporated

Figure 45. Tx Calibration Mode Configuration

9.5.2 Rx Calibration Mode

The Tx PGA + Rx PGA1 + Rx Filter + Rx PGA2 ac gain can be calibrated in Rx Calibration mode. Figure 46 shows the signal path during Rx Calibration mode.

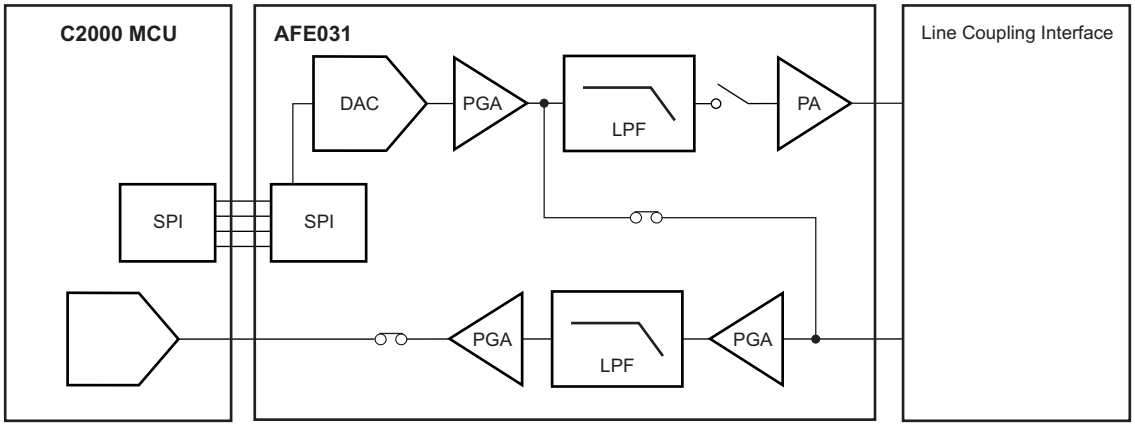

Copyright © 2017, Texas Instruments Incorporated

Figure 46. Rx Calibration Mode Configuration

Copyright © 2010–2019, Texas Instruments Incorporated

9.6 Serial Interface

The AFE031 is controlled through a serial interface that allows read/write access to the control and data registers. A host SPI frame consists of a R/W bit, a 6-bit register address, and eight data bits. Data are shifted out on the falling edge of SCLK and latched on the rising edge of SCLK. Refer to the Timing Diagrams for a valid host SPI communications protocol. Table 9 through Table 18 show the complete register information.

Table 9. Data Register

REGISTER	ADDRESS	DEFAULT	FUNCTION
ENABLE1	0x01	0x00	Block enable or disable
GAIN SELECT	0x02	0x32	Rx and Tx gain select
ENABLE2	0x03	0x00	Block enable or disable
CONTROL1	0x04	0x00	Frequency select and calibration, Tx and Rx status
CONTROL2	0x05	0x01	Interrupt enable
RESET	0x09	0x00	Interrupt status and device reset
DIE_ID	0x0A	0x00	Die name
REVISION	0x0B	0x02	Die revision

Table 10. Command Register

BIT NAME	LOCATION (15 = MSB)	R/W	FUNCTION
ADDR8	8	W	Register address bit
ADDR9	9	W	Register address bit
ADDR10	10	W	Register address bit
ADDR11	11	W	Register address bit
ADDR12	12	W	Register address bit
ADDR13	13	W	Register address bit
ADDR14	14	W	Register address bit
R/W	15	W	Read/write: read = 1, write = 0

Table 11. Enable1 Register: Address 0x01
Default: 0x00

Enable1 Register <7:0>				
BIT NAME	LOCATION (0 = LSB)	DEFAULT	R/W	FUNCTION
PA	0	0	R/W	This bit is used to enable/disable the PA Block. 0 = disabled, 1 = enabled.
TX	1	0	R/W	This bit is used to enable/disable the Tx Block. 0 = disabled, 1 = enabled.
RX	2	0	R/W	This bit is used to enable/disable the Rx Block. 0 = disabled, 1 = enabled.
ERX	3	0	R/W	This bit is used to enable/disable the ERx Block. 0 = disabled, 1 = enabled.
ETX	4	0	R/W	This bit is used to enable/disable the ETx Block. 0 = disabled, 1 = enabled.
DAC	5	0	R/W	This bit is used to enable/disable the DAC Block. 0 = DAC disabled; switch is connected to Tx_PGA_IN pin. 1 = DAC enabled; switch is connected to DAC output.
--	6	0	--	Reserved
--	7	0	--	Reserved

Table 12. Gain Select Register: Address 0x02
Default: 0x32

Gain Select Register <7:0>				
BIT NAME	**LOCATION (0 = LSB)**	**DEFAULT**	**R/W**	**FUNCTION**
RX1G-0, RX1G-1	0, 1	0, 1	R/W	This bit is used to set the gain of the Rx PGA1. 00 = 0.25 V/V 01 = 0.5 V/V 10 = 1 V/V 11 = 2 V/V
RX2G-0, RX2G-1	2, 3	0, 0	R/W	This bit is used to set the gain of the Rx PGA2. 00 = 1 V/V 01 = 4 V/V 10 = 16 V/V 11 = 64 V/V
TXG-0, TXG-1	4, 5	1, 1	R/W	This bit is used to set the gain of the Tx PGA. 00 = 0.25 V/V 01 = 0.5 V/V 10 = 0.707 V/V 11 = 1 V/V
--	6	0	--	Reserved
--	7	0	--	Reserved

Table 13. Enable2 Register: Address 0x03
Default: 0x00

Enable2 Register <7:0>				
BIT NAME	**LOCATION (0 = LSB)**	**DEFAULT**	**R/W**	**FUNCTION**
ZC	0	0	R/W	This bit is used to enable/disable the ZC Block. 0 = disabled, 1 = enabled.
REF1	1	0	R/W	This bit is used to enable/disable the REF1 Block. 0 = disabled, 1 = enabled.
REF2	2	0	R/W	This bit is used to enable/disable the REF2 Block. 0 = disabled, 1 = enabled.
PA_OUT	3	0	R/W	This bit is used to enable/disable the PA output stage. When the PA output stage is enabled it functions normally with a low output impedance, capable of driving heavy loads. When the PA output stage is disabled it is placed into a high impedance state. 0 = disabled, 1 = enabled.
--	4	0	--	Reserved
--	5	0	--	Reserved
--	6	0	--	Reserved
--	7	0	--	Reserved

Copyright © 2010–2019, Texas Instruments Incorporated

Table 14. Control1 Register: Address 0x04
Default: 0x00

Control1 Register <7:0>				
BIT NAME	**LOCATION (0 = LSB)**	**DEFAULT**	**R/W**	**FUNCTION**
TX_CAL	0	0	R/W	This bit is used to enable/disable the TX calibration mode. 0 = disabled, 1 = enabled.
RX_CAL	1	0	R/W	This bit is used to enable/disable the RX calibration mode. 0 = disabled, 1 = enabled.
—	2	0	—	Reserved
CA_CBCD	3	0	R/W	This bit is used to select the frequency response of the Tx Filter and Rx Filter. 0 = CENELEC A 1 = CENELEC B, C, D
--	4	0	--	Reserved
--	5	0	--	Reserved
TX_FLAG	6	0	R	This bit is used to indicate the status of the Tx Block. 0 = Tx Block is not ready for transmission. 1 = Tx Block is ready for transmission.
RX_FLAG	7	0	R	This bit is used to indicate the status of the Rx Block. 0 = Rx Block is not ready for reception. 1 = Rx Block is ready for reception.

Table 15. Control2 Register: Address 0x05
Default: 0x01

Control2 Register <7:0>				
BIT NAME	**LOCATION (0 = LSB)**	**DEFAULT**	**R/W**	**FUNCTION**
--	0	0	--	Reserved
--	1	0	--	Reserved
--	2	0	--	Reserved
--	3	0	--	Reserved
--	4	0	--	Reserved
T_FLAG_EN	5	0	R/W	This bit is used to enable/disable the T_flag bit in the RESET Register. 0 = disabled, 1 = enabled.
I_FLAG_EN	6	0	R/W	This bit is used to enable/disable the I_flag bit in the RESET Register. 0 = disabled, 1 = enabled.
--	7	X	--	Reserved

Copyright © 2010–2019, Texas Instruments Incorporated

Table 16. RESET Register: Address 0x09
Default: 0x00

Reset Register <7:0>				
BIT NAME	**LOCATION (0 = LSB)**	**DEFAULT**	**R/W**	**FUNCTION**
--	0	0	--	Reserved
--	1	0	--	Reserved
SOFTRST0, SOFTRST1, SOFTRST2	2, 3, 4	0, 0, 0	W	These bits are used to perform a software reset of the ENABLE1, ENABLE2, CONTROL2, CONTROL3, and GAIN SELECT registers. Writing '101' to these registers performs a software reset.
T_FLAG	5	0	R/W	This bit is used to indicate the status of a PA thermal overload. 0 = On read, indicates that no thermal overload has occurred since the last reset. 0 = On write, resets this bit. 1 = On read, indicates that a thermal overload has occurred since the last reset. Remains latched until reset.
I_FLAG	6	0	R/W	This bit is used to indicate the status of a PA output current overload. 0 = On read indicates that no current overload has occurred since the last reset. 0 = On write, resets this bit. 1 = On read indicates that a current overload has occurred since the last reset. Remains latched until reset.
--	7	0	--	Reserved

Table 17. DieID Register: Address 0x0A
Default: 0x00

DieID Register <7:0>				
BIT NAME	**LOCATION (0 = LSB)**	**DEFAULT**	**R/W**	**FUNCTION**
DIE ID<0>	0	0	R	The Die ID register is hard-wired.
DIE ID<1>	1	0	R	The Die ID register is hard-wired.
DIE ID<2>	2	0	R	The Die ID register is hard-wired.
DIE ID<3>	3	0	R	The Die ID register is hard-wired.
DIE ID<4>	4	0	R	The Die ID register is hard-wired.
DIE ID<5>	5	0	R	The Die ID register is hard-wired.
DIE ID<6>	6	0	R	The Die ID register is hard-wired.
DIE ID<7>	7	0	R	The Die ID register is hard-wired.

Table 18. Revision Register: Address 0x0B
Default: 0x02

Revision Register <7:0>				
BIT NAME	**LOCATION (0 = LSB)**	**DEFAULT**	**R/W**	**FUNCTION**
REVISION ID<0>	0	0	R	The revision register is hard-wired.
REVISION ID<1>	1	1	R	The revision register is hard-wired.
REVISION ID<2>	2	0	R	The revision register is hard-wired.
REVISION ID<3>	3	0	R	The revision register is hard-wired.
REVISION ID<4>	4	0	R	The revision register is hard-wired.
REVISION ID<5>	5	0	R	The revision register is hard-wired.
REVISION ID<6>	6	0	R	The revision register is hard-wired.
REVISION ID<7>	7	0	R	The revision register is hard-wired.

Copyright © 2010–2019, Texas Instruments Incorporated

10 Application and Implementation

NOTE

Information in the following applications sections is not part of the TI component specification, and TI does not warrant its accuracy or completeness. TI's customers are responsible for determining suitability of components for their purposes. Customers should validate and test their design implementation to confirm system functionality.

10.1 Application Information

The AFE031 is an integrated powerline communication analog front-end (AFE) device built from a variety of functional blocks that work in conjunction with a microcontroller. The AFE031 provides the interface between the microcontroller and a line coupling circuit. The AFE031 delivers high performance and is designed to work with a minimum number of external components. Consisting of a variety of functional and configurable blocks, the AFE031 simplifies design efforts and reduces the time to market of many applications.

The AFE031 includes three primary functional blocks:

- Power Amplifier (PA)
- Transmitter (Tx)
- Receiver (Rx)

The AFE031 also consists of other support circuitry blocks that provide zero crossing detection, an additional two-wire communications channel, and power-saving biasing blocks (see the). All of these functional blocks are digitally controlled by the microcontroller through the serial interface (SPI).

Figure 47 shows a typical powerline communications application system diagram. Table 19 is a complete list of the sections within the AFE031.

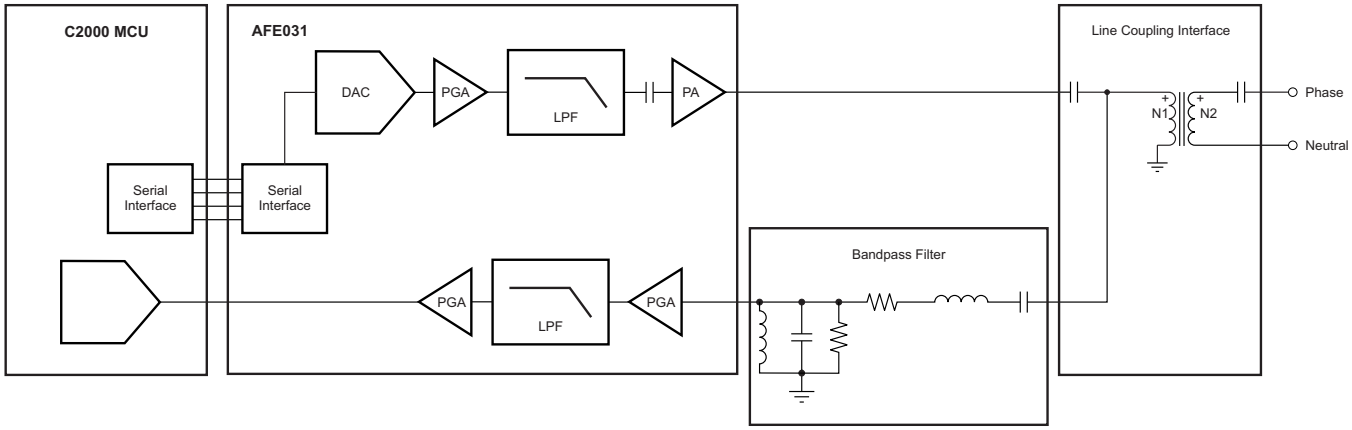

Copyright © 2017, Texas Instruments Incorporated

Figure 47. Typical Powerline Communications System Diagram

Table 19. Block Descriptions

BLOCK	DESCRIPTION
PA	The PA block includes the power amplifier and associated pedestal biasing circuitry
Tx	The Tx block includes the Tx_Filter and the Tx_PGA
Rx	The Rx block includes the Rx PGA1, the Rx Filter, and the Rx PGA2
ERx	The ER block includes the two-wire receiver
ETx	The ER block includes the two-wire transmitter
DAC	The DAC block includes a digital-to-analog converter
ZC	The ZC block includes both zero crossing detectors
REF1	The REF1 block includes the internal bias generator for the PA block
REF2	The REF2 block includes the internal bias generators for the Tx, Rx, ERx, and ETx blocks

10.2 Typical Application

Figure 48 shows the AFE031 configured in a typical PLC analog front-end application. The schematic shows the connections to the microprocessor and ac line. The values of the passive components in Figure 48 are suitable for a single-phase powerline communications application in the CENELEC A band, connected to a 120-VAC or 240-VAC, 50-Hz or 60-Hz ac line.

Copyright © 2010–2019, Texas Instruments Incorporated

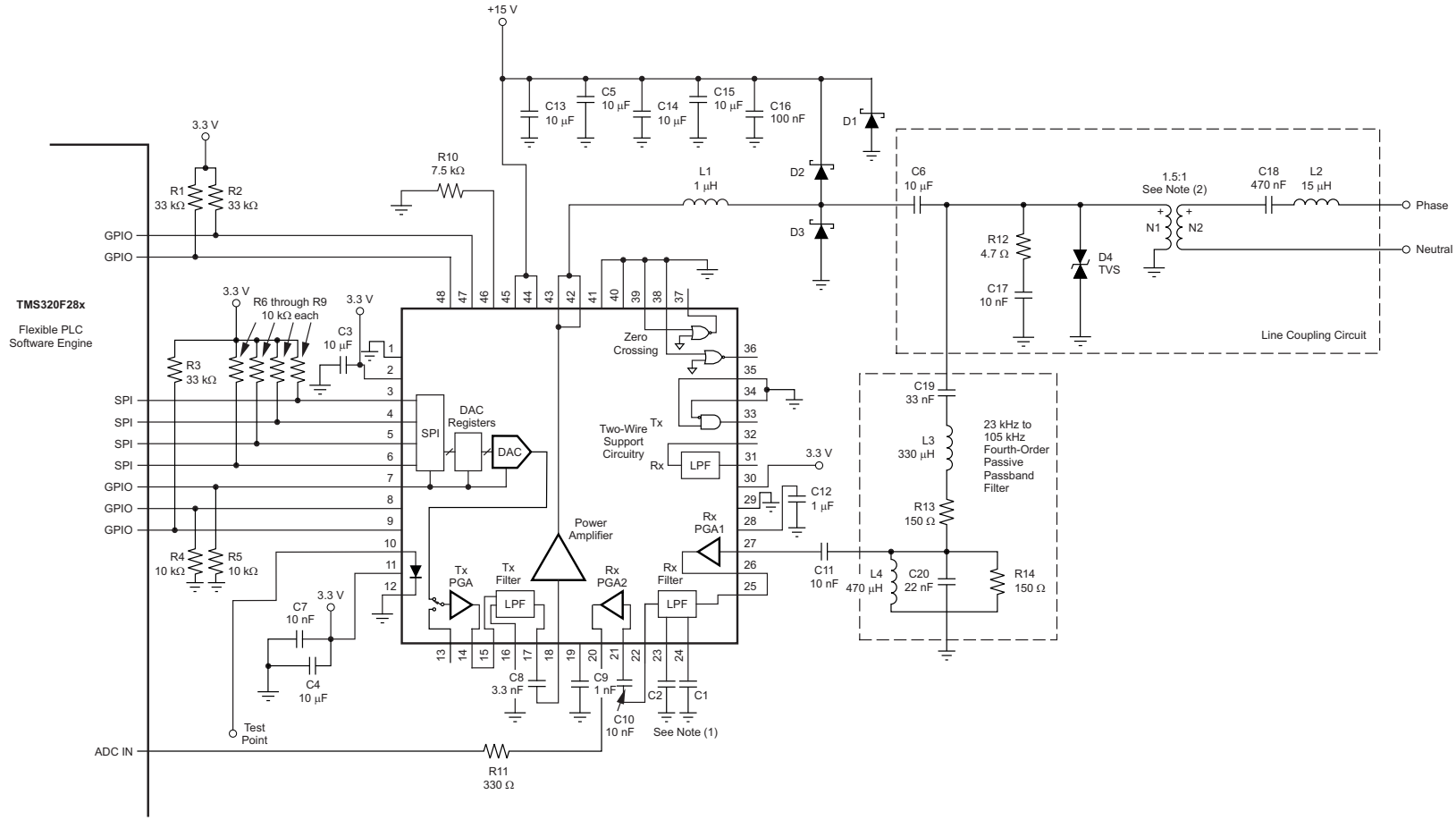

Copyright © 2017, Texas Instruments Incorporated

(1) Recommended values for C1 and C2:

1. C1:
   - CENELEC A: 680 pF
   - CENELEC B, C, D: 270 pF
2. C2:
   - CENELEC A: 680 pF
   - CENELEC B, C, D: 560 pF

Figure 48. Typical Powerline Communications Modem Application

10.2.1 Detailed Design Procedure

10.2.1.1 Line-Coupling Circuit

The line-coupling circuit is one of the most critical circuits in a powerline modem. The line-coupling circuit has two primary functions: first, to block the low-frequency signal of the mains (commonly 50 Hz or 60 Hz) from damaging the low-voltage modem circuitry; second, to couple the modem signal to and from the ac mains. A typical line-coupling circuit is shown in Figure 49.

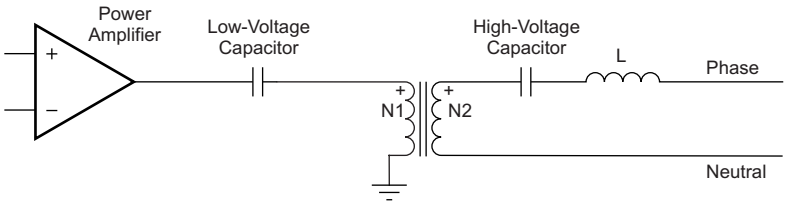

Copyright © 2017, Texas Instruments Incorporated

Figure 49. Simplified Line Coupling Circuit

For additional information on line-coupling interfaces with the AFE031, refer to Application Report SBOA130, *Analog Front-End Design for a Narrowband Power-Line Communications Modem Using the AFE031*, available for download at www.ti.com.

10.2.1.2 Circuit Protection

Powerline communications are often located in operating environments that are harsh for electrical components connected to the ac line. Noise or surges from electrical anomalies such as lightning, capacitor bank switching, inductive switching, or other grid fault conditions can damage high-performance integrated circuits if they are not properly protected. The AFE031 can survive even the harshest conditions if several recommendations are followed.

First, dissipate as much of the electrical disturbance before it reaches the AFE031 with a multi-layer approach using metal-oxide varistors (MOVs), transient voltage suppression diodes (TVSs), Schottky diodes, and a Zener diode. Figure 50 shows the recommended strategy for transient overvoltage protection.

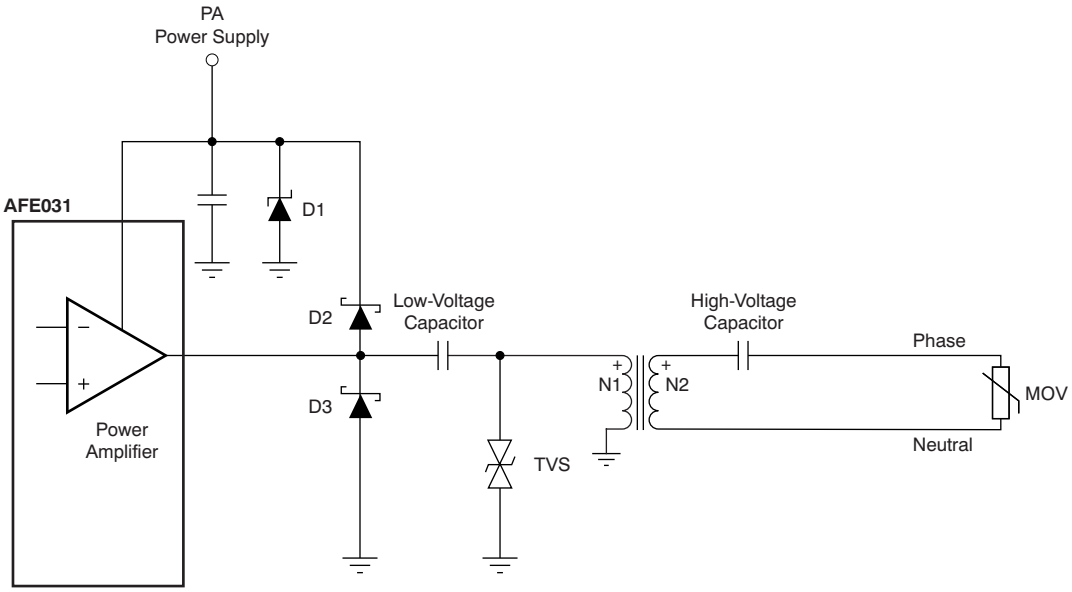

Figure 50. Transient Overvoltage Protection for AFE031

Copyright © 2010–2019, Texas Instruments Incorporated

Note that the high-voltage coupling capacitor must be able to withstand pulses up to the clamping protection provided by the MOV. A metalized polypropylene capacitor, such as the 474MKP275KA from Illinois Capacitor, Inc., is rated for 50 Hz to 60 Hz, 250 VAC to 310 VAC, and can withstand 24 impulses of 2.5 kV.

Table 20 lists several recommended transient protection components.

Table 20. Recommended Transient Protection Devices

COMPONENT	120 VAC, 60 Hz		
	DESCRIPTION	MANUFACTURER	MFR PART NO (OR EQUIVALENT)
D1	Zener diode	Diodes, Inc.	1SMB59xxB (1)
D2, D3	Schottky diode	Diodes, Inc.	1N5819HW
TVS	Transient voltage suppressor	Diodec Semiconductor	P6SMBJxxC (2)
MOV	Varistor	LittleFuse	TMOV20RP140E
HV Cap	High-voltage capacitor	Illinois Capacitor, Inc	474MKP275KA (3)
COMPONENT	**240 VAC, 50 Hz**		
	DESCRIPTION	**MANUFACTURER**	**MFR PART NO (OR EQUIVALENT)**
D1	Zener diode	Diodes, Inc.	1SMB59xxB (1)
D2, D3	Schottky diode	Diodes, Inc.	1N5819HW
TVS	Transient voltage suppressor	Diodec Semiconductor	P6SMBJxxC (2)
MOV	Varistor	LittleFuse	TMOV20RP300E
HV Cap	High-voltage capacitor	Illinois Capacitor, Inc	474MKP275KA (3)

(1) Select the Zener breakdown voltage at the lowest available rating beyond the normal power-supply operating range.
(2) Select the TVS breakdown voltage at or slightly greater than (0.5 ● PA_V_S).
(3) A common value for the high-voltage capacitor is 470 nF. Other values may be substituted depending on the requirements of the application. Note that when making a substitution, it is important in terms of reliability that the capacitor be selected from the same familiy or equivalent family of capacitors rated to withstand high-voltage surges.

10.2.1.3 Thermal Considerations

In a typical powerline communications application, the AFE031 dissipates 2 W of power when transmitting into the low impedance of the ac line. This amount of power dissipation can increase the junction temperature, which in turn can lead to a thermal overload that results in signal transmission interruptions if the proper thermal design of the PCB has not been performed. Proper management of heat flow from the AFE031 as well as good PCB design and construction are required to ensure proper device temperature, maximize performance, and extend device operating life.

The AFE031 is assembled into a 7-mm^2 x 7-mm^2, 48-lead, QFN package. As Figure 51 shows, this QFN package has a large area exposed thermal pad on the underside that is used to conduct heat away from the AFE031 and into the underlying PCB.

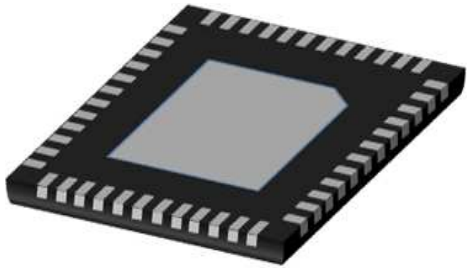

Figure 51. QFN Package with Large Area Exposed Thermal Pad

Some heat is conducted from the silicon die surface through the plastic packaging material and is transferred into the ambient environment. Because plastic is a relatively poor conductor of heat, however, this route is not the primary thermal path for heat flow. Heat also flows across the silicon die surface to the bond pads, through the wire bonds, into the package leads, and finally into the top layer of the PCB. While both of these paths for heat flow are important, the majority (nearly 80%) of the heat flows downward, through the silicon die, into the thermally-conductive die attach epoxy, and into the exposed thermal pad on the underside of the package (see Figure 52). Minimizing the thermal resistance of this downward path to the ambient environment maximizes the life and performance of the device.

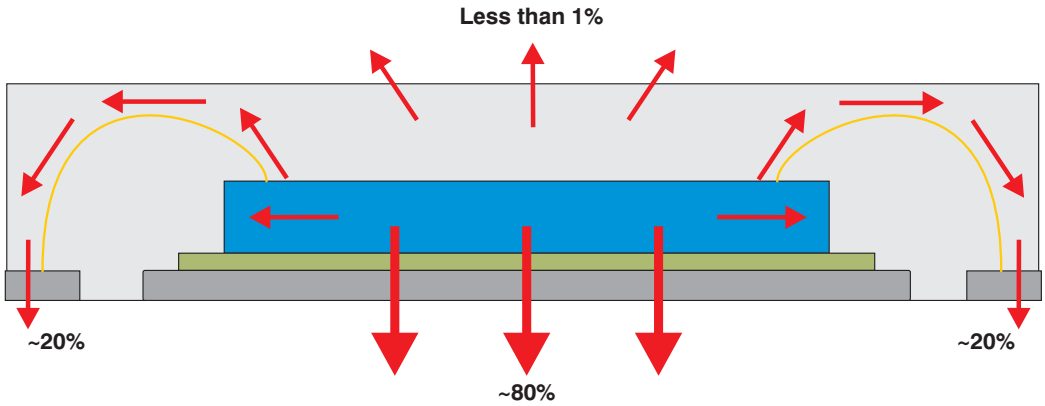

Figure 52. Heat Flow in the QFN Package

The exposed thermal pad must be soldered to the PCB thermal pad. The thermal pad on the PCB should be the same size as the exposed thermal pad on the underside of the QFN package. Refer to Application Report, *QFN/SON PCB Attachment*, literature number SLUA271A, for recommendations on attaching the thermal pad to the PCB. Figure 53 illustrates the direction of heat spreading into the PCB from the device.

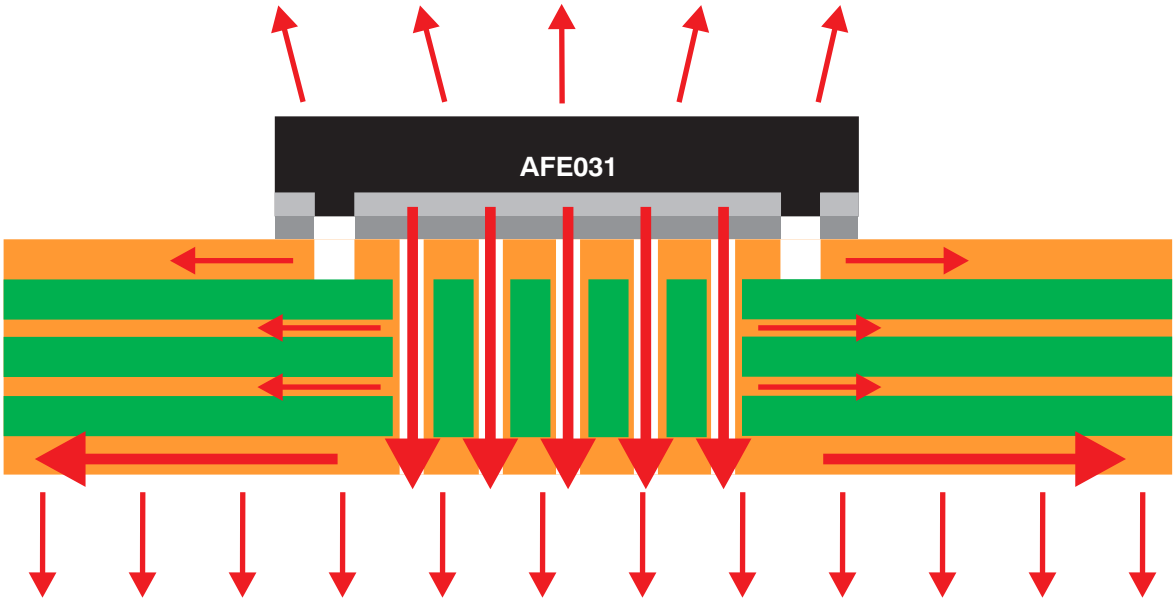

Figure 53. Heat Spreading into PCB

The heat spreading into the PCB is maximized if the thermal path is uninterrupted. Best results are achieved if the heat-spreading surfaces are filled with copper to the greatest extent possible, maximizing the percent area covered on each layer. As an example, a thermally robust, multilayer PCB design may consist of four layers with copper (Cu) coverage of 60% in the top layer, 85% and 90% in the inner layers, respectively, and 95% on the bottom layer.

Copyright © 2010–2019, Texas Instruments Incorporated

Increasing the number of layers in the PCB, using thicker copper, and increasing the PCB area are all factors that improve the spread of heat. Figure 54 through Figure 56, respectively, show thermal resistance performance as a function of each of these factors.

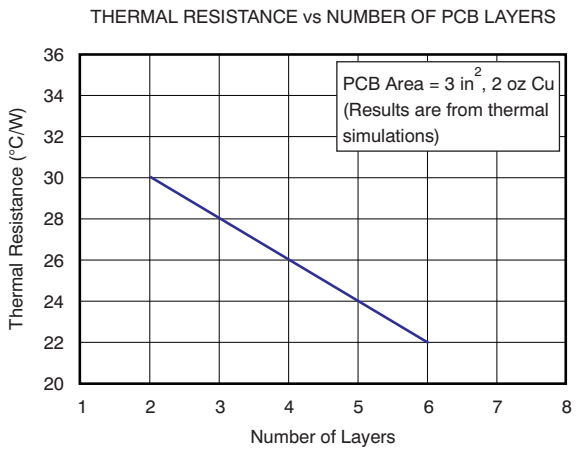

Figure 54. Thermal Resistance as a Function of the Number of Layers in the PCB

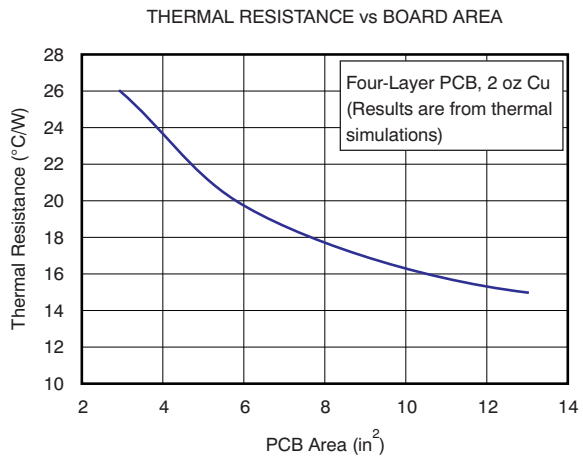

Figure 55. Thermal Resistance as a Function of PCB Area

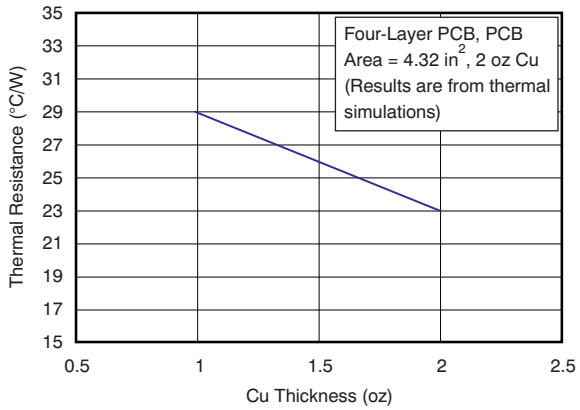

Figure 56. Thermal Resistance as a Function of Copper Thickness

For additional information on thermal PCB design using exposed thermal pad packages, refer to Application Report *Analog Front-End Design for a Narrowband Power-Line Communications Modem Using the AFE031* and Application Report *PowerPAD™ Thermally-Enhanced Package*; both documents available for download at www.ti.com).

11 Device and Documentation Support

11.1 Device Support

11.1.1 Third-Party Products Disclaimer

TI'S PUBLICATION OF INFORMATION REGARDING THIRD-PARTY PRODUCTS OR SERVICES DOES NOT CONSTITUTE AN ENDORSEMENT REGARDING THE SUITABILITY OF SUCH PRODUCTS OR SERVICES OR A WARRANTY, REPRESENTATION OR ENDORSEMENT OF SUCH PRODUCTS OR SERVICES, EITHER ALONE OR IN COMBINATION WITH ANY TI PRODUCT OR SERVICE.

11.1.2 Development Support

11.1.2.1 Powerline Communications Developer's Kit

A PLC developer's kit (TMDSPLCKIT-V3) is available to order at www.ti.com/plc. This kit offers complete hardware and software solutions for introducing flexible, efficient, and reliable networking capabilities to a wide variety of applications. With unique modular hardware architecture and flexible software framework, TI's PLC solutions are the only PLC-based technology capable of supporting multiple protocol standards and modulation schemes with a single platform. This technology enables designers to leverage product lines across global markets. The flexibility of the platform also allows developers to optimize hardware and software performance for specific environmental operating conditions while simplifying end-to-end product design. Based on TI's powerful C2000™ microcontroller architecture and the AFE031, developers can select the correct blend of processing capacity and peripherals to either add powerline communications to an existing design or implement a complete application with PLC communications.

The C2000 Powerline Modem Developer's Kit enables easy development of software-based PLC modems. The kit includes two PLC modems based on the C2000 TMS320F28069 controlCARD and the AFE031. The included PLC SUITE software supports several communication techniques, including OFDM (PRIME/G3 and FlexOFDM) and SFSK. The kit also includes onboard USB JTAG emulation and Code Composer Studio.

11.1.2.2 TINA-TI™ (Free Software Download)

TINA™ is a simple, powerful, and easy-to-use circuit simulation program based on a SPICE engine. TINA-TI™ is a free, fully-functional version of the TINA software, preloaded with a library of macro models in addition to a range of both passive and active models. TINA-TI provides all the conventional DC, transient, and frequency domain analysis of SPICE, as well as additional design capabilities.

Available as a free download from the Analog eLab Design Center, TINA-TI offers extensive post-processing capability that allows users to format results in a variety of ways. Virtual instruments offer the ability to select input waveforms and probe circuit nodes, voltages, and waveforms, creating a dynamic quick-start tool.

NOTE

These files require that either the TINA software (from DesignSoft™) or TINA-TI software be installed. Download the free TINA-TI software from the TINA-TI folder.

11.1.2.3 TI Precision Designs

TI Precision Designs are analog solutions created by TI's precision analog applications experts and offer the theory of operation, component selection, simulation, complete PCB schematic and layout, bill of materials, and measured performance of many useful circuits. TI Precision Designs are available online at http://www.ti.com/ww/en/analog/precision-designs/.

11.1.2.4 WEBENCH® Filter Designer

WEBENCH® Filter Designer is a simple, powerful, and easy-to-use active filter design program. The WEBENCH Filter Designer lets you create optimized filter designs using a selection of TI operational amplifiers and passive components from TI's vendor partners.

Available as a web-based tool from the WEBENCH® Design Center, WEBENCH® Filter Designer allows you to design, optimize, and simulate complete multistage active filter solutions within minutes.

Copyright © 2010–2019, Texas Instruments Incorporated

11.2 Documentation Support

11.2.1 Related Documentation

For related documentation, see the following application reports and publications (available for download from www.ti.com):

- *AFE Design for a Narrowband Power-Line Communications Modem Using the AFE031*
- *TINA Simulation Schematic of a Two-Node, Power-Line Communication System*
- *PowerPAD™ Thermally-Enhanced Package*
- *Microcontrollers in Data Concentrators*
- *The Signal e-book: A compendium of blog posts on op amp design topics*

11.3 Receiving Notification of Documentation Updates

To receive notification of documentation updates, navigate to the device product folder on ti.com. In the upper right corner, click on *Alert me* to register and receive a weekly digest of any product information that has changed. For change details, review the revision history included in any revised document.

11.4 Community Resources

The following links connect to TI community resources. Linked contents are provided "AS IS" by the respective contributors. They do not constitute TI specifications and do not necessarily reflect TI's views; see TI's Terms of Use.

TI E2E™ Online Community ***TI's Engineer-to-Engineer (E2E) Community.*** Created to foster collaboration among engineers. At e2e.ti.com, you can ask questions, share knowledge, explore ideas and help solve problems with fellow engineers.

Design Support ***TI's Design Support*** Quickly find helpful E2E forums along with design support tools and contact information for technical support.

11.5 Trademarks

PowerPAD, C2000, TINA-TI, E2E are trademarks of Texas Instruments.
WEBENCH is a registered trademark of Texas Instruments.
TINA, DesignSoft are trademarks of DesignSoft, Inc.
SPI is a trademark of Motorola, Inc.
All other trademarks are the property of their respective owners.

11.6 Electrostatic Discharge Caution

This integrated circuit can be damaged by ESD. Texas Instruments recommends that all integrated circuits be handled with appropriate precautions. Failure to observe proper handling and installation procedures can cause damage.

ESD damage can range from subtle performance degradation to complete device failure. Precision integrated circuits may be more susceptible to damage because very small parametric changes could cause the device not to meet its published specifications.

11.7 Glossary

SLYZ022 — *TI Glossary*.

This glossary lists and explains terms, acronyms, and definitions.

12 Mechanical, Packaging, and Orderable Information

The following pages include mechanical, packaging, and orderable information. This information is the most current data available for the designated devices. This data is subject to change without notice and revision of this document. For browser-based versions of this data sheet, refer to the left-hand navigation.

PACKAGING INFORMATION

Orderable Device	Status (1)	Package Type	Package Drawing	Pins	Package Qty	Eco Plan (2)	Lead/Ball Finish (6)	MSL Peak Temp (3)	Op Temp (°C)	Device Marking (4/5)	Samples
AFE031AIRGZR	ACTIVE	VQFN	RGZ	48	2500	Green (RoHS & no Sb/Br)	NIPDAU | NIPDAUAG	Level-3-260C-168 HR	-40 to 125	AFE031AI	Samples
AFE031AIRGZT	ACTIVE	VQFN	RGZ	48	250	Green (RoHS & no Sb/Br)	NIPDAU | NIPDAUAG	Level-3-260C-168 HR	-40 to 125	AFE031AI	Samples

(1) The marketing status values are defined as follows:
ACTIVE: Product device recommended for new designs.
LIFEBUY: TI has announced that the device will be discontinued, and a lifetime-buy period is in effect.
NRND: Not recommended for new designs. Device is in production to support existing customers, but TI does not recommend using this part in a new design.
PREVIEW: Device has been announced but is not in production. Samples may or may not be available.
OBSOLETE: TI has discontinued the production of the device.

(2) **RoHS:** TI defines "RoHS" to mean semiconductor products that are compliant with the current EU RoHS requirements for all 10 RoHS substances, including the requirement that RoHS substance do not exceed 0.1% by weight in homogeneous materials. Where designed to be soldered at high temperatures, "RoHS" products are suitable for use in specified lead-free processes. TI may reference these types of products as "Pb-Free".
RoHS Exempt: TI defines "RoHS Exempt" to mean products that contain lead but are compliant with EU RoHS pursuant to a specific EU RoHS exemption.
Green: TI defines "Green" to mean the content of Chlorine (Cl) and Bromine (Br) based flame retardants meet JS709B low halogen requirements of <=1000ppm threshold. Antimony trioxide based flame retardants must also meet the <=1000ppm threshold requirement.

(3) MSL, Peak Temp. - The Moisture Sensitivity Level rating according to the JEDEC industry standard classifications, and peak solder temperature.

(4) There may be additional marking, which relates to the logo, the lot trace code information, or the environmental category on the device.

(5) Multiple Device Markings will be inside parentheses. Only one Device Marking contained in parentheses and separated by a "~" will appear on a device. If a line is indented then it is a continuation of the previous line and the two combined represent the entire Device Marking for that device.

(6) Lead/Ball Finish - Orderable Devices may have multiple material finish options. Finish options are separated by a vertical ruled line. Lead/Ball Finish values may wrap to two lines if the finish value exceeds the maximum column width.

Important Information and Disclaimer: The information provided on this page represents TI's knowledge and belief as of the date that it is provided. TI bases its knowledge and belief on information provided by third parties, and makes no representation or warranty as to the accuracy of such information. Efforts are underway to better integrate information from third parties. TI has taken and continues to take reasonable steps to provide representative and accurate information but may not have conducted destructive testing or chemical analysis on incoming materials and chemicals. TI and TI suppliers consider certain information to be proprietary, and thus CAS numbers and other limited information may not be available for release.

In no event shall TI's liability arising out of such information exceed the total purchase price of the TI part(s) at issue in this document sold by TI to Customer on an annual basis.

TAPE AND REEL INFORMATION

REEL DIMENSIONS

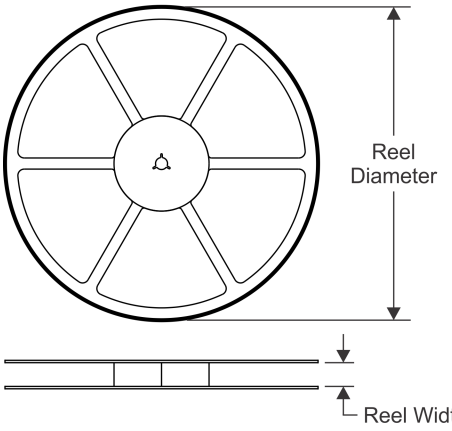

TAPE DIMENSIONS

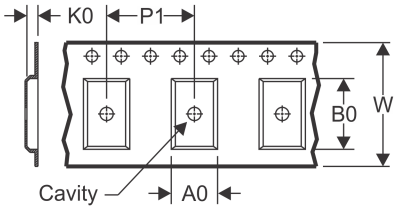

A0	Dimension designed to accommodate the component width
B0	Dimension designed to accommodate the component length
K0	Dimension designed to accommodate the component thickness
W	Overall width of the carrier tape
P1	Pitch between successive cavity centers

QUADRANT ASSIGNMENTS FOR PIN 1 ORIENTATION IN TAPE

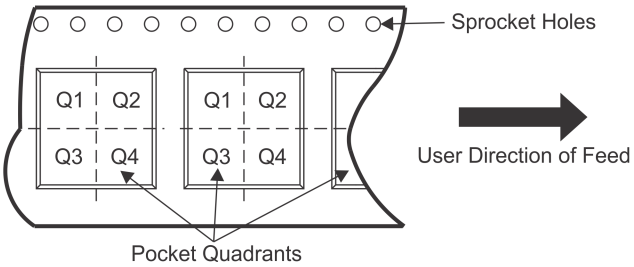

*All dimensions are nominal

Device	Package Type	Package Drawing	Pins	SPQ	Reel Diameter (mm)	Reel Width W1 (mm)	A0 (mm)	B0 (mm)	K0 (mm)	P1 (mm)	W (mm)	Pin1 Quadrant
AFE031AIRGZR	VQFN	RGZ	48	2500	330.0	16.4	7.25	7.25	1.1	12.0	16.0	Q2
AFE031AIRGZR	VQFN	RGZ	48	2500	330.0	16.4	7.3	7.3	1.1	12.0	16.0	Q2
AFE031AIRGZT	VQFN	RGZ	48	250	180.0	16.4	7.3	7.3	1.1	12.0	16.0	Q2
AFE031AIRGZT	VQFN	RGZ	48	250	330.0	16.4	7.25	7.25	1.1	12.0	16.0	Q2

TAPE AND REEL BOX DIMENSIONS

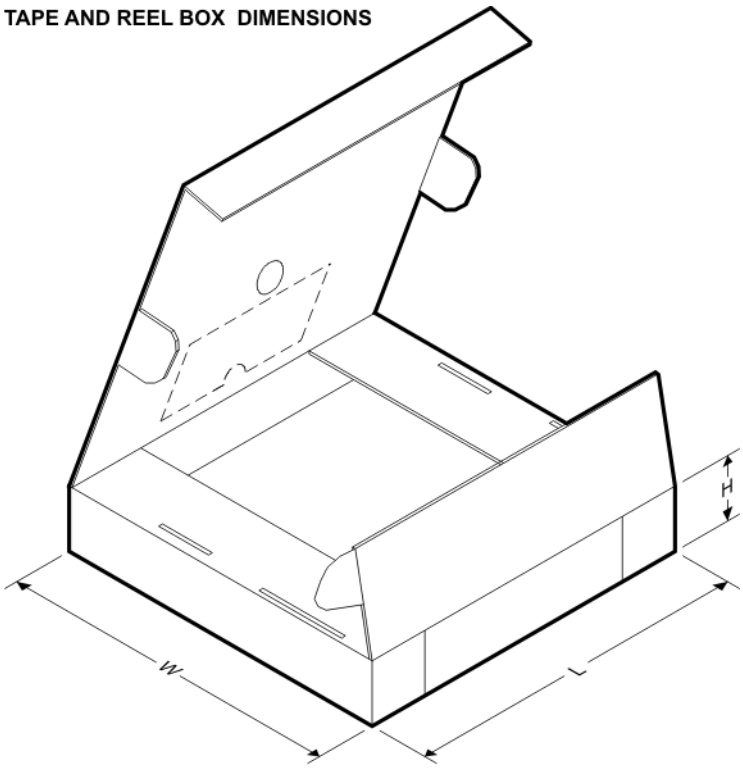

*All dimensions are nominal

Device	Package Type	Package Drawing	Pins	SPQ	Length (mm)	Width (mm)	Height (mm)
AFE031AIRGZR	VQFN	RGZ	48	2500	338.0	355.0	50.0
AFE031AIRGZR	VQFN	RGZ	48	2500	367.0	367.0	38.0
AFE031AIRGZT	VQFN	RGZ	48	250	210.0	185.0	35.0
AFE031AIRGZT	VQFN	RGZ	48	250	338.0	355.0	50.0

GENERIC PACKAGE VIEW

RGZ 48

VQFN - 1 mm max height

7 x 7, 0.5 mm pitch

PLASTIC QUADFLAT PACK- NO LEAD

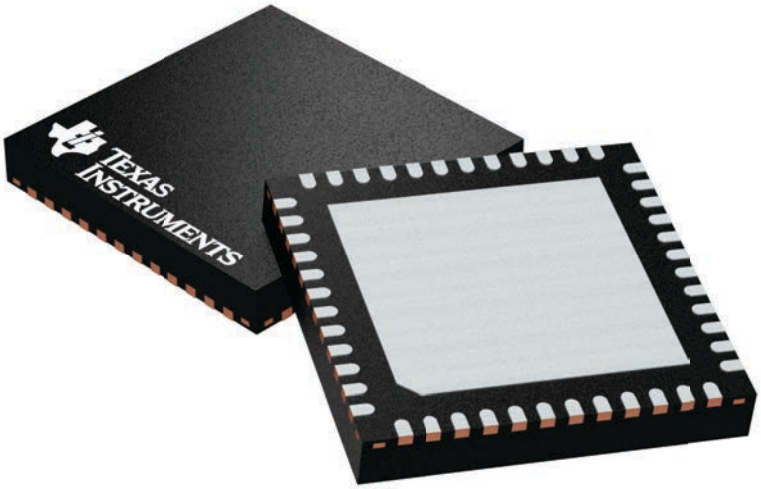

Images above are just a representation of the package family, actual package may vary.
Refer to the product data sheet for package details.

4224671/A

RGZ0048B

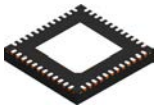

PACKAGE OUTLINE

VQFN - 1 mm max height

PLASTIC QUAD FLATPACK - NO LEAD

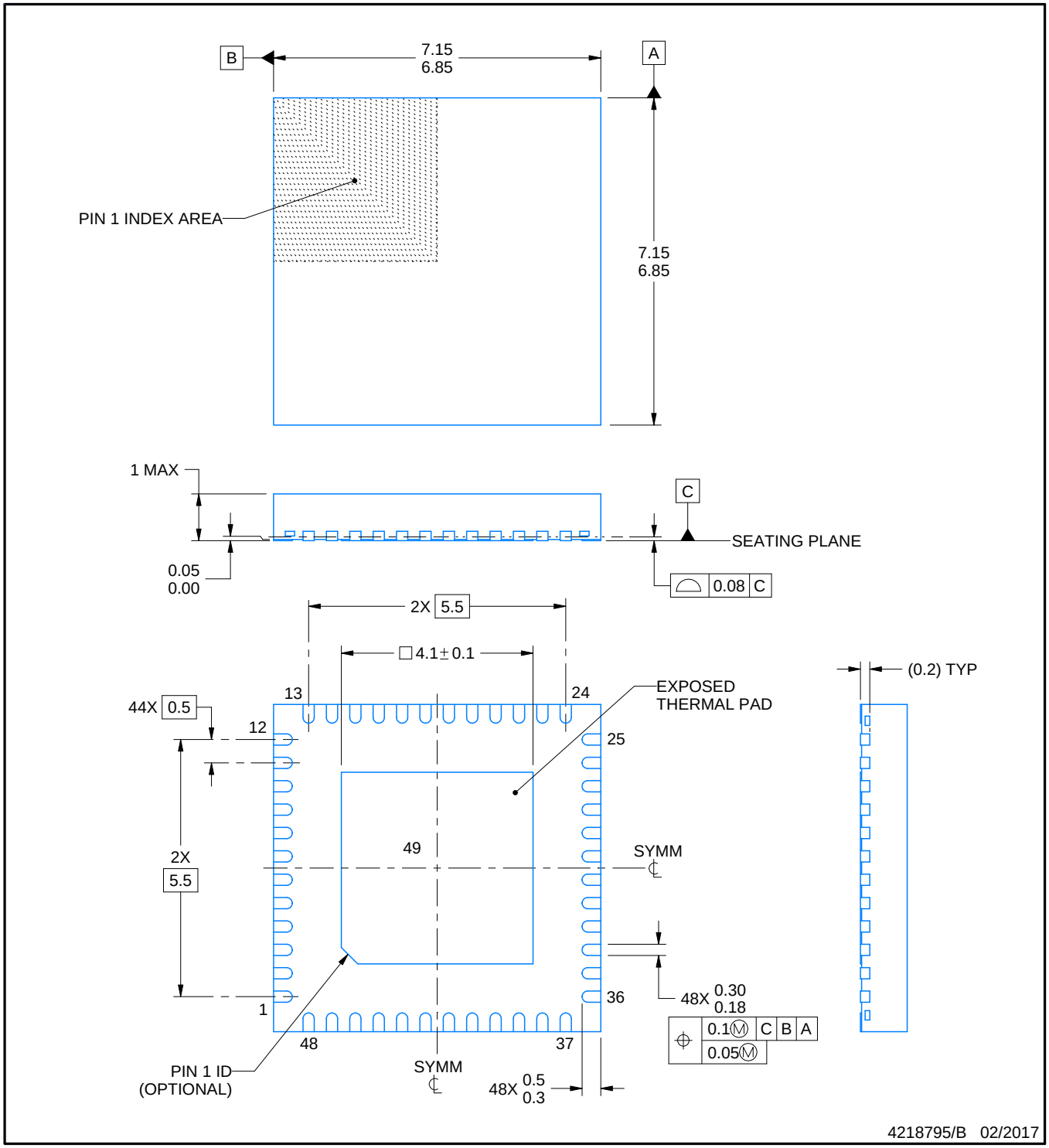

NOTES:

1. All linear dimensions are in millimeters. Any dimensions in parenthesis are for reference only. Dimensioning and tolerancing per ASME Y14.5M.
2. This drawing is subject to change without notice.
3. The package thermal pad must be soldered to the printed circuit board for thermal and mechanical performance.

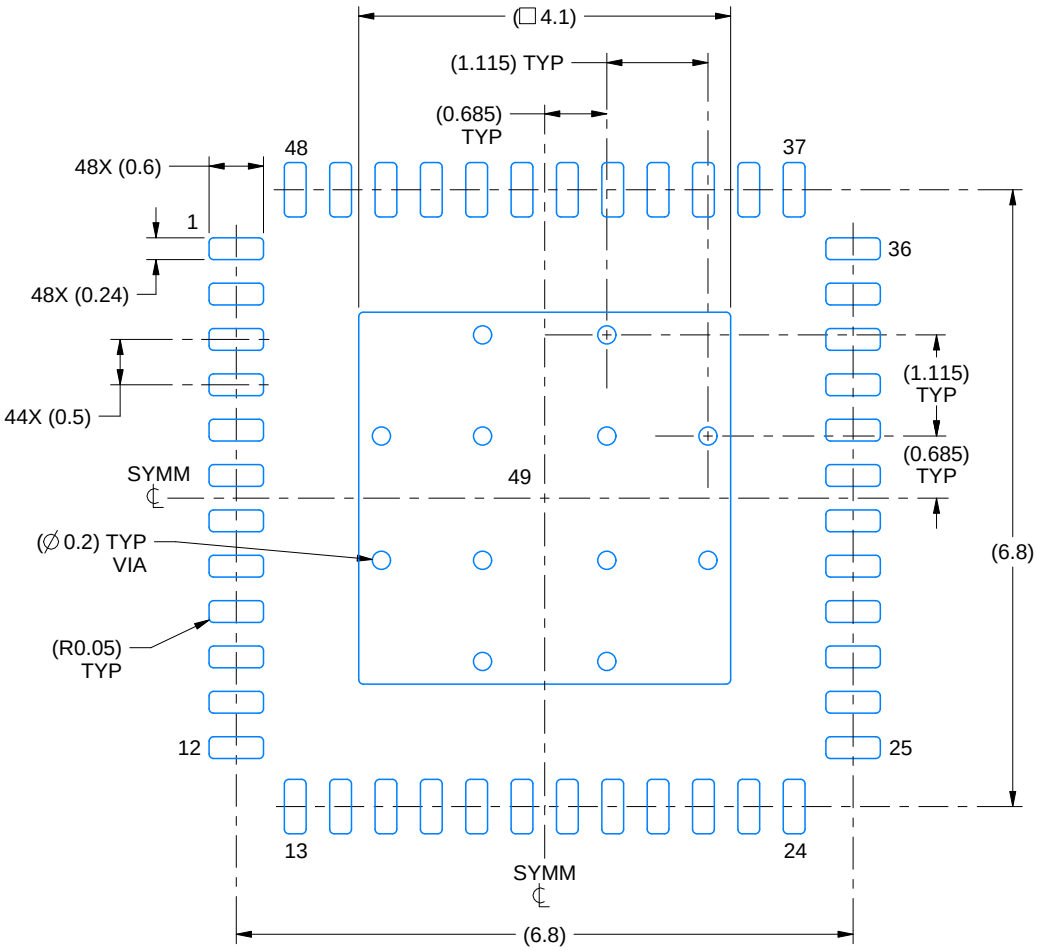

LAND PATTERN EXAMPLE
EXPOSED METAL SHOWN
SCALE:12X

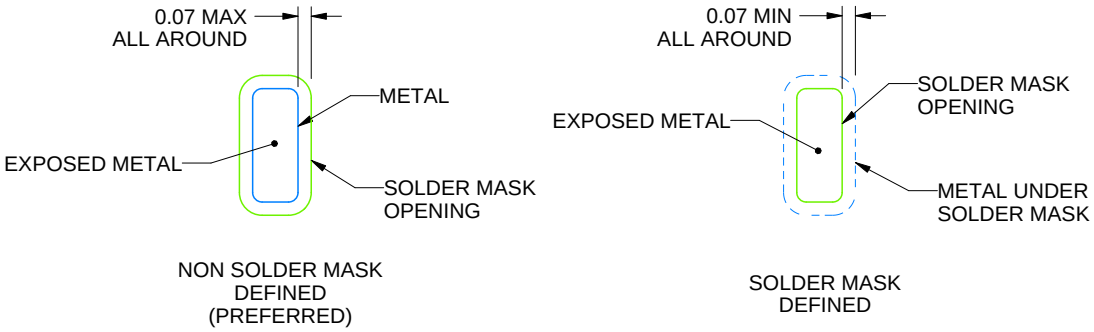

SOLDER MASK DETAILS

4218795/B 02/2017

NOTES: (continued)

4. This package is designed to be soldered to a thermal pad on the board. For more information, see Texas Instruments literature number SLUA271 (www.ti.com/lit/slua271).
5. Vias are optional depending on application, refer to device data sheet. If any vias are implemented, refer to their locations shown on this view. It is recommended that vias under paste be filled, plugged or tented.

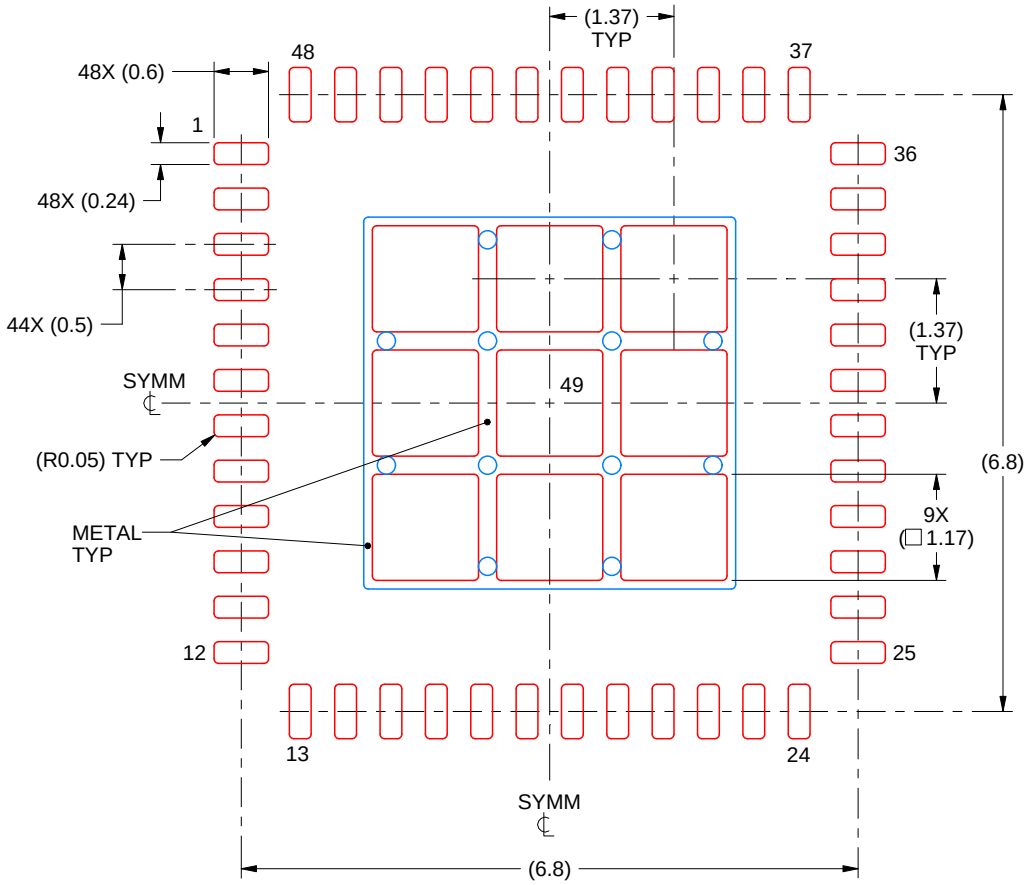

SOLDER PASTE EXAMPLE
BASED ON 0.125 mm THICK STENCIL

EXPOSED PAD 49
73% PRINTED SOLDER COVERAGE BY AREA UNDER PACKAGE
SCALE:12X

4218795/B 02/2017

NOTES: (continued)

6. Laser cutting apertures with trapezoidal walls and rounded corners may offer better paste release. IPC-7525 may have alternate design recommendations.

IMPORTANT NOTICE AND DISCLAIMER

TI PROVIDES TECHNICAL AND RELIABILITY DATA (INCLUDING DATASHEETS), DESIGN RESOURCES (INCLUDING REFERENCE DESIGNS), APPLICATION OR OTHER DESIGN ADVICE, WEB TOOLS, SAFETY INFORMATION, AND OTHER RESOURCES “AS IS” AND WITH ALL FAULTS, AND DISCLAIMS ALL WARRANTIES, EXPRESS AND IMPLIED, INCLUDING WITHOUT LIMITATION ANY IMPLIED WARRANTIES OF MERCHANTABILITY, FITNESS FOR A PARTICULAR PURPOSE OR NON-INFRINGEMENT OF THIRD PARTY INTELLECTUAL PROPERTY RIGHTS.

These resources are intended for skilled developers designing with TI products. You are solely responsible for (1) selecting the appropriate TI products for your application, (2) designing, validating and testing your application, and (3) ensuring your application meets applicable standards, and any other safety, security, or other requirements. These resources are subject to change without notice. TI grants you permission to use these resources only for development of an application that uses the TI products described in the resource. Other reproduction and display of these resources is prohibited. No license is granted to any other TI intellectual property right or to any third party intellectual property right. TI disclaims responsibility for, and you will fully indemnify TI and its representatives against, any claims, damages, costs, losses, and liabilities arising out of your use of these resources.

TI’s products are provided subject to TI’s Terms of Sale (www.ti.com/legal/termsofsale.html) or other applicable terms available either on ti.com or provided in conjunction with such TI products. TI’s provision of these resources does not expand or otherwise alter TI’s applicable warranties or warranty disclaimers for TI products.

Mailing Address: Texas Instruments, Post Office Box 655303, Dallas, Texas 75265
Copyright © 2020, Texas Instruments Incorporated