# LTC3875EUJ & LTC3874IUFD
# High Efficiency, Single-Output Synchronous Buck Converter with Very Low DCR Inductor

## DESCRIPTION

Demonstration circuit 2142A is a high efficiency, high density, 4-phase synchronous buck converter with a 4.5V to 14V input range. It can supply 120A maximum load current at a 1.0V output. This demo board incorporates the LTC3875EUJ and LTC3874IUFD controllers.

The LTC®3875 is a feature-rich dual phase synchronous buck controller with very low DCR current sensing capability, on-chip drivers and remote output voltage sensing. The LTC3874 is a compact dual phase synchronous buck phase extender with very low DCR current sensing capability, on-chip drivers and immediate response to master IC's fault.

This board is setup with 0.32mΩ DCR inductor. The temperature compensation function guarantees accurate current limit over a wide temperature range with DCR sensing. The DC2142 can provide high efficiency, high power density and compact solutions for telecom and datacom systems, industrial and medical instruments, DC power distribution systems and computer systems. The LTC3875 is available in a 40-pin 6mm × 6mm QFN package. The LTC3874 is available in a 28-lead (4mm × 5mm) QFN Package.

To shut down the converter, set the RUN pin voltage below 1.4V (SW1: OFF). Use the JP1 jumper to select burst mode, pulse skipping mode or forced continuous mode operation at light load. Switching frequency is preset at about 400kHz, and it can be easily modified from 250kHz to 770kHz. An on-board dynamic circuit is also available for transient test. The LTC3875 and LTC3874 data sheets give a complete description of these parts, and must be read in conjunction with this DC2142A quick start guide

**Design files for this circuit board are available at http://www.linear.com/demo/DC2142A**

LT, LTC, LTM, Linear Technology and the Linear logo are registered trademarks of Linear Technology Corporation. All other trademarks are the property of their respective owners.

## PERFORMANCE SUMMARY

**Specifications are at $T_A$ = 25°C**

| PARAMETER | CONDITIONS | VALUE |
|---|---|---|
| Input Voltage Range | | 4.5V to 14V |
| Output Voltage, $V_{OUT}$ | $V_{IN}$ = 4.5V to 14V, $I_{OUT1}$ = 0A to 120A | 1.0V ±2% |
| Maximum Output Current, $I_{OUT}$ | $V_{IN}$ = 4.5V to 14V, $V_{OUT1}$ = 1.0V | 120A |
| Typical Efficiency, $V_{OUT}$ | $V_{IN}$ = 12V, $V_{OUT1}$ = 1.0 V, $I_{OUT1}$ = 120A | 87.4% |
| Typical Switching Frequency | | 400kHz |

## QUICK START PROCEDURE

Demonstration circuit 2142A is easy to set up to evaluate the performance of the LTC3875EUJ and LTC3874IUFD. Refer to Figure 1 for the proper measurement equipment setup and follow the procedure below:

1. With power off, connect the input power supply to $V_{IN}$ (4.5V to 14V) and GND (input return).
2. Connect the 1.0V output load between $V_{OUT}$ and GND (Initial load: no-load).
3. Connect the DVMs to the input and outputs. Set default jumper position: JP1: CCM; SW1: ON.
4. Turn on the input power supply and check for the proper output voltages. $V_{OUT}$ should be 1.0V ±2%.
5. Once the proper output voltages are established, adjust the loads within the operating range and observe the output voltage regulation, ripple voltage and other parameters.

Note: When measuring the output or input voltage ripple, do not use the long ground lead on the oscilloscope probe. See Figure 2 for the proper scope probe technique. Short, stiff leads need to be soldered to the (+) and (–) terminals of an output capacitor. The probe's ground ring needs to touch the (–) lead and the probe tip needs to touch the (+) lead.

# QUICK START PROCEDURE

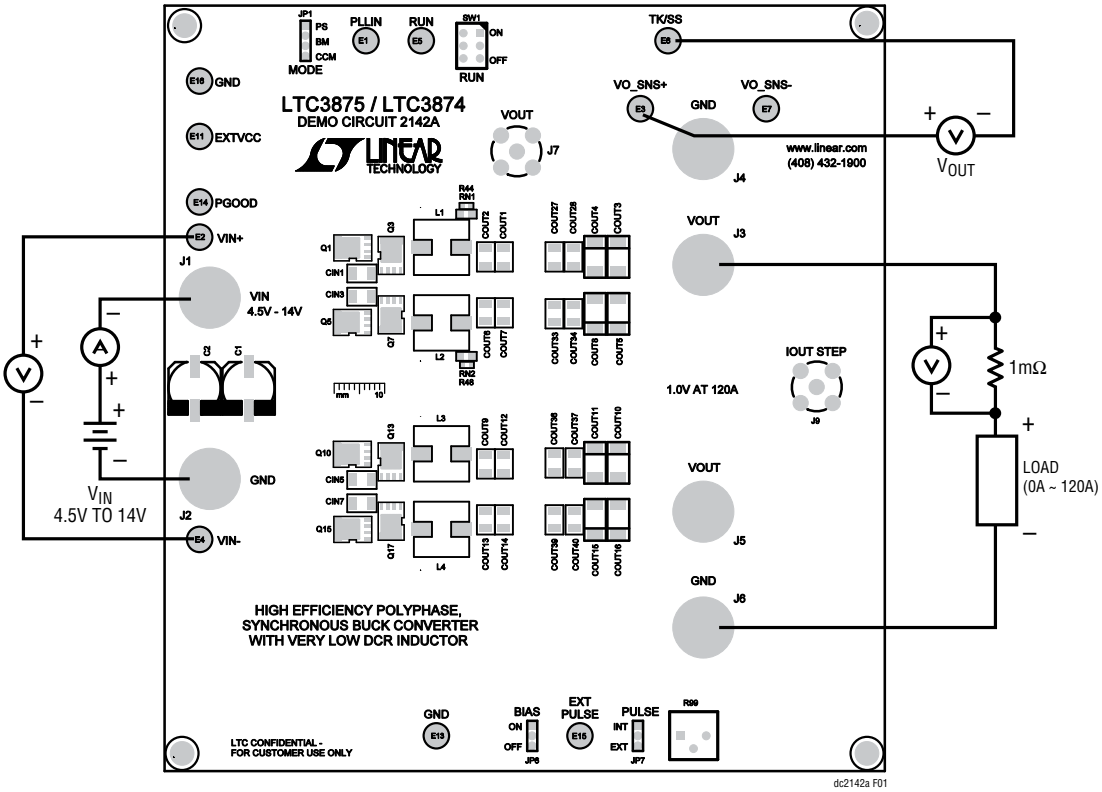


**Figure 1. Proper Measurement Equipment Setup**

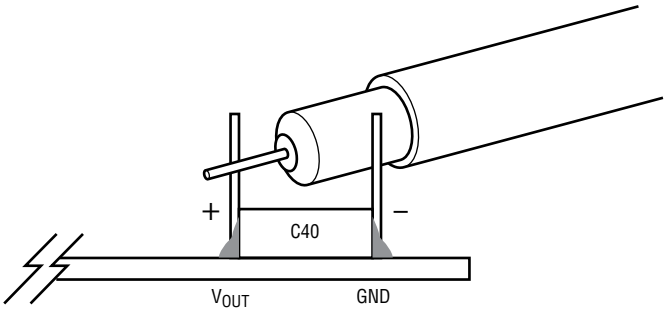


**Figure 2. Measuring Output Voltage Ripple**

## QUICK START PROCEDURE

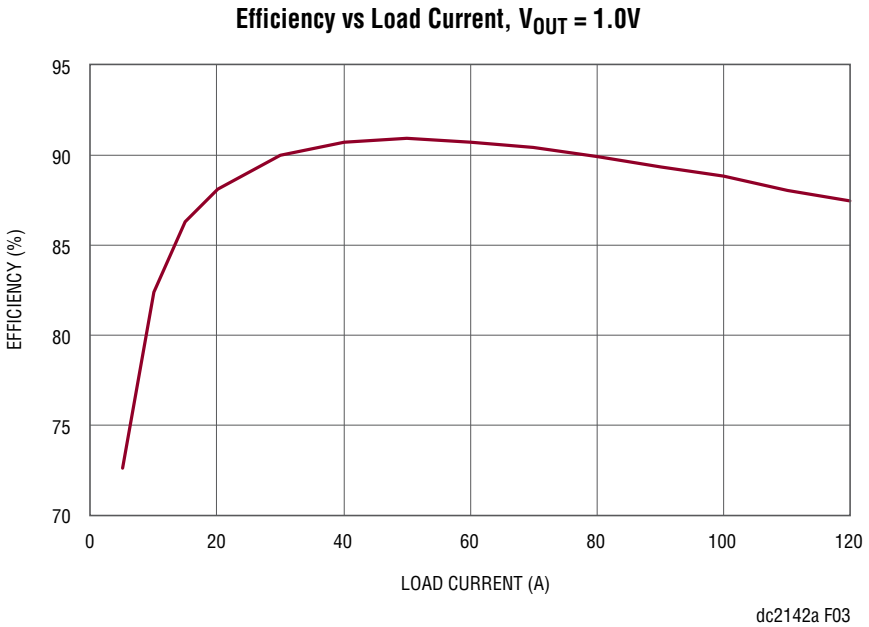


Figure 3. Efficiency vs Load Current at $V_{IN}$ = 12V, $V_{OUT}$ = 1.0V, $f_{SW}$ = 400kHz

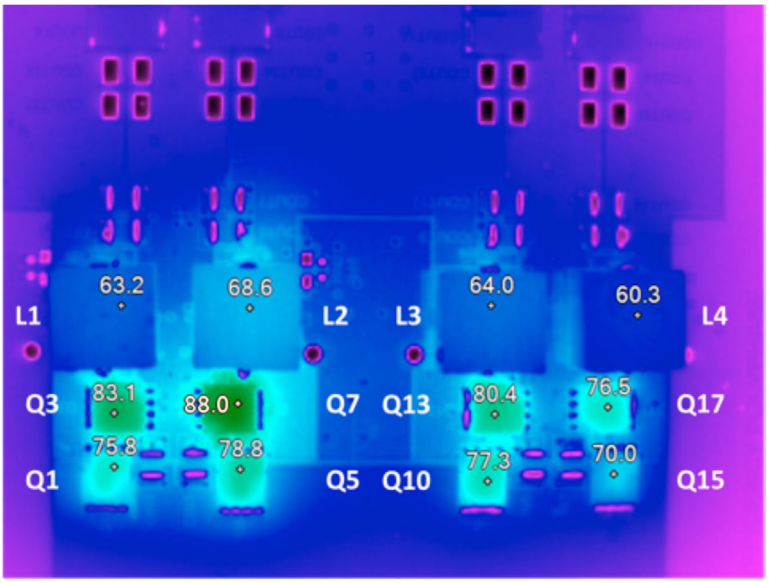


Figure 4. Thermal Performance at $V_{IN}$ = 12V, $V_{OUT}$ = 1.0V, $I_{OUT}$ = 120A, 200PFM Forced Air Flow

## QUICK START PROCEDURE

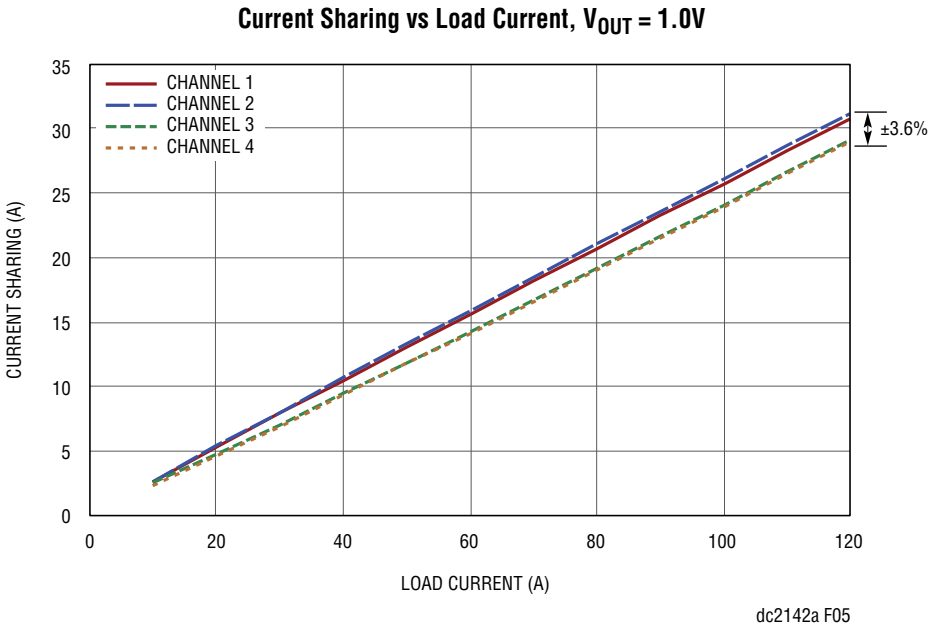


**Figure 5. Current Sharing vs Load Current at $V_{IN}$ = 12V, $V_{OUT}$ = 1.0V, $f_{SW}$ = 400kHz**

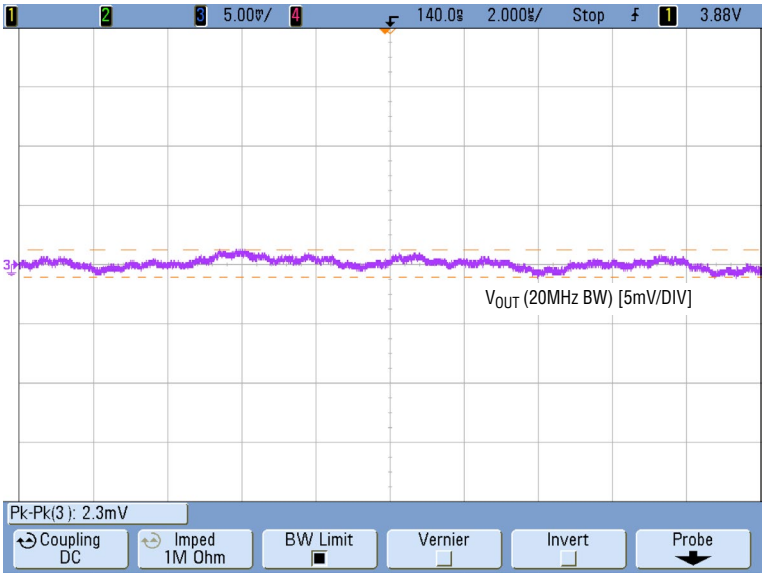


**Figure 6. Output Voltage Ripple at $V_{IN}$ = 12V, $V_{OUT}$ = 1.0V, $I_{OUT}$ = 120A**

## QUICK START PROCEDURE

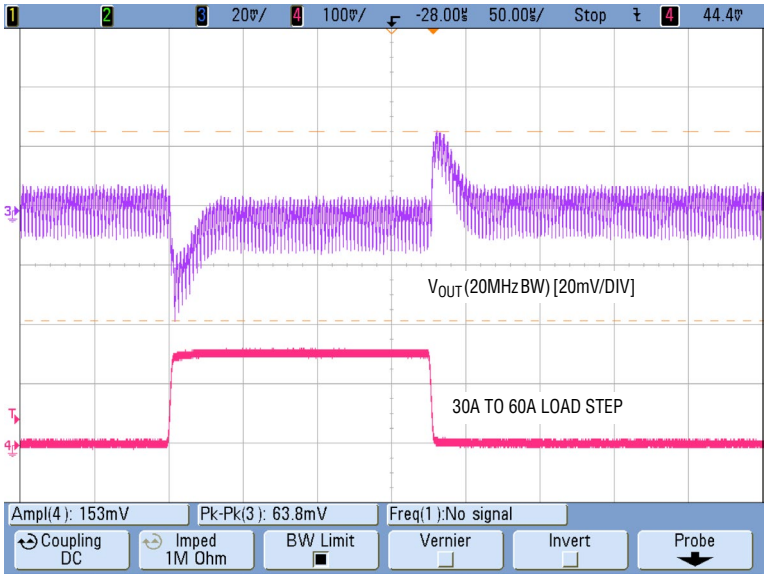


**Figure 7. Transient Performance at $V_{IN}$ = 12V, $V_{OUT}$ = 1.0V, $I_{OUT}$ = 30A ~ 60A**

## PARTS LIST

| ITEM | QTY | REFERENCE | PART DESCRIPTION | MANUFACTURER/PART NUMBER |
|---|---|---|---|---|
| **Required Circuit Components** | | | | |
| 1 | 8 | CIN1, CIN2, CIN3, CIN4, CIN5, CIN6, CIN7, CIN8 | CAP, 1210, 10µF, 20%, 35V X5R | AVX 1210DD106MAT2A |
| 2 | 14 | COUT1, COUT2, COUT6, COUT7, COUT9, COUT12, COUT13, COUT14, COUT19, COUT20, COUT24, COUT25, C39, C40 | CAP, 1210, 100µF, 20%, 6.3V X5R | TDK C3225X5R0J107M |
| 3 | 12 | COUT3, COUT4, COUT5, COUT8, COUT10, COUT11, COUT15, COUT16, COUT17,COUT18, COUT22, COUT23 | CAP, 7343, 330µF, 20%, 6.3V POSCAP | SANYO 6TPF330M9L |
| 4 | 3 | C3, C25, C29 | CAP, 0603, 1µF, 20%, 25V X5R | AVX 06033D105KAT2A |
| 5 | 2 | C1, C2 | CAP, 270µF, 20%, 16V OSCON | PANASONIC 16SVPC270M |
| 6 | 4 | C4, C30, C31, C46 | CAP, 0603, 4.7µF, 10%, 10V X5R | AVX 0603ZD475KAT2A |
| 7 | 1 | C5 | CAP, 0603, 10nF, 10%, 16V X7R | AVX 0603YC103KAT2A |
| 8 | 5 | C7, C8, C18, C32, C36, | CAP, 0603, 0.1µF, 10%, 25V X5R | AVX 06033C104KAT2A |
| 9 | 6 | C10, C12, C20, C24, C33, C35 | CAP, 0603, 220nF, 10%, 25V X7R | TDK C1608X7R1E224K |
| 10 | 1 | C15 | CAP, 0603, 220pF, 5%, 50V C0G | AVX 06035A221JAT2A |
| 11 | 1 | C16 | CAP, 0603, 2.2nF, 5%, 50V C0G | MURATA GRM1885C1H222JA01D |
| 12 | 1 | C34 | CAP, 0603, 100pF, 10%, 16V X7R | AVX 0603YC101KAT2A |
| 13 | 1 | D1, D2, D3, D4 | DIODE, SCHOTTKY 30V, 100mA | CENTRAL SEMI CMDSH-3-TR |
| 14 | 4 | L1, L2, L3, L4 | IND, 0.25µH | WÜRTH ELEKTRONIK 744301025 |

## PARTS LIST

| ITEM | QTY | REFERENCE | PART DESCRIPTION | MANUFACTURER/PART NUMBER |
|---|---|---|---|---|
| 15 | 4 | Q1, Q5, Q10, Q15 | XSTR, POWER MOSFET | INFINEON BSC050NE2LS |
| 16 | 4 | Q3, Q7, Q13, Q17 | XSTR, POWER MOSFET | INFINEON BSC010NE2LSI |
| 17 | 1 | Q19 | XSTR, N-CHANNEL DMOS FET | FAIRCHILD 2N7002A |
| 18 | 2 | Q20, Q21 | XSTR, MOSFET, N-CHANNEL 30V | VISHAY SUD50N04-8M8P-4GE3 |
| 19 | 1 | R1 | RES, 0603, 20kΩ, 5%, 1/10W | VISHAY CRCW060320K0JNEA |
| 20 | 1 | R2 | RES, 0603, 3.01kΩ, 1%, 1/10W | VISHAY CRCW06033K01FKEA |
| 21 | 1 | R3 | RES, 0603, 1kΩ, 5%, 1/10W | VISHAY CRCW06031K00JNEA |
| 22 | 3 | R4, R51, R85 | RES, 0603, 2.2Ω, 5%, 1/10W | VISHAY CRCW06032R20JNEA |
| 23 | 2 | R6, R14 | RES, 0603, 10Ω, 1%, 1/10W | VISHAY CRCW060310R0FKEA |
| 24 | 4 | R8, R28, R58, R66 | RES, 0603, 715Ω, 1%, 1/10W | VISHAY CRCW0603715RFKEA |
| 25 | 2 | R9, R27 | RES, 0603, 3.57kΩ, 1%, 1/10W | VISHAY CRCW06033K57FKEA |
| 26 | 13 | R10, R13, R24, R50, R53, R54, R56, R57, R59, R60, R61, R65, R67 | RES, 0603, 0Ω, JUMPER | VISHAY CRCW06030000Z0EA |
| 27 | 1 | R12 | RES, 0603, 13.3kΩ, 1%, 1/10W | VISHAY CRCW060313K3FKEA |
| 28 | 1 | R17 | RES, 0603, 20kΩ, 1%, 1/10W | VISHAY CRCW060320K0FKEA |
| 29 | 1 | R21 | RES, 0603, 4.02kΩ, 1%, 1/10W | VISHAY CRCW06034K02FKEA |
| 30 | 3 | R33, R42, R69 | RES, 0603, 100kΩ, 1%, 1/10W | VISHAY CRCW0603100KFKEA |
| 31 | 1 | R45 | RES, 0603, 5kΩ, 5%, 1/10W | VISHAY CRCW06035K00JNED |
| 32 | 2 | R46, R47 | RES, 0603, 10kΩ, 1%, 1/10W | VISHAY CRCW060310K0FKEA |
| 33 | 1 | R63 | RES, 0603, 75kΩ 5% 1/10W | VISHAY CRCW060375K0JNEA |
| 34 | 1 | R102 | RES, 0603, 237kΩ, 1%, 1/10W | VISHAY CRCW0603237KFKEA |
| 35 | 1 | SW1 | SWITCH, SUBMINATURE SLIDE | C&K JS202011CQN |
| 36 | 1 | U1 | IC, DUAL, 2-PHASE, SYNCHRONOUS REGULATORS | LINEAR TECH. LTC3875EUJ#PBF-ES |
| 37 | 1 | U2 | IC, POLYPHASE STEP-DOWN SYNCHRONOUS SLAVE CONTROLLER | LINEAR TECH. LTC3874IUFD#PBF |
| **Additional Demo Board Circuit Components** | | | | |
| 1 | 0 | COUT27, COUT28, COUT29, COUT30, COUT31, COUT32, COUT33, COUT34, COUT35, COUT36, COUT37, COUT38, COUT39, COUT40, COUT41, COUT42, COUT43, COUT44, COUT45, COUT46 | CAP, 1210 OPTION | OPTION |
| 2 | 0 | C9, C11, C26, C27, C28 | CAP, 0603 OPTION | OPTION |
| 3 | 4 | C43, C44, C47, COUT21, | CAP, 0603, 1µF, 20%, 25V X5R | AVX 06033D105KAT2A |
| 4 | 1 | C37 | CAP, 0805, 10µF, 10%, 16V X5R | MURATA GRM21BR61C106KE15L |
| 5 | 1 | C38 | CAP, 0805, 22µF, 10%, 10V X5R | TDK C2012X5R1A226K |
| 6 | 1 | C42 | CAP, 0603, 150pF, 5%, 50V NPO | AVX 06035A151JAT2A |
| 7 | 2 | C41, C45 | CAP, 0603, 0.1µF, 10%, 25V X5R | AVX 06033C104KAT2A |
| 8 | 1 | C48 | CAP, 0603, 22pF, 2%, 50V C0G | MURATA GRM1885C1H220GA01D |
| 9 | 1 | D5 | DIODE, SCHOTTKY 30V, 100mA | CENTRAL SEMI CMDSH-3-TR |
| 10 | 1 | L5 | IND, 3.3µH | WÜRTH ELEKTRONIK 744043003 |

## PARTS LIST

| ITEM | QTY | REFERENCE | PART DESCRIPTION | MANUFACTURER/PART NUMBER |
|---|---|---|---|---|
| 11 | 0 | Q2, Q4, Q6, Q8, Q11, Q14, Q16, Q18 | XSTR, POWER MOSFET OPTION | OPTION |
| 12 | 2 | R88, R92 | RES, 0603, 20kΩ, 5% 1/10W | VISHAY CRCW060320K0JNEA |
| 13 | 2 | R68, R87 | RES, 0603, 0Ω, JUMPER | VISHAY CRCW06030000Z0EA |
| 14 | 0 | RN1, RN2 | THERMISTOR, OPTION | OPTION |
| 15 | 0 | R5, R7, R11, R15, R16, R18, R19, R34, R35, R37, R39, R40, R41, R43, R44, R48,R49, R52, R55, R62, R64, R70, R76, R101, R104, R105 | RES, 0603 OPTION | OPTION |
| 16 | 2 | R77, R94 | RES, 0603, 10kΩ, 1% 1/10W | VISHAY CRCW060310K0FKEA |
| 17 | 1 | R80 | RES, 0603, 187kΩ, 1% 1/10W | VISHAY CRCW0603187KFKEA |
| 18 | 1 | R83 | RES, 0603, 23.2kΩ, 1% 1/10W | VISHAY CRCW060323K2FKEA |
| 19 | 1 | R89 | RES, 0603, 3.3Ω, 1%, 1/10W | VISHAY CRCW06033R30FNEA |
| 20 | 1 | R90 | RES, 0603, 154kΩ, 1% 1/10W | VISHAY CRCW0603154KFKEA |
| 21 | 1 | R91 | RES, 0603, 1MΩ, 5% 1/10W | VISHAY CRCW06031M00JNEA |
| 22 | 1 | R93 | RES, 0603, 681kΩ, 1% 1/10W | VISHAY CRCW0603681KFEA |
| 23 | 2 | R95, R100 | RES, 0603, 301Ω, 1% 1/10W | VISHAY CRCW0603301RFKEA |
| 24 | 1 | R96 | RES, 0603, 82.5Ω, 5% 1/10W | VISHAY CRCW060382R5FKEA |
| 25 | 2 | R97, R98 | RES, 2512, 0.01Ω, 1% 1W | VISHAY WSL2512R0100FEA |
| 26 | 1 | R99 | RES, VARIABLE 5k | BOURNS 3386P-1-502-LF |
| 27 | 1 | UD1 | IC, OSCILLATOR WITH SPREAD SPECTRUM MODULATION | LINEAR TECH. LTC6908S6-1#PBF |
| 28 | 1 | U3 | IC, 17V, 1A, SYNCHRONOUS STEP-DOWN REGULATOR | LINEAR TECH. LTC3621EDCB-2#PBF |
| 29 | 1 | U4 | IC, VOLTAGE-CONTROLLED PULSE WIDTH MODULATOR | LINEAR TECH. LTC6992IS6-1 |
| 30 | 1 | U5 | IC, SINGLE OP AMP | LINEAR TECH. LT1803IS5 |
| **Hardware: For Demo Board Only** | | | | |
| 1 | 12 | E1, E2, E3, E4, E5, E6, E7, E11, E13, E14, E15, E16 | TURRET | MILL MAX 2501-2-00-80-00-00-07-0 |
| 2 | 1 | JP1 | HEADER, 4-PIN | WURTH 620 004 111 21 |
| 3 | 2 | JP6, JP7 | HEADER, SINGLE ROW 3-PIN | WURTH 620 003 111 21 |
| 4 | 6 | J1, J2, J3, J4, J5, J6 | STUD, TEST PIN | PEM KFH-032-10 |
| 5 | 2 | J7, J9 | CONN, BNC, 5-PINS | CONNEX 112404 |
| 6 | 6 | | LUG RING, #10 | KEYSTONE 8205 |
| 7 | 4 | MH1, MH2, MH3, MH4 | STANDOFF, SNAP ON | KEYSTONE 8834 |
| 8 | 12 | | NUT, BRASS 10-32 | ANY #10-32 |
| 9 | 6 | | WASHER, #10 TIN PLATED BRASS | ANY #10 EXT BZ TN |
| 10 | 3 | JP1, JP6, JP7 | SHUNT | WURTH 608 002 134 21 |

## SCHEMATIC DIAGRAM

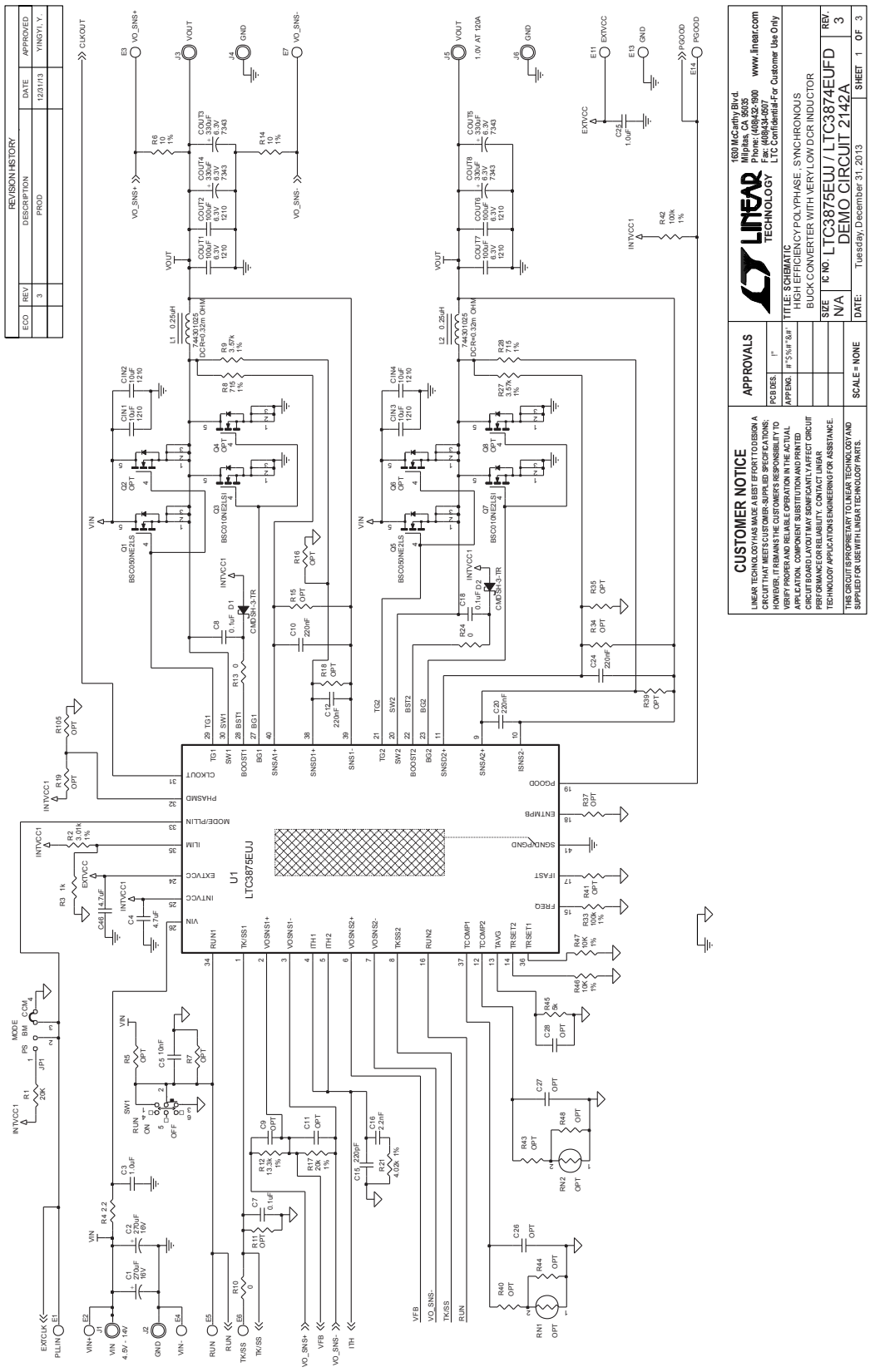

## SCHEMATIC DIAGRAM

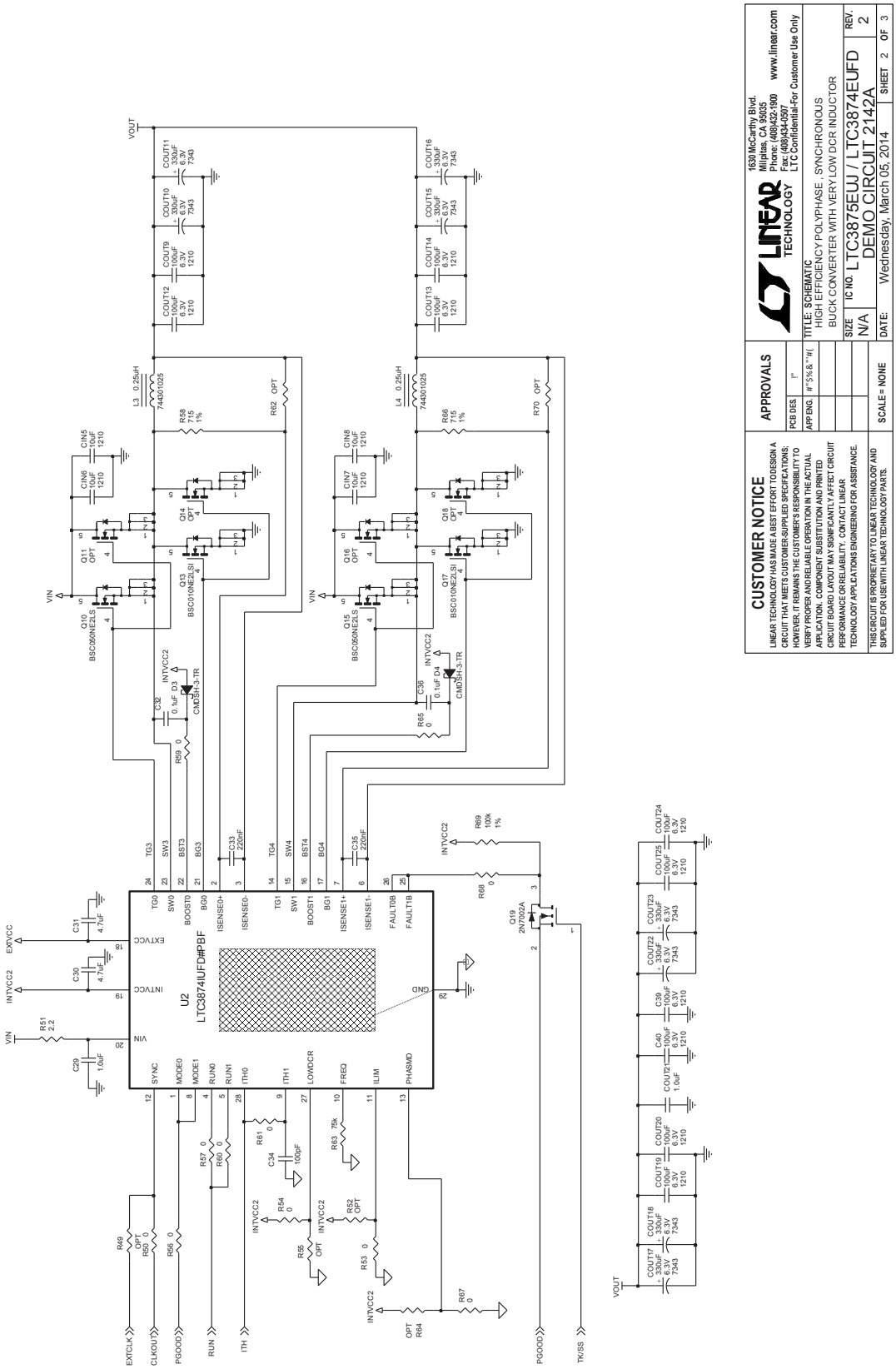

## SCHEMATIC DIAGRAM

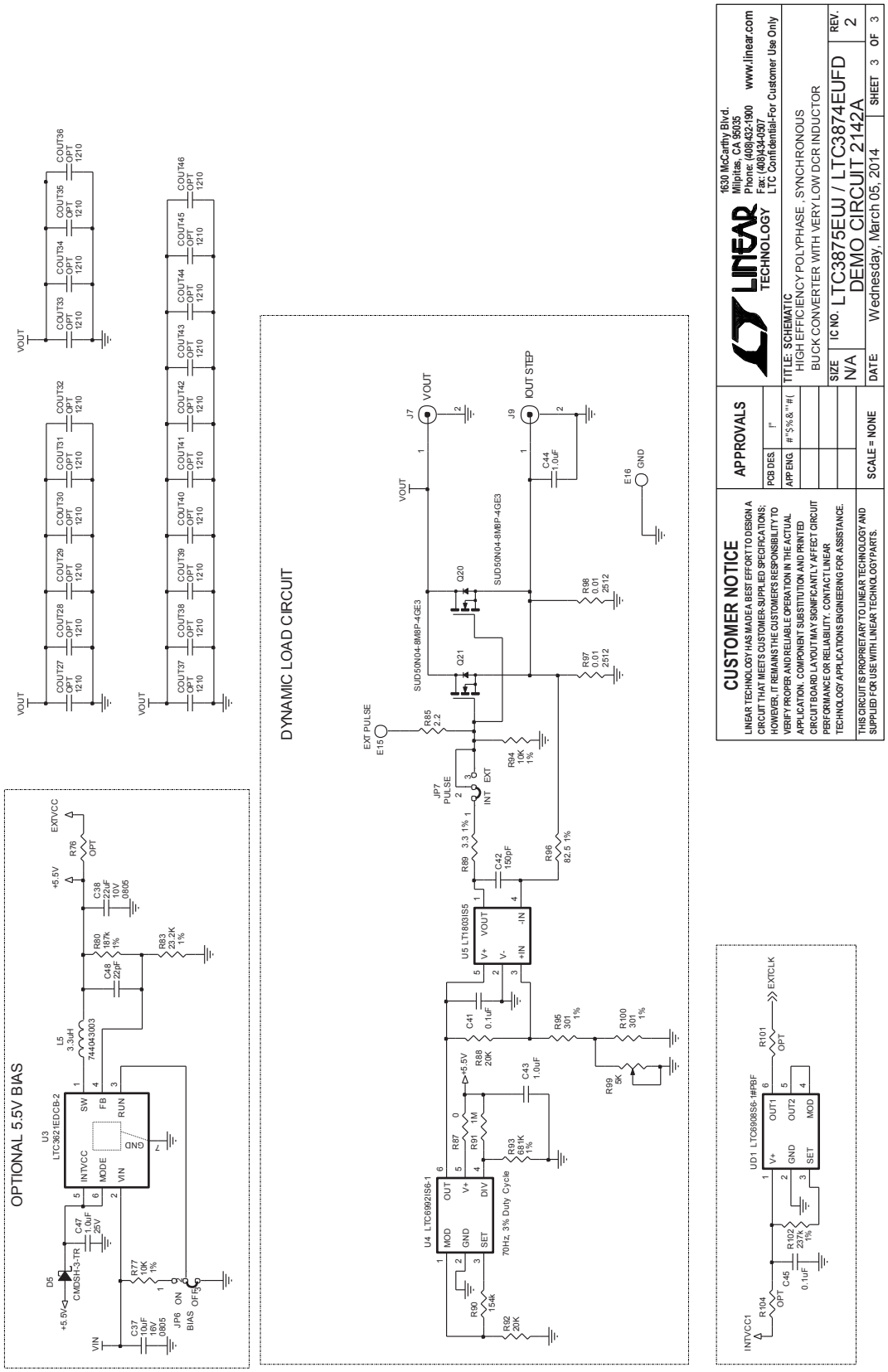




Information furnished by Linear Technology Corporation is believed to be accurate and reliable. However, no responsibility is assumed for its use. Linear Technology Corporation makes no representation that the interconnection of its circuits as described herein will not infringe on existing patent rights.

DEMONSTRATION BOARD IMPORTANT NOTICE

Linear Technology Corporation (LTC) provides the enclosed product(s) under the following **AS IS** conditions:

This demonstration board (DEMO BOARD) kit being sold or provided by Linear Technology is intended for use for **ENGINEERING DEVELOPMENT OR EVALUATION PURPOSES ONLY** and is not provided by LTC for commercial use. As such, the DEMO BOARD herein may not be complete in terms of required design-, marketing-, and/or manufacturing-related protective considerations, including but not limited to product safety measures typically found in finished commercial goods. As a prototype, this product does not fall within the scope of the European Union directive on electromagnetic compatibility and therefore may or may not meet the technical requirements of the directive, or other regulations.

If this evaluation kit does not meet the specifications recited in the DEMO BOARD manual the kit may be returned within 30 days from the date of delivery for a full refund. THE FOREGOING WARRANTY IS THE EXCLUSIVE WARRANTY MADE BY THE SELLER TO BUYER AND IS IN LIEU OF ALL OTHER WARRANTIES, EXPRESSED, IMPLIED, OR STATUTORY, INCLUDING ANY WARRANTY OF MERCHANTABILITY OR FITNESS FOR ANY PARTICULAR PURPOSE. EXCEPT TO THE EXTENT OF THIS INDEMNITY, NEITHER PARTY SHALL BE LIABLE TO THE OTHER FOR ANY INDIRECT, SPECIAL, INCIDENTAL, OR CONSEQUENTIAL DAMAGES.

The user assumes all responsibility and liability for proper and safe handling of the goods. Further, the user releases LTC from all claims arising from the handling or use of the goods. Due to the open construction of the product, it is the user's responsibility to take any and all appropriate precautions with regard to electrostatic discharge. Also be aware that the products herein may not be regulatory compliant or agency certified (FCC, UL, CE, etc.).

No License is granted under any patent right or other intellectual property whatsoever. **LTC assumes no liability for applications assistance, customer product design, software performance, or infringement of patents or any other intellectual property rights of any kind.**

LTC currently services a variety of customers for products around the world, and therefore this transaction **is not exclusive**.

**Please read the DEMO BOARD manual prior to handling the product**. Persons handling this product must have electronics training and observe good laboratory practice standards. **Common sense is encouraged**.

This notice contains important safety information about temperatures and voltages. For further safety concerns, please contact a LTC application engineer.

Mailing Address:

Linear Technology

1630 McCarthy Blvd.

Milpitas, CA 95035

Copyright © 2004, Linear Technology Corporation



© LINEAR TECHNOLOGY CORPORATION 2014