AVR128DA48 Curiosity Nano

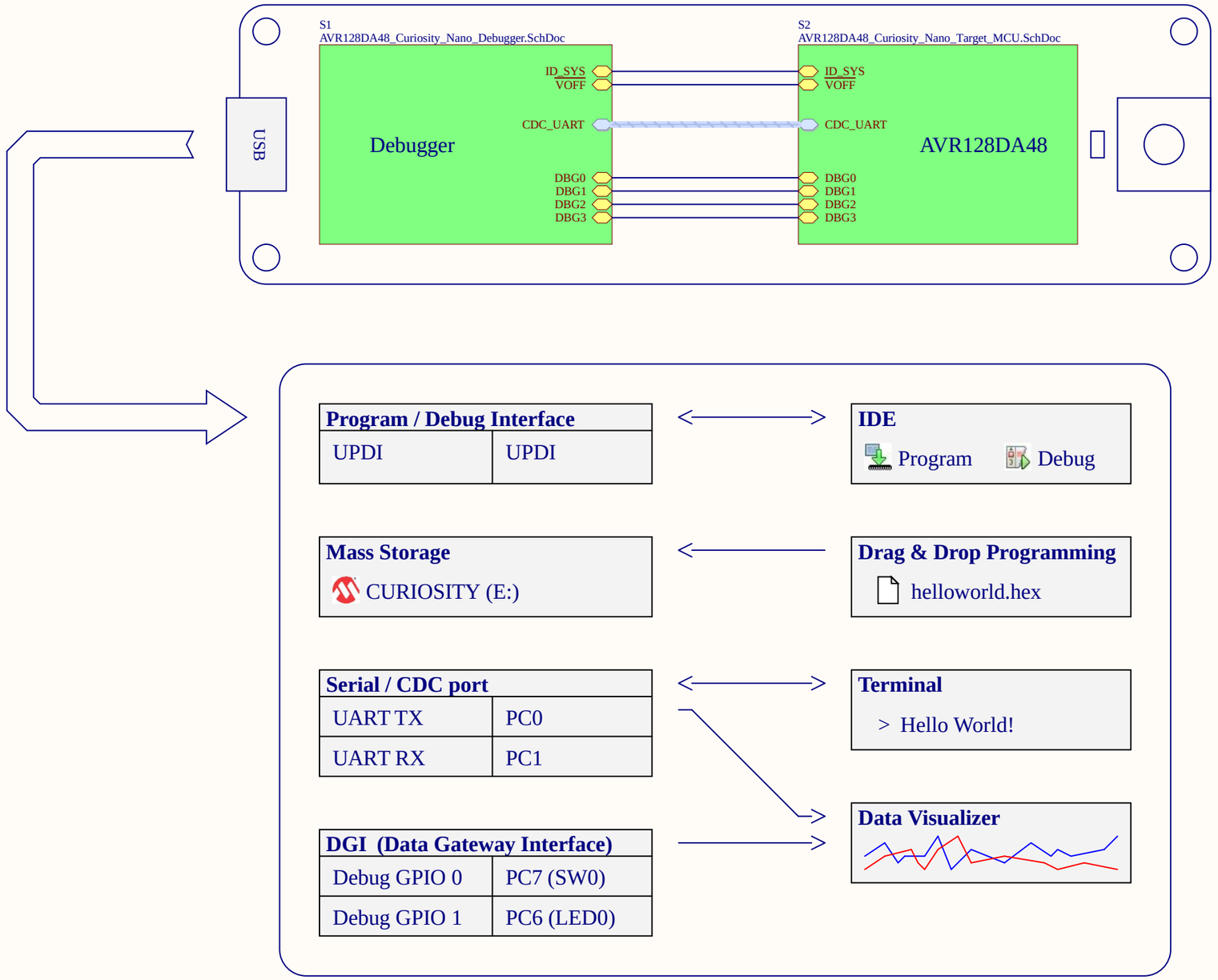

On-Board Peripherals		
LED0	PC6	Active Low
SW0	PC7	Active Low

TESTDOC1
A12-1314

TEST1
A11-0450

FW1
A11-0406

PCBADOC1
A12-1394

PCB1
A08-3002

LABEL1
Product number/revision
Serial number
Label PCBA

S3
AVR128DA48_Curiosity_Nano_Revision_History.SchDoc

Drawn By: PB		MICROCHIP	
Engineer: AH, TF			
Project Title: *AVR128DA48 Curiosity Nano*			Designed with Altium — Altium.com
Sheet Title: Top Level			
Size A3	PCB Assembly Number: A09-3280	PCBA Revision: 3	Date: 2/20/2020
	PCB Number: A08-3002	PCB Revision: 3	Page: 1 of 4
File: AVR128DA48_Curiosity_Nano_TopLevel.SchDoc			

AVR128DA48

	AVR128DA48	
Debugger	*Name*	*Pin*
CDC TX	UART1 RX	PC1
CDC RX	UART1 TX	PC0
DBG0	UPDI	UPDI
DBG1	GPIO1	PC6
DBG2	GPIO0	PC7
DBG3	RESET	PF6
VTG	1.8V - 5.5V	

DEBUGGER CONNECTIONS

CDC_UART — UART — RX, TX

DBG0, DBG3, DBG1, DBG2, VOFF, ID_SYS

NOTE on UART/CDC:

RX/TX on the header denotes the input/output direction of the signal respective to it's source.

CDC TX is output from the DEBUGGER.
CDC RX is input to the DEBUGGER.
TX is output from the TARGET device.
RX is input to the TARGET device.

C200 100n: GND — VCC_TARGET

U200 AVR128DA48 TQFP

1	PA5	PF2	36
2	PA6	XTAL32K2/PF1	35
3	PA7	XTAL32K1/PF0	34
4	PB0	PE3	33
5	PB1	PE2	32
6	PB2	PE1	31
7	PB3	PE0	30
8	PB4	GND	29
9	PB5	AVDD	28
10	PC0	PD7	27
11	PC1	PD6	26
12	PC2	PD5	25

48	PA4	PC3	13
47	PA3	VDD	14
46	PA2	GND	15
45	PA1	PC4	16
44	PA0	PC5	17
43	GND	PC6	18
42	VDD	PC7	19
41	UPDI	PD0	20
40	PF6	PD1	21
39	PF5	PD2	22
38	PF4	PD3	23
37	PF3	PD4	24

PA4_SPI0_MOSI, PA3, PA2, PA1_UART0_RX, PA0_UART0_TX, GND, VDD, UPDI, PF6_RESET, PF5_UART2_RX, PF4_UART2_TX, PF3

PA5_SPI0_MISO, PA6_SPI0_SCK, PA7_SPI0_SS, PB0_UART3_TX, PB1_UART3_RX, PB2, PB3, PB4, PB5, PC0_UART1_TX, PC1_UART1_RX, PC2_I2C0_SDA

PF2, PF1_TOSC2, PF0_TOSC1, PE3, PE2, PE1, PE0, GND, AVDD, PD7_AIN7, PD6_AIN6, PD5_AIN5

PC3_I2C0_SCL, PC4, PC5, PC6_LED0_GPIO1, PC7_SW0_GPIO0, PD0_AIN0_WO0, PD1_AIN1_WO1, PD2_AIN2_WO2, PD3_AIN3, PD4_AIN4

GND — C201 100n — AVDD

L200 BLM18PG471SN1: GND — VCC_TARGET

C202 100n: VCC_TARGET — GND

PC7_SW0_GPIO0, PC6_LED0_GPIO1, PF0_TOSC1, PF1_TOSC2

USER BUTTON

R202 1k; SW200 TS604VM1-035CR; GND

USER LED

VCC_TARGET; D200 YELLOW LED SML-D12Y1WT86; R203 1k

TARGET BULK

VCC_EDGE; C205 2.2uF; GND

32kHz Crystal

J210 XIN; XC200 32.768 kHz; J209; XOUT J211

C203 12p; C204 12p; GND

Crystal datasheet:
Ccrystal = 9pF
max ESR = 70kOhm
Accuracy ±20ppm

AVR128DA48 datasheet:
Cxin = 4.1pF
Cxout = 6.0pF
Cl ≈ 1/((1/4.1pF)+ (1/6.0pF)) ≈ 2.44pF
Maximum Load = 12.5pF
Maximum ESR = 80kOhm

Estimated Cpcb = 0.5pF

Estimated load
C = 2 (Ccrystal- Cpara - Cpcb)
C = 2 (9pF - 2.44pF - 0.5pF)
C = 12.12pF

Selected in design after verification
C= 12pF/12pF

RESET Pull

VCC_TARGET; R200 47k; J202 PF6_RESET; J204 UPDI

VBUS; DBG2, DBG1, CDC_TX, CDC_RX, ID_SYS, VOFF, DBG3, DBG0

J200 DEBUGGER

NC	1	RESERVED	VBUS	56	
	2	ID	VOFF	55	
PC0_UART1_TX	3	CDC RX	DBG3	54	J202 PF6_RESET
PC1_UART1_RX	4	CDC TX	DBG0	53	J204 UPDI
PC6_LED0_GPIO1	5	DBG1	GND	52	GND
PC7_SW0_GPIO0	6	DBG2	VCC	51	VCC_EDGE
PA0_UART0_TX	7	0 TX	ADC 7	50	PD7_AIN7
PA1_UART0_RX	8	1 RX	ADC 6	49	PD6_AIN6
PC2_I2C0_SDA	9	2 SDA	ADC 5	48	PD2_AIN2_WO2
PC3_I2C0_SCL	10	3 SCL	PWM 4	47	PD1_AIN1_WO1
PA4_SPI0_MOSI	11	4 MOSI	PWM 3	46	PD0_AIN0_WO0
PA5_SPI0_MISO	12	5 MISO	ADC 2	45	PD5_AIN5
PA6_SPI0_SCK	13	6 SCK	ADC 1	44	PD4_AIN4
PA7_SPI0_SS	14	7 SS	ADC 0	43	PD3_AIN3
GND	15	GND	GND	42	GND
PF4_UART2_TX	16	0 (TX)	7	41	PE3
PF5_UART2_RX	17	1 (RX)	6	40	PE2
PF2	18	2	5	39	PE1
PF3	19	3	4	38	PE0
PB0_UART3_TX	20	0	7	37	PA3
PB1_UART3_RX	21	1	6	36	PA2
PB2	22	2	5	35	PB5
PB3	23	3	4	34	PB4
	24			33	
GND	25	GND	GND	32	GND
PC0_UART1_TX	26	0	7	31	PC5
PC1_UART1_RX	27	1	6	30	PF1 J207 PF1_TOSC2
PC6_LED0_GPIO1	28	2	5	29	PF0 J208 PF0_TOSC1
PC7_SW0_GPIO0		3	4		

TARGET

CNANO56-pin edge connector

NOTE on I2C:

No pull-ups on board. Pull-ups should be mounted close to slave device(s).

Drawn By:	PB
Engineer:	AH, TF
Project Title	*AVR128DA48 Curiosity Nano*
Sheet Title	Target MCU
Size	A3
PCB Assembly Number:	A09-3280
PCBA Revision:	3
PCB Number:	A08-3002
PCB Revision:	3
File:	AVR128DA48_Curiosity_Nano_Target_MCU.SchDoc
Date:	2/20/2020
Page:	2 of 4

MICROCHIP

Designed with Altium — Altium.com

TARGET ADJUSTABLE REGULATOR

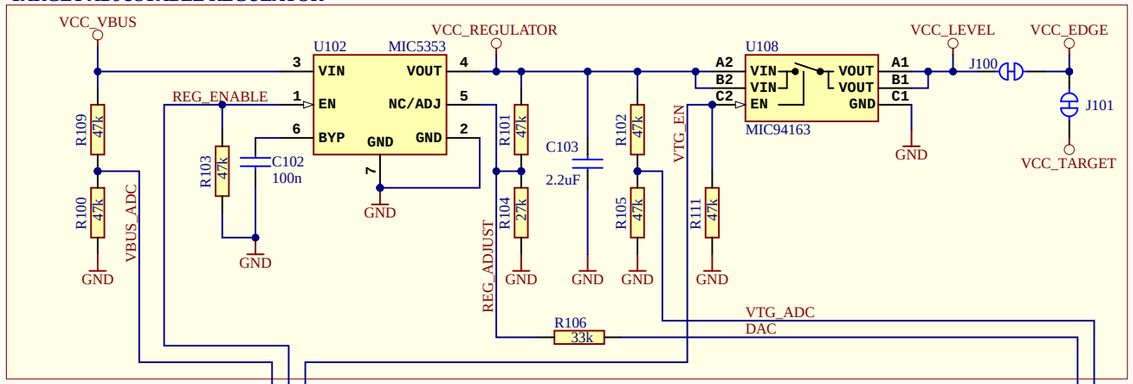

J100:
Cut-strap used for full separation of target power from the level shifters and on-board regulators.
- For current measurements using an external power supply, this strap could be cut for more accurate measurements. Leakage back through the switch is in the micro ampere range.

J101:
This is footprint for a 1x2 100mil pitch pin-header that can be used for easy current measurement to the target microcontroller and the LED / Button. To use the footprint:
- Cut the track between the holes, and mount a pin-header

MIC5353:
Vin: 2.6V to 6V
Vout: 1.25V to 5.1V
Imax: 500mA
Dropout (typical): 50mV@150mA, 160mV @ 500mA
Accuracy: 2% initial
Thermal shutdown and current limit

Maximum output voltage is limited by the input voltage and the dropout voltage in the regulator. (Vmax = Vin - dropout)

Adjustable output and limitations:
- The DEBUGGER can adjust the output voltage of the regulator between 1.25V and 5.1V to the target.
- The voltage output is limited by the input (USB), which can vary between 4.40V to 5.25V
- The level shifters have a minimal voltage level of 1.65V and will limit the minimum operating voltage allowed for the target to still allow communication.
- The MIC94163 has a minimal voltage level of 1.70V and will limit the minimum voltage delivered to the target.
- Firmware configuration will limit the voltage range to be within the the target specification.

Interface / Signal	ICSP TARGET	UPDI TARGET
CDC TX	UART RX	UART RX
CDC RX	UART TX	UART TX
DBG0	DAT	UPDI
DBG1	CLK	GPIO
DBG2	GPIO	GPIO
DBG3	$\overline{\text{MCLR}}$	$\overline{\text{RESET}}$
VCC	-	-

MIC5528:
Vin: 2.5V to 5.5V
Vout: Fixed 3.3V
Imax: 500mA
Dropout: 260mV @ 500mA

DEBUGGER TESTPOINT

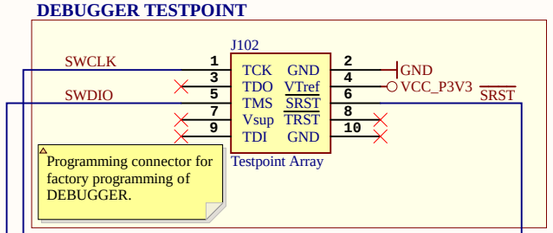

Programming connector for factory programming of DEBUGGER.

DEBUGGER REGULATOR

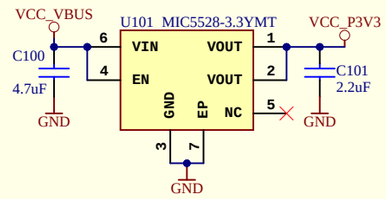

DEBUGGER POWER/STATUS LED

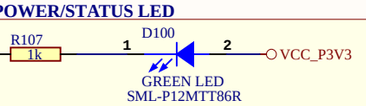

DEBUGGER USB MICRO-B CONNECTOR

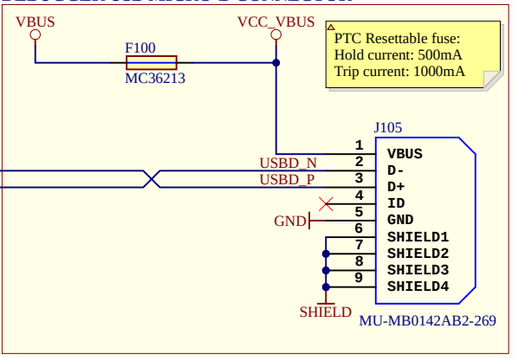

ID PIN

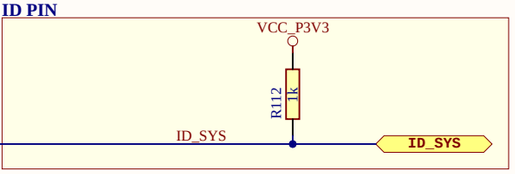

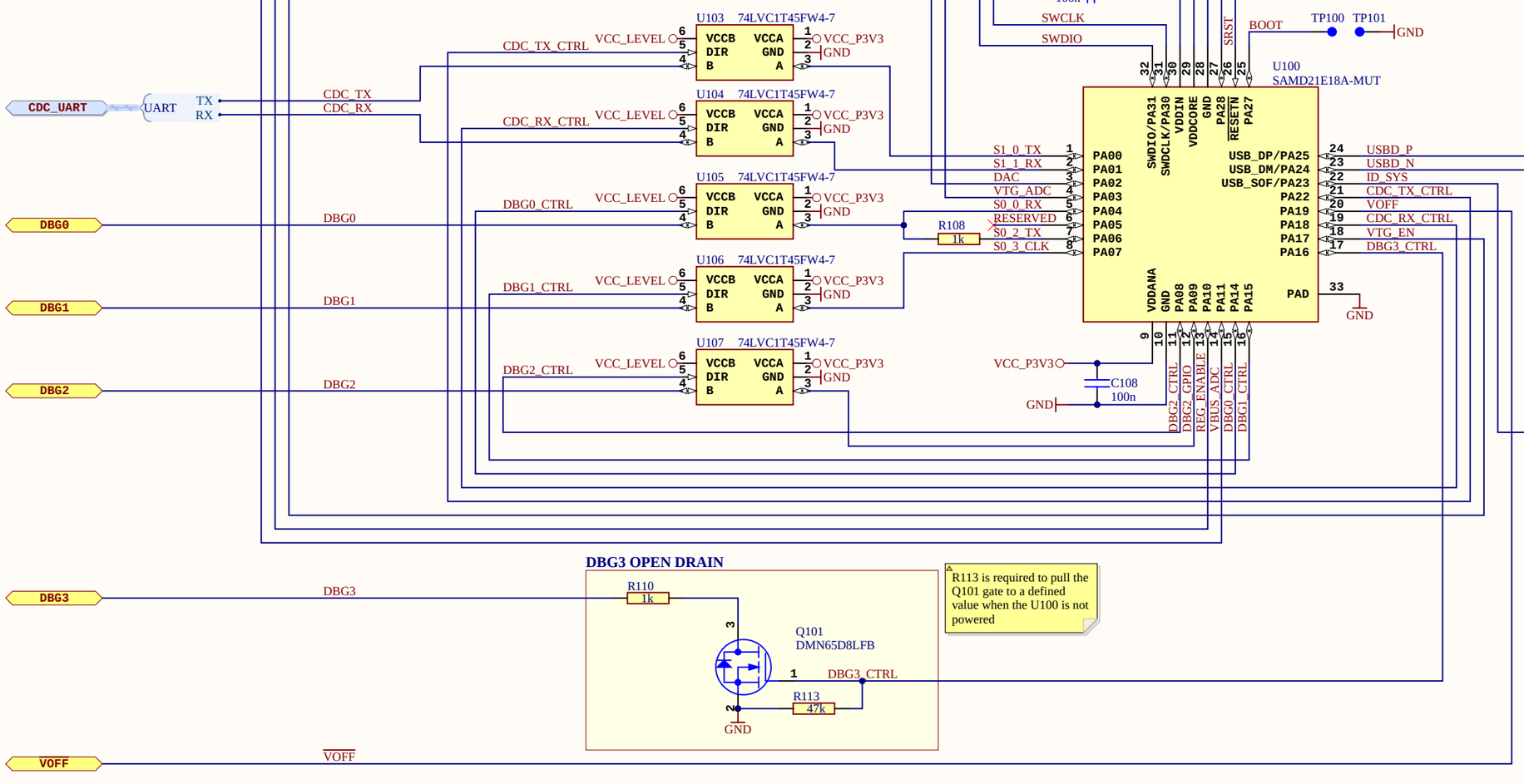

DBG3 OPEN DRAIN

R113 is required to pull the Q101 gate to a defined value when the U100 is not powered

VOFF

Drawn By:	PB
Engineer:	AH, TF
Project Title	*AVR128DA48 Curiosity Nano*
Sheet Title	Debugger
Size	A3
PCB Assembly Number:	A09-3280
PCBA Revision:	3
PCB Number:	A08-3002
PCB Revision:	3
File:	AVR128DA48_Curiosity_Nano_Debugger.SchDoc
Date:	2/20/2020
Page:	3 of 4

Designed with Altium
Altium.com

Revision History

PCB Assembly Rev 1:

Design Changes:

Initial Design

PCB:

PCB revision 1

PCB Assembly Rev 2:

Design Changes:

Added 100-mil 1x2 pin header footprint on the microcontroller power net for easier power measurement.

PCB:

PCB revision 2
Edge connector footprint modified with 8-mil stagger to allo usage of pin headers without soldering.

PCB Assembly Rev 3:

Design Changes:
---
* Remapped pinout to optimize Touch extention kit compatibility
* Changed 32768Hz crystal (XC200) to an available version
* Changed crystal load capacitances to match crystal

PCB:

PCB revision 3

Drawn By: PB		MICROCHIP	
Engineer: AH, TF			
Project Title: *AVR128DA48 Curiosity Nano*			Designed with Altium — Altium.com
Sheet Title: Revision History			
Size: A3	PCB Assembly Number: A09-3280	PCBA Revision: 3	
	PCB Number: A08-3002	PCB Revision: 3	Date: 2/20/2020
File: AVR128DA48_Curiosity_Nano_Revision_History.SchDoc			Page: 4 of 4

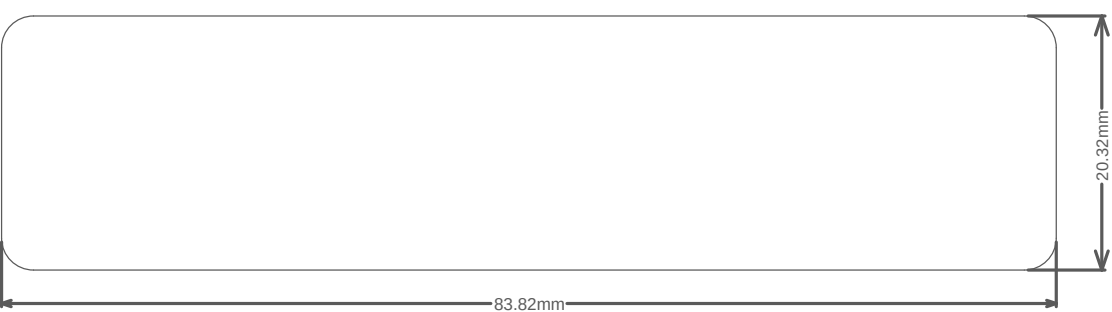
20.32mm
83.82mm

Connector Placement

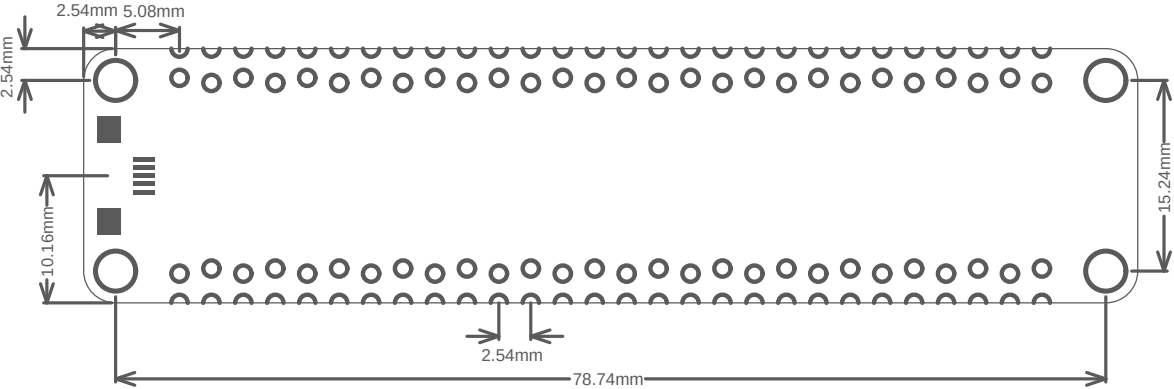

Test Point Placement

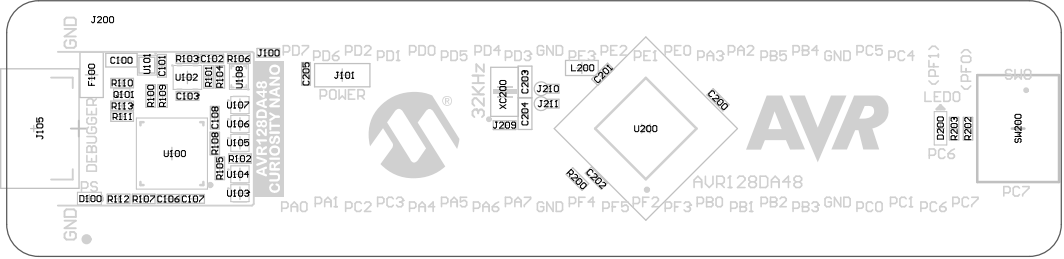
J200
GND
J100
PD7 PD6 PD2 PD1 PD0 PD5 PD4 PD3 GND PE3 PE2 PE1 PE0 PA3 PA2 PB5 PB4 GND PC5 PC4
(PF1)
(PF0)
SW0
F100
C100
U101
C101
R103
C102
R106
U102
R101
R104
U108
R110
Q101
R113
R111
R100
R109
C103
U107
U106
U105
R102
U104
U103
U100
R108
C108
R105
AVR128DA48
CURIOSITY NANO
DEBUGGER
PS
J105
D100
R112
R107
C106
C107
C205
J101
POWER
32KHz
XC200
C203
C204
J209
J210
J211
L200
C201
C200
U200
R200
C202
AVR128DA48
LED0
D200
R203
R202
SW200
PC6
PC7
PA0 PA1 PC2 PC3 PA4 PA5 PA6 PA7 GND PF4 PF5 PF2 PF3 PB0 PB1 PB2 PB3 GND PC0 PC1 PC6 PC7
GND

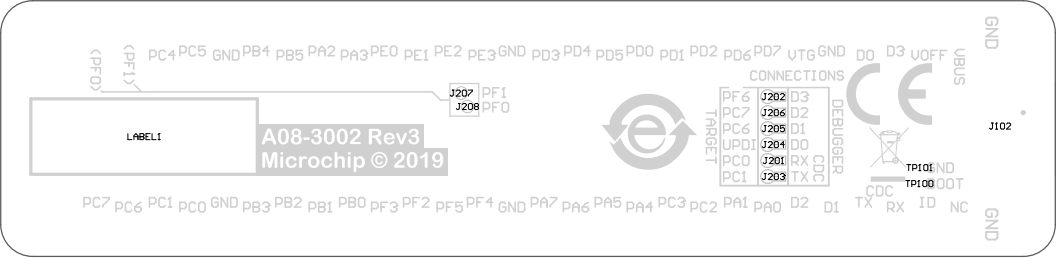

PC4 PC5 GND PB4 PB5 PA2 PA3 PE0 PE1 PE2 PE3 GND PD3 PD4 PD5 PD0 PD1 PD2 PD6 PD7 VTG GND D0 D3 VOFF VBUS
GND
<PF0>
<PF1>
J207 PF1
J208 PF0
LABEL1
A08-3002 Rev3
Microchip © 2019
CONNECTIONS
TARGET
PF6 J202 D3
PC7 J206 D2
PC6 J205 D1
UPDI J204 D0
PC0 J201 RX
PC1 J203 TX
CDC
DEBUGGER
J102
TP101 GND
TP100 BOOT
CDC
PC7 PC6 PC1 PC0 GND PB3 PB2 PB1 PB0 PF3 PF2 PF5 PF4 GND PA7 PA6 PA5 PA4 PC3 PC2 PA1 PA0 D2 D1 TX RX ID NC
GND

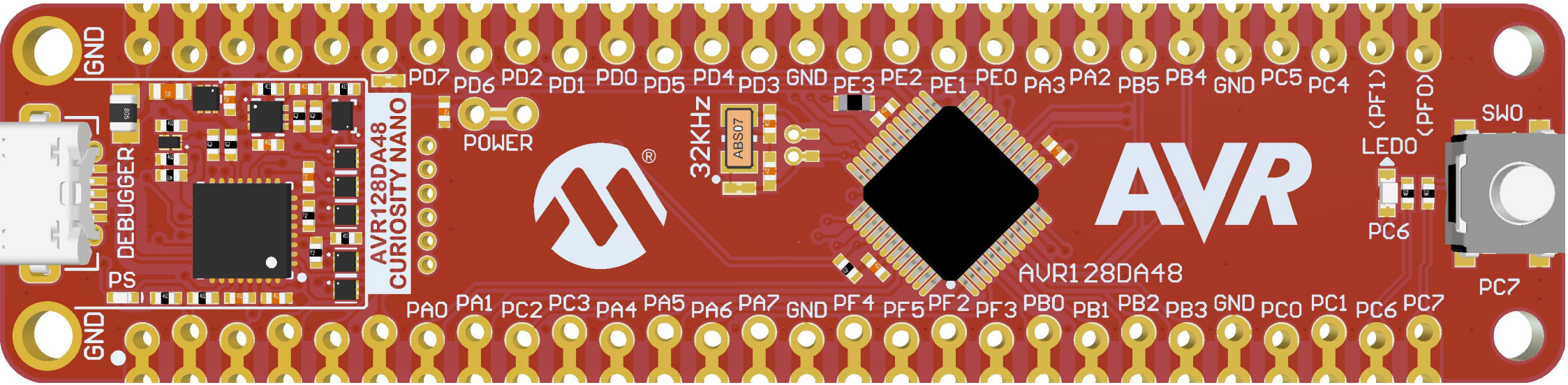
GND
PD7 PD6 PD2 PD1 PD0 PD5 PD4 PD3 GND PE3 PE2 PE1 PE0 PA3 PA2 PB5 PB4 GND PC5 PC4
(PF1)
(PF0)
SW0
LED0
PC6
PC7
DEBUGGER
PS
AVR128DA48 CURIOSITY NANO
POWER
32KHz
ABS07
AVR
AVR128DA48
PA0 PA1 PC2 PC3 PA4 PA5 PA6 PA7 GND PF4 PF5 PF2 PF3 PB0 PB1 PB2 PB3 GND PC0 PC1 PC6 PC7
GND

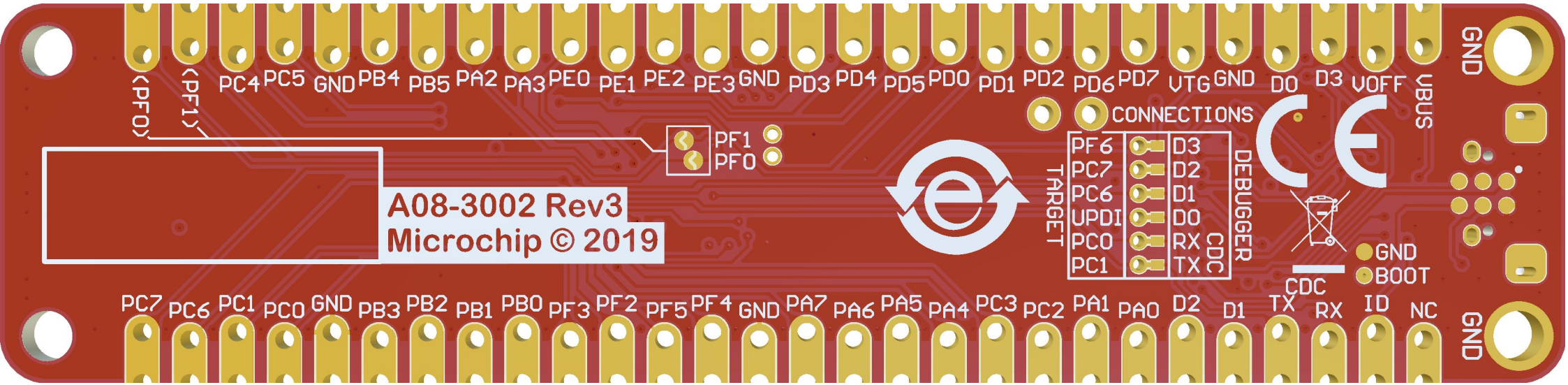
(PF0)
(PF1)
PC4 PC5 GND PB4 PB5 PA2 PA3 PE0 PE1 PE2 PE3 GND PD3 PD4 PD5 PD0 PD1 PD2 PD6 PD7 VTG GND D0 D3 VOFF VBUS
GND
PF1
PF0
CONNECTIONS
TARGET
PF6
PC7
PC6
UPDI
PC0
PC1
D3
D2
D1
D0
RX
TX
CDC
DEBUGGER
A08-3002 Rev3
Microchip © 2019
CDC
GND
BOOT
PC7 PC6 PC1 PC0 GND PB3 PB2 PB1 PB0 PF3 PF2 PF5 PF4 GND PA7 PA6 PA5 PA4 PC3 PC2 PA1 PA0 D2 D1 TX RX ID NC
GND

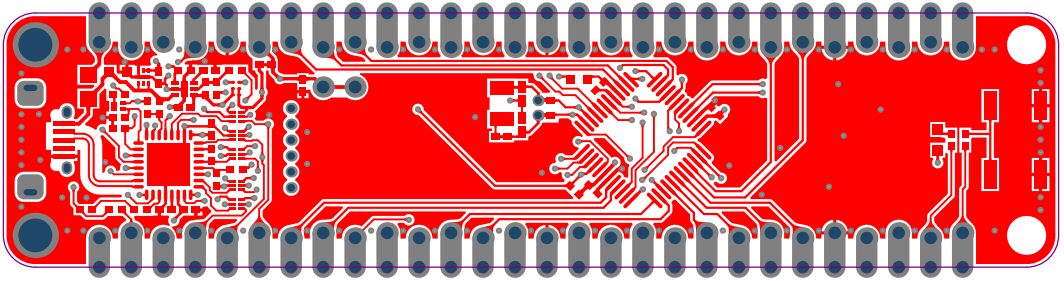

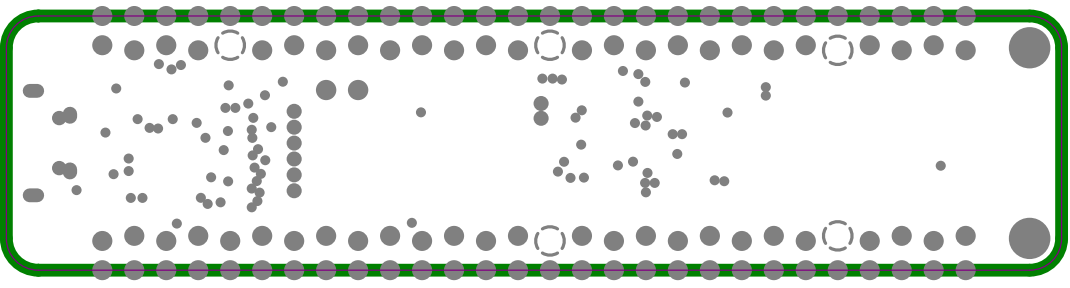

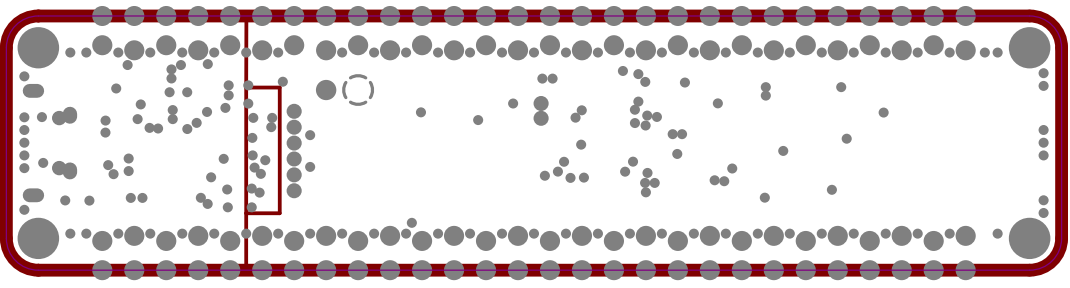

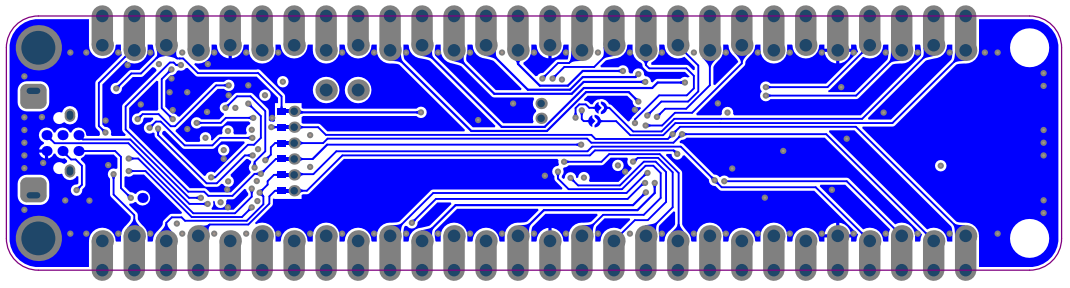

Component list

Bill of Materials Fitted for Variant [Default Assembly] of Project [AVR128DA48_Curiosity_Nano.PrjPcb] (No PCB Document Selected)

Source Data From: AVR128DA48_Curiosity_Nano.PrjPcb

Project: AVR128DA48_Curiosity_Nano.PrjPcb

Variant: Default Assembly

Report Date: 2/20/2020 1:24 PM

Print Date:

Fitted	Designator	Quantity	Value	Manufacturer	MPN	Description
Fitted	C100	1	4.7uF	WALSIN Technology Corporation	0603X475K100CT	Ceramic capacitor, SMD 0603, X5R, 10V, 10% (de31036)
Fitted	C101	1	2.2uF	Kemet	C0402C225M9PAC	Ceramic capacitor, SMD 0402, X5R, 6.3V, +/-20%
Fitted	C102, C107, C108, C200, C201, C202	6	100n	Kemet	C0402C104K4RACTU	Ceramic capacitor, SMD 0402, X7R, 16V, +/-10%
Fitted	C103, C205	2	2.2uF	TDK	C1005X5R1A225K	CAP CER 2.2UF 10V 10% X5R 0402
Fitted	C106	1	1u	Kemet	C0402C105K9PAC	Ceramic capacitor, SMD 0402, X5R, 6.3V, +/-10% (de26942)
Fitted	C203, C204	2	12p	Kemet	C0402C120J5GAC7867	Ceramic capacitor, SMD 0402, NP0, 50V, +/-5%
Fitted	D100	1	GREEN LED	ROHM	SML-P12MTT86R	LED, SMD 0402, Green, Wave length=569nm, 2.1mcd @ (1mA, 1.9Vf)rohm
Fitted	D200	1	YELLOW LED	ROHM	SML-D12Y1WT86	LED, SMD 0603, Yellow , Wave length=590nm, 100mcd @ (20mA, 2.2Vf) rohm
Fitted	F100	1	MC36213	Multicomp	MC36213	Resetable PTC fuse, Ih = 0.5A, It = 1.0A, 0805 package
Fitted	FW1	1	nEDBG firmware			nEDBG firmware
Fitted	J105	1	MU-MB0142AB2-269	Allen Creations Corp.	MU-MB0142AB2-269	USB micro AB, Surface mount signals and DIP shield
Fitted	L200	1	BLM18PG471SN1	Murata	BLM18PG471SN1	SMD RF inductor 0603. Z=470Ohm (@100MHz), Max R(dc)=0.20Ohm, Max current=1A
Fitted	LABEL1	1	Label PCBA	ACT Logimark AS	505462	PCBA identification label PP Top White Gloss
Fitted	PCB1	1	AVR128DA48 Curiosity Nano PCB documentation			AVR128DA48 Curiosity Nano PCB documentation
Fitted	PCBADOC1	1	A09-3280 PCBA files			AVR128DA48 Curiosity Nano PCBA documentation
Fitted	Q101	1	DMN65D8LFB	Diodes Incorporated	DMN65D8LFB-7	N-channel MOSFET, DFN1006-3 (SOT883), 60V, 330mA, 4Ohm
Fitted	R100, R101, R102, R103, R105, R109, R111, R113, R200	9	47k	KOA	RK73H1ETTP4702F	Thick film resistor, SMD 0402, 1/16W, 1%
Fitted	R104	1	27k	Yageo	RC0402FR-0727KL	Thick film resistor, SMD 0402, 1/16W, 1%
Fitted	R106	1	33k	ASJ Holdings	CR10-3302-FK	Thick film resistor, SMD 0402, 1/16W, 1%
Fitted	R107, R108, R110, R112, R202, R203	6	1k	ASJ Holdings	CR10-1001-FK	Thick film resistor, SMD 0402, 1/16W, 1%
Fitted	SW200	1	TS604VM1-035CR	Dailywell Electronics Co.LTD	TS604VM1-035CR-R	SWITCH, SMD, 260gf, 6.4mm X 6.2mm
Fitted	TEST1	1	AVR128DA48 Curiosity Nano test			Fixture test for AVR128DA48 Curiosity Nano
Fitted	TESTDOC1	1	Curiosity Nano Test Instructions			Generic Test Instructions for Curiosity Nano
Fitted	U100	1	SAMD21E18A-MUT	Microchip	ATSAMD21E18A-MUT	32-bit RISC MCU 32pin
Fitted	U101	1	MIC5528-3.3YMT	Microchip	MIC5528-3.3YMT-T5	LDO 3.3V 0.5A 6TDFN
Fitted	U102	1	MIC5353	Microchip	MIC5353YMT-TR	500mA Ultra Low Dropout LDO regulator, 2% accuracy, 1.6x1.6mm MLF
Fitted	U103, U104, U105, U106, U107	5	74LVC1T45FW4-7	Diodes Incorporated	74LVC1T45FW4-7	Single-Bit Dual-Supply Transceive, 1.65-5.5 Translation and 3-State Outputs
Fitted	U108	1	MIC94163	Microchip	MIC94163YCS-TR	Loadswitch, Rds(on) = 14.5mohm, 1.0mm x 1.5mm WLCSP, reverse blocking
Fitted	U200	1	AVR128DA48 TQFP	Microchip	AVR128DA48T-I/PT	8-bit RISC MCU, 128K Flash, 48pin TQFP, 7x7mm, 0.5m pitch package
Fitted	XC200	1	32.768kHz	Abracon	ABS07-32.768kHz-9-T	Crystal, 32.768kHz, CL=9.0pF, ESR=70kOhm, SMD LxW=3.2 x 1.5mm, 20ppm
		54				

Approved

Notes