CDB5484U

CDB5484U Engineering Board and GUI Software

Features

- Standalone Power Meter Application
- Voltage and Current Interfaces
- Low- and High-voltage Sensor Connections
- Adaptable Sensor Filters Onboard
- USB Communication with PC
- UART/SPI Isolated Communication
- Onboard C8051F342 Microcontroller
- Single Supply Operation from USB or an External +5V DC Supply
- Onboard DC-DC Converter and Regulator
- LCD Power Monitor Display
- LabWindows®/CVI® GUI Software
  - Full Register Setup and Chip Control
  - Simplified Register
  - Quick Calibration Control
  - FFT Analysis
  - Time Domain Analysis
  - Noise Histogram Analysis
- Voltage Reference Access

General Description

The CDB5484U is an extensive tool designed to evaluate the functionality and performance of Cirrus Logic's CS5484 power/energy measurement device.

Multiple analog input connection options, configuration input filters, direct and isolated digital interfaces, multiple power supply options, an onboard programmable microcontroller, and visual LEDs with an LCD panel make the board a flexible and powerful customer development tool for various power/energy measurement applications.

The GUI software provides easy and complete access and control to the onboard CS5484 device. It also includes the function of raw ADC data collection with time domain, frequency domain, and histogram analysis.

Schematics in the PADS™ PowerLogic™ format are available on request.

ORDERING INFORMATION

CDB5484U-Z Evaluation Board

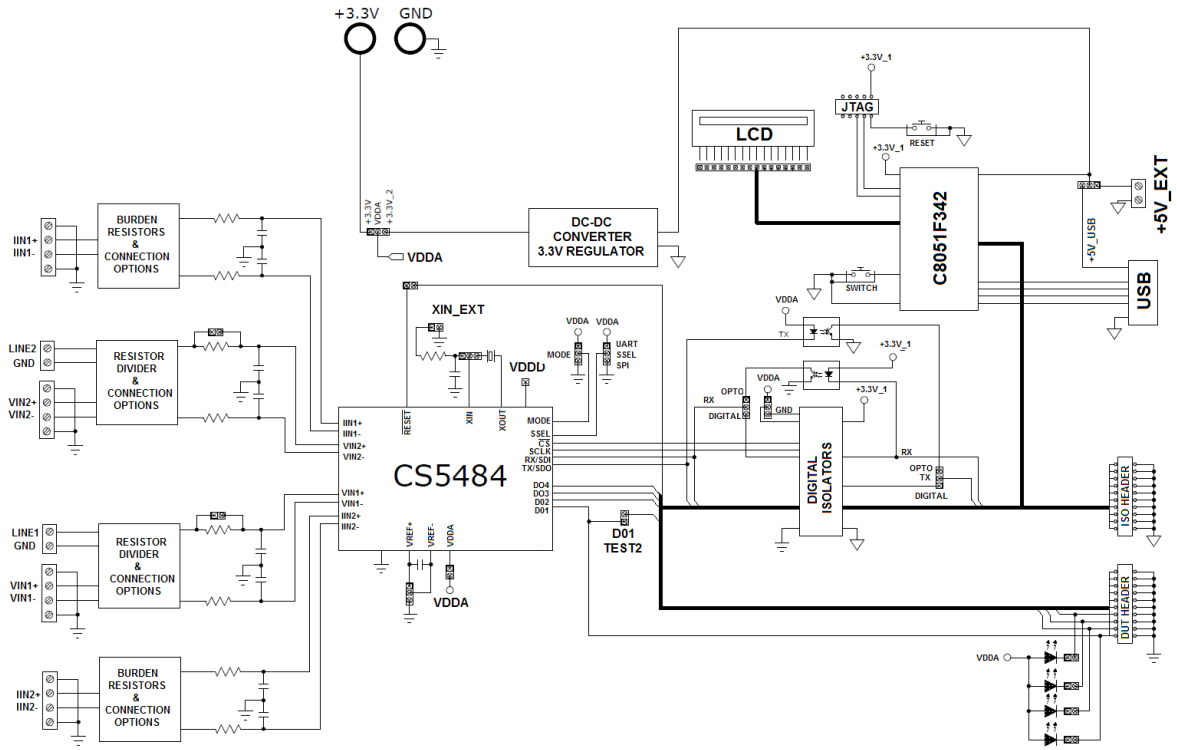

Copyright © Cirrus Logic, Inc. 2012
(All Rights Reserved)

IMPORTANT SAFETY INSTRUCTIONS

Read and follow all safety instructions prior to using this demonstration board.

This Engineering Evaluation Unit or Demonstration Board must only be used for assessing IC performance in a laboratory setting. This product is not intended for any other use or incorporation into products for sale.

This product must only be used by qualified technicians or professionals who are trained in the safety procedures associated with the use of demonstration boards.

DANGER Risk of Electric Shock

- The direct connection to the AC power line and the open and unprotected boards present a serious risk of electric shock and can cause serious injury or death. Extreme caution needs to be exercised while handling this board.
- Avoid contact with the exposed conductor or terminals of components on the board. High voltage is present on exposed conductor and it may be present on terminals of any components directly or indirectly connected to the AC line.
- Dangerous voltages and/or currents may be internally generated and accessible at various points across the board.
- Charged capacitors store high voltage, even after the circuit has been disconnected from the AC line.
- Make sure that the power source is off before wiring any connection. Make sure that all connectors are well connected before the power source is on.
- Follow all laboratory safety procedures established by your employer and relevant safety regulations and guidelines, such as the ones listed under, OSHA General Industry Regulations - Subpart S and NFPA 70E.

WARNING Suitable eye protection must be worn when working with or around demonstration boards. Always comply with your employer's policies regarding the use of personal protective equipment.

WARNING All components and metallic parts may be extremely hot to touch when electrically active.

Contacting Cirrus Logic Support

For all product questions and inquiries contact a Cirrus Logic Sales Representative. To find the one nearest to you go to www.cirrus.com

IMPORTANT NOTICE

Cirrus Logic, Inc. and its subsidiaries ("Cirrus") believe that the information contained in this document is accurate and reliable. However, the information is subject to change without notice and is provided "AS IS" without warranty of any kind (express or implied). Customers are advised to obtain the latest version of relevant information to verify, before placing orders, that information being relied on is current and complete. All products are sold subject to the terms and conditions of sale supplied at the time of order acknowledgment, including those pertaining to warranty, indemnification, and limitation of liability. No responsibility is assumed by Cirrus for the use of this information, including use of this information as the basis for manufacture or sale of any items, or for infringement of patents or other rights of third parties. This document is the property of Cirrus and by furnishing this information, Cirrus grants no license, express or implied under any patents, mask work rights, copyrights, trademarks, trade secrets or other intellectual property rights. Cirrus owns the copyrights associated with the information contained herein and gives consent for copies to be made of the information only for use within your organization with respect to Cirrus integrated circuits or other products of Cirrus. This consent does not extend to other copying such as copying for general distribution, advertising or promotional purposes, or for creating any work for resale.

CERTAIN APPLICATIONS USING SEMICONDUCTOR PRODUCTS MAY INVOLVE POTENTIAL RISKS OF DEATH, PERSONAL INJURY, OR SEVERE PROPERTY OR ENVIRONMENTAL DAMAGE ("CRITICAL APPLICATIONS"). CIRRUS PRODUCTS ARE NOT DESIGNED, AUTHORIZED OR WARRANTED FOR USE IN AIRCRAFT SYSTEMS, MILITARY APPLICATIONS, PRODUCTS SURGICALLY IMPLANTED INTO THE BODY, AUTOMOTIVE SAFETY OR SECURITY DEVICES, LIFE SUPPORT PRODUCTS OR OTHER CRITICAL APPLICATIONS. INCLUSION OF CIRRUS PRODUCTS IN SUCH APPLICATIONS IS UNDERSTOOD TO BE FULLY AT THE CUSTOMER'S RISK AND CIRRUS DISCLAIMS AND MAKES NO WARRANTY, EXPRESS, STATUTORY OR IMPLIED, INCLUDING THE IMPLIED WARRANTIES OF MERCHANTABILITY AND FITNESS FOR PARTICULAR PURPOSE, WITH REGARD TO ANY CIRRUS PRODUCT THAT IS USED IN SUCH A MANNER. IF THE CUSTOMER OR CUSTOMER'S CUSTOMER USES OR PERMITS THE USE OF CIRRUS PRODUCTS IN CRITICAL APPLICATIONS, CUSTOMER AGREES, BY SUCH USE, TO FULLY INDEMNIFY CIRRUS, ITS OFFICERS, DIRECTORS, EMPLOYEES, DISTRIBUTORS AND OTHER AGENTS FROM ANY AND ALL LIABILITY, INCLUDING ATTORNEYS' FEES AND COSTS, THAT MAY RESULT FROM OR ARISE IN CONNECTION WITH THESE USES.

Cirrus Logic, Cirrus, the Cirrus Logic logo designs, EXL Core, and the EXL Core logo design are trademarks of Cirrus Logic, Inc. All other brand and product names in this document may be trademarks or service marks of their respective owners.

SPI is a trademark of Motorola, Inc.

LabWindows and CVI are registered trademarks of National Instruments, Inc.

Windows, Windows 2000, Windows XP, and Windows 7 are trademarks or registered trademarks of Microsoft Corporation.

PADS and PowerLogic are trademarks of Mentor Graphics Corporation.

TABLE OF CONTENTS

1. HARDWARE 5
1.1 Introduction 5
1.2 Evaluation Board Overview 5
1.3 Analog Section 6
1.4 Digital Section 9
1.5 Power Supply Section 11
1.6 Typical Sensor Connections 12
1.7 Standalone Meter Application 15
2. SOFTWARE 16
2.1 Installation Procedure 16
2.2 Using the Software 16
2.3 Start-up Window 17
2.4 Connect Menu 17
2.5 System Menu 21
2.6 Calibration Window 25
2.7 Conversion Window 27
2.8 Cirrus Test Window 29
Appendix A. Bill of Materials 38
Appendix B. Schematics 40
Appendix C. Layer Plots 43

LIST OF FIGURES

Figure 1. CDB5484U Assembly Drawing and Default Configuration 5
Figure 2. Voltage Channel — Low-voltage Input 6
Figure 3. Voltage Channel — High-voltage Input 7
Figure 4. Current Channel — Low-voltage Input 8
Figure 5. MCU Connection Window 9
Figure 6. Shunt Sensor Power Meter 12
Figure 7. Current Transformer Power Meter 13
Figure 8. Rogowski Coil Power Meter 14
Figure 9. Standalone Power Meter Measurements 15
Figure 10. GUI Start-up Window 17
Figure 11. Connect to the CDB board Window 18
Figure 12. Connect Menu Showing Successful USB Connection 18
Figure 13. USB Error Message 18
Figure 14. Connect Menu Showing Serial Connection Options 19
Figure 15. UART Serial Port Selection Window, UART Selected 19
Figure 16. SPI Serial Port Selection Window, SPI Selected 19
Figure 17. Unknown Chip ID Error Message 20
Figure 18. System Pull-down Options 21
Figure 19. Setup Window 22
Figure 20. Calibration Window 25
Figure 21. Conversion Window 27
Figure 22. Cirrus Test Pull-down Options 29
Figure 23. Data Collection Window 29
Figure 24. Data Collection UART Error Message 30
Figure 25. Data Collection Output Window 31
Figure 26. Data Collection Configuration Window 31
Figure 27. Histogram Analysis 34
Figure 28. FFT Analysis 34
Figure 29. Time Domain Analysis 35
Figure 30. Data Collection to File Window 36
Figure 31. Setup and Test Window 37
Figure 32. Bill of Materials (Page 1 of 2) 38
Figure 33. Bill of Materials (Page 2 of 2) 39
Figure 34. Schematic - Analog Inputs 40
Figure 35. Schematic - CS5484 and Socket 41
Figure 36. Schematic - Microcontroller and USB Interface 42
Figure 37. Top Silkscreen 43
Figure 38. Top Routing 45
Figure 39. Bottom Routing 46
Figure 40. Solder Paste Mask 47

1. HARDWARE

1.1 Introduction

The CDB5484U evaluation board provides a convenient means of evaluating the CS5484 energy measurement IC. The CDB5484U evaluation board operates from a single USB or 5V power supply. An optional 3.3V power supply input is available for powering the CS5484 directly. The evaluation board interfaces the CS5484 to a PC via a USB cable. To accomplish this, the board comes equipped with a C8051F342 microcontroller and a USB interface. Additionally, the CDB5484U GUI software provides easy access to the internal registers of the CS5484. The software also provides a means to display the on-chip ADC performance in the time domain or frequency domain.

1.2 Evaluation Board Overview

The board is partitioned into two main sections: analog and digital. The analog section consists of the CS5484, passive anti-aliasing filters, and a high-voltage section with attenuation resistor networks. The digital section consists of the C8051F342 microcontroller, LCD, test switches, reset circuitry, and USB interface. The board also has a user-friendly power supply connection. The assembly information and default configurations for jumpers are shown below.

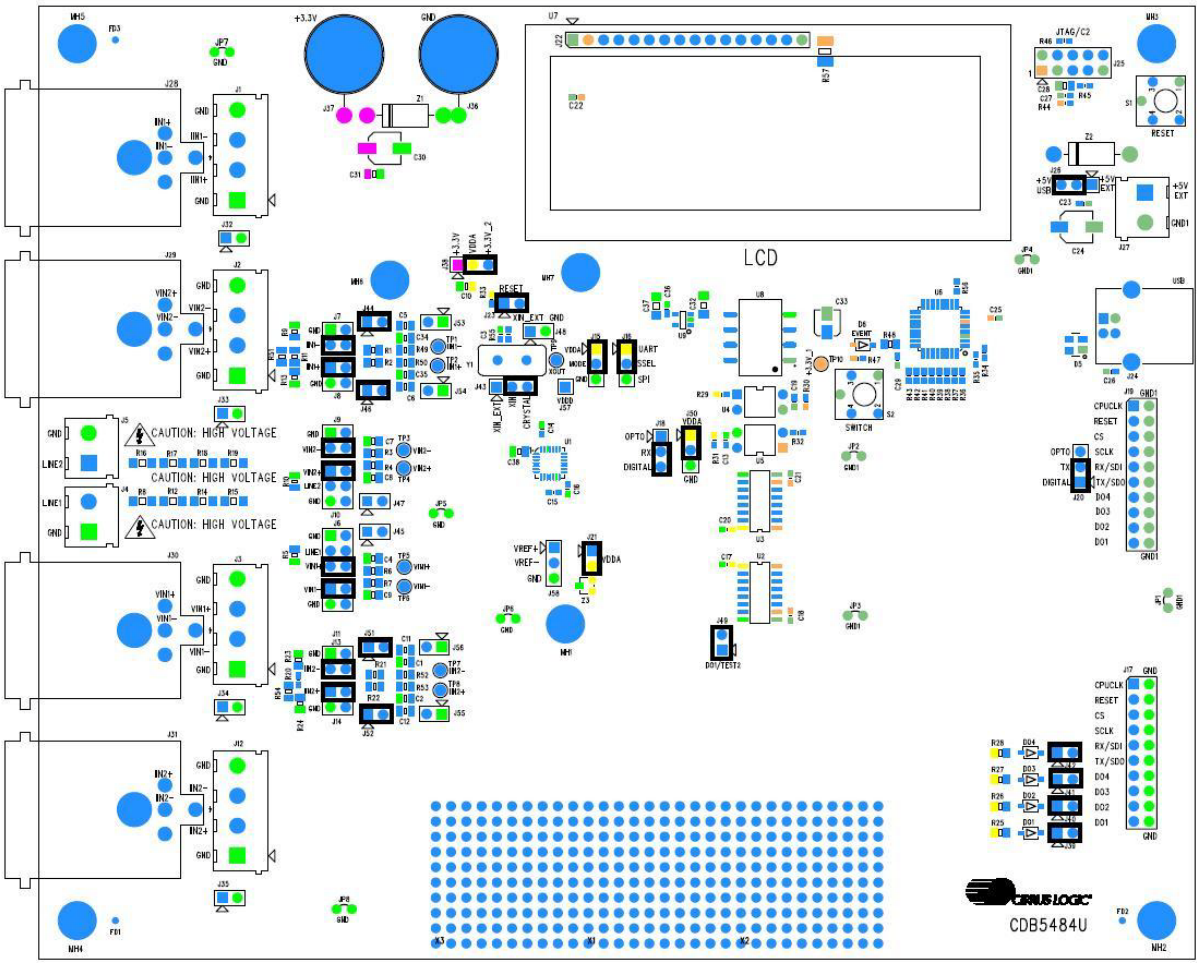

Figure 1. CDB5484U Assembly Drawing and Default Configuration

1.3 Analog Section

The analog section of the CDB5484U is highly configurable. Onboard signal conditioning options for the voltage and current channels enable most applications to interface directly to the sensors. The following two sections define the voltage and current channel configurations.

1.3.1 Voltage Sensor Connection

There are three input signal options for the voltage channel inputs (VIN1±, VIN2±) which include an external low-voltage signal (via screw terminals or XLR connections), high-voltage line inputs, or GND. Table 1 illustrates the options available.

Table 1. Voltage Channel Input Signal Selection

INPUT	Description	J11	J6	J9	J10
VIN1± or VIN2±	Selects External Low-voltage Fully Differential Signal	VIN1- VIN1- GND VIN1- *(Default)*	GND VIN1+ Line1 VIN1+ VIN1+ VIN1+ *(Default)*	GND VIN2- VIN2- VIN2- *(Default)*	VIN2+ VIN2+ Line2 VIN2+ GND VIN2+ *(Default)*
VIN1± or VIN2±	Selects External Low-voltage Single-ended Signal	VIN1- VIN1- GND VIN1-	GND VIN1+ Line1 VIN1+ VIN1+ VIN1+	GND VIN2- VIN2- VIN2-	VIN2+ VIN2+ Line2 VIN2+ GND VIN2+
GND	Selects Grounding the Input	VIN1- VIN1- GND VIN1-	GND VIN1+ Line1 VIN1+ VIN1+ VIN1+	GND VIN2- VIN2- VIN2-	VIN2+ VIN2+ Line2 VIN2+ GND VIN2+
High Voltage Line1 or Line2	Selects External High-voltage AC Line Signal	VIN1- VIN1- GND VIN1-	GND VIN1+ Line1 VIN1+ VIN1+ VIN1+	GND VIN2- VIN2- VIN2-	VIN2+ VIN2+ Line2 VIN2+ GND VIN2+

The CDB5484U evaluation board provides screw-type terminals (J3 and J2) or XLR connectors (J30 and J29) to connect low-voltage input signals to the voltage channels (see Figure 2). The screw terminals are labeled as VIN1+ / VIN1- and VIN2+ / VIN2-. An R-C network at each channel input provides a simple configurable anti-alias filter. By installing jumpers on J6 to position VIN1+, J11 to position VIN1-, J10 to position VIN2+, and J9 to position VIN2-, the input voltage signal is supplied from the screw terminals or XLR connections.

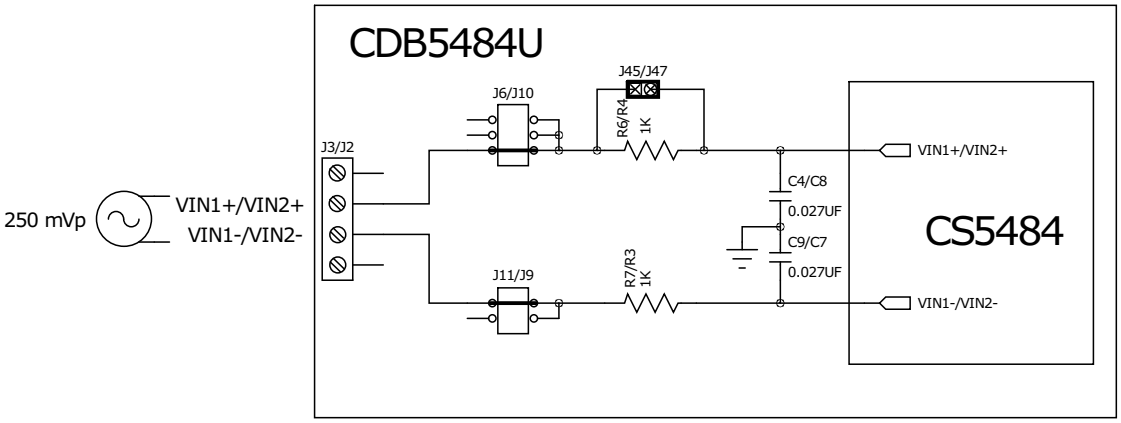

Figure 2. Voltage Channel — Low-voltage Input

The CDB5484U evaluation board provides screw-type terminals (J4 and J5) to connect high-voltage line inputs. By installing jumpers on J6 to position LINE1, J10 to position LINE2, J11 to position GND, and J9 to position GND, the input voltage signal is supplied from the high-voltage inputs. Extreme care should be used when connecting high-voltage signals to the CDB5484U evaluation board (see Figure 3).

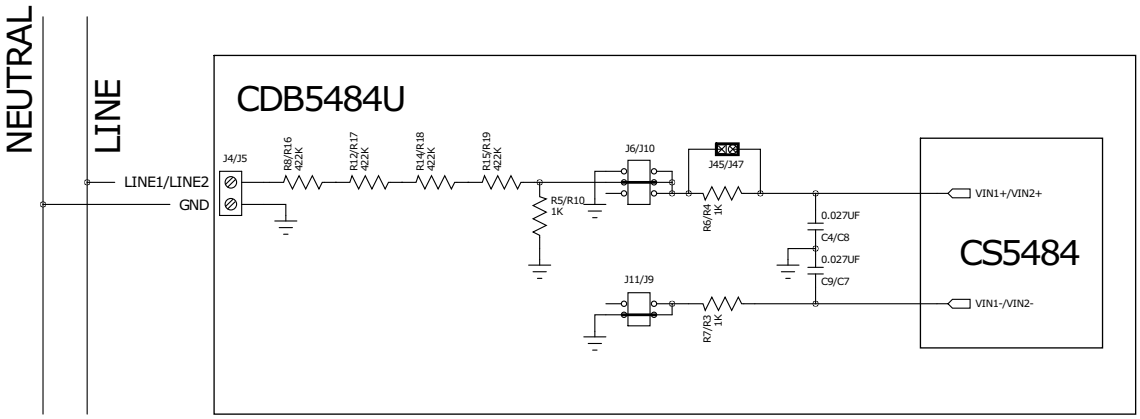

Figure 3. Voltage Channel — High-voltage Input

The default attenuation networks provide the following attenuation:

$$\frac{1\text{k}}{(4 \times 422\text{k}) + 1\text{k}} = \frac{1}{1689}$$

With the CS5484 input range of 250 mVp at a maximum AC line input of:

$$300\text{Vrms} = \frac{250\text{mVp}}{\sqrt{2}} \times 1689$$

is acceptable. It is recommended to apply a 10% margin for the AC line input (270 Vrms).

The CDB5484U evaluation board provides input shorting options for calibration and noise performance measurements. With a jumper on J6, J11, J10, and J9 in the GND position, the inputs are connected to analog ground (GND).

1.3.2 Current Sensor Connection

Current input options include an external signal (via screw terminals or XLR connectors) or GND. Table 2 illustrates the options available.

Table 2. Current Channel Input Signal Selection

INPUT	Description	J8	J7	J14	J13
IIN1± or IIN2±	Selects External Low-voltage, Fully Differential Signal	IIN1+ IIN1+ GND IIN1+ *(Default)*	GND IIN1- IIN1- IIN1- *(Default)*	IIN2+ IIN2+ GND IIN2+ *(Default)*	GND IIN2- IIN2- IIN2- *(Default)*
IIN1± or IIN2±	Selects External Low-voltage, Single-ended Signal	IIN1+ IIN1+ GND IIN1+	GND IIN1- IIN1- IIN1-	IIN2+ IIN2+ GND IIN2+	GND IIN2- IIN2- IIN2-
GND	Selects Grounding the Input	IIN1+ IIN1+ GND IIN1+	GND IIN1- IIN1- IIN1-	IIN2+ IIN2+ GND IIN2+	GND IIN2- IIN2- IIN2-

The CDB5484U evaluation board provides two input signal options for current channels (IIN1±, IIN2±): screw-type terminals (J1 and J2) or XLR connectors (J28 and J31) to connect input signals to the current channels. The screw terminals are labeled as IIN1+ / IIN1-, and IIN2+ / IIN2-. An R-C network at each channel input provides a simple configurable anti-alias filter.

By installing jumpers on J8 to position IIN1+, J7 to position IIN1-, J14 to position IIN2+, and J13 to position IIN2-, the input current signal is supplied from the screw terminals or XLR connectors.

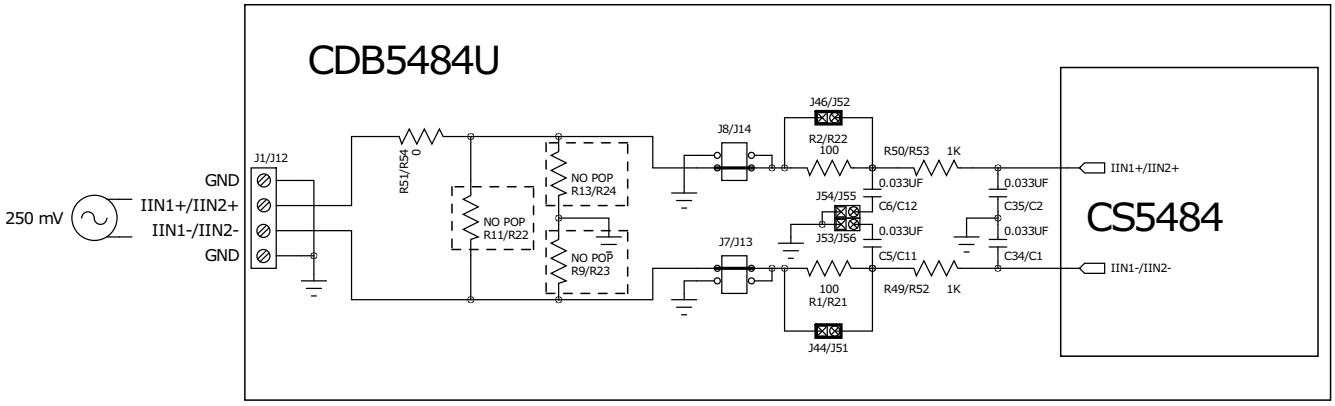

Figure 4. Current Channel — Low-voltage Input

The CDB5484U evaluation board provides input shorting options for calibration and noise performance measurements. With a jumper on J8, J7, J14, and J13 in the GND position, the inputs are connected to analog ground (GND).

1.4 Digital Section

The digital section contains the microcontroller, USB interface, LCD, optical isolation, JTAG header, reset circuitry, and external interface headers (J17 and J19). The microcontroller interfaces the UART or SPI of the CS5484 with the USB connection to the PC, enabling the GUI software to access all of the CS5484 registers and functions.

1.4.1 Serial Port Selection

Communication to the CS5484 is provided through two serial port options: UART or SPI. It is necessary to establish communication with the MCU before establishing a serial port communication protocol with the CS5484 (see Figure 5).

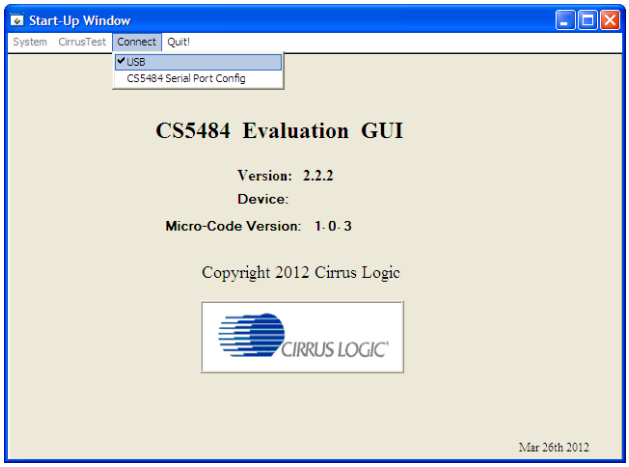

Figure 5. MCU Connection Window

For UART communication, place the SSEL jumper to the *UART* position via J16, and select *UART* in the serial port selection window. To enable SPI communications, place the SSEL jumper to the *SPI* position via J16, and select *SPI* in the serial port selection window. Table 3 provides the serial communication options on the CDB5484U board.

Table 3. Serial Communication Options

	J16	J18	J20	J50
UART	UART SSEL SPI (default)	OPTO RX DIGITAL (default)	OPTO TX DIGITAL (default)	VDDA EN2 GND (default)
SPI	UART SSEL SPI	OPTO RX DIGITAL	OPTO TX DIGITAL	VDDA EN2 GND
Low speed UART (4800 Baud Max)	UART SSEL SPI	OPTO RX DIGITAL	OPTO TX DIGITAL	VDDA EN2 GND

1.4.2 Interface to Microcontroller

Interface headers J17 and J19 are provided to allow the CDB5484U to be connected to an external energy registration device or an external microcontroller. Interface header J17 provides direct access to the CS5484 pins while interface header J19 provides an isolated connection. It is imperative to use the isolated connection (J19) when high-voltage signals are used. Failure to use isolation can result in damage to components or electrical shock. Refer to “Digital Isolation” on page 10 for details on signal isolation.

Interface header J19 can be used to connect to the external microcontroller. To connect the CS5484 to an external microcontroller, R34, R35, R36, R37, R38, R39, R40, R41, R42, and R43 must be removed from the board.

1.4.3 Digital Isolation

Two types of isolation are provided, including a low-speed optical coupler for UART-only and high-speed digital isolation for UART and SPI communication. Default jumper settings provide high-speed digital isolators. To enable high-speed digital isolators, place jumpers (J18 and J20) in the *RX to DIGITAL* position and *TX to DIGITAL* position. To enable the high-speed digital isolators, it is also necessary to install jumper (J50) in the *VDDA* position. To enable low-speed optical UART communication, place jumpers (J18 and J20) in the *RX to OPTICAL* position and *TX to OPTICAL* position.

The high-speed digital isolators operate from DC to 150 Mbps. The low-speed optical couplers operate to a maximum speed of about 4.8 kHz. All the signals supplied to the isolators are available to the MCU except CPUCLK.

1.4.4 Additional Device Pin Access

The CS5484’s digital output pins (DO1, DO2, DO3, and DO4) are routed to LEDs, which provide a simple visual check of the digital output. Jumpers J39, J40, J41, and J42 are equipped at the factory with jumpers to enable the LEDs. The DO1 digital output pin is supplied to the digital isolation using jumper J49.

The MODE pin jumper (J15) should be installed in the *VDDA to MODE* position.

The CS5484 system clock can be connected to an onboard quartz crystal, or an external clock can be supplied to the CS5484 XIN pin though jumper J48. To connect the onboard quartz crystal, install jumper J43 in the *XIN to CRYSTAL* position. To connect XIN to an external clock, install jumper J43 in the *XIN* to *XIN_EXT* position.

1.5 Power Supply Section

Table 4 illustrates the power supply connections on the evaluation board. The positive analog (VDDA) for the CS5484 can be supplied using the +3.3V binding post (J36 and J37) or the onboard +3.3V regulator. Jumper J38 allows the VDDA supply to be sourced from the +3.3V binding post (J37) or the regulated +3.3V supply. The DC-DC converter (U8) powers the onboard +3.3V regulator. Jumper J26 allows the +5V supply to be sourced from either the *+5V EXT* screw connector (J27) or the *+5V USB* supply. The +5V supplies the power for the microcontroller (8051_REGIN) and the DC-DC converter (U8). Jumper J21 is used to measure the CS5484 analog supply current and **must** be installed.

When connecting the CDB5484U board to the AC line through non-isolated sensors, it is strongly recommended that the CS5484 GND reference is connected to the neutral, the non-isolated current sensor is connected to the neutral, and the CS5484 is supplied by +3.3V isolated from AC line. The DC-DC converter (U8) provides 1kVDC isolation, while no isolation is provided for the 3.3V binding post connections. If +3.3V is used from the binding post, then the external 3.3VDC power supply must be isolated from the AC line. To prevent electric shock and damages, always use an isolated power source.

Table 4. Power Supply Selection

Supply Source	**CS5484 Source**	**Binding post** J36&J37	**USB Supply** J24	**5V Terminals** J27	**VDDA** J21	**VDDA** J38	**+3.3V_1** J26
USB	On-board 3.3 V Regulator	NC	+5V	NC	VDDA VDDA (default)	+3.3V VDDA +3.3V_2 (default)	+5V EXT +5V +5V USB (default)
External +3.3V & USB	Binding Post	+3.3 V	+5V	NC	VDDA VDDA	+3.3V VDDA +3.3V_2	+5V EXT +5V +5V USB
External +5V	On-board 3.3V regulator	NC	NC	+5V	VDDA VDDA	+3.3V VDDA +3.3V_2	+5V EXT +5V +5V USB

1.6 Typical Sensor Connections

The CDB5484U evaluation board provides connections directly to different types of sensors. Flexible on-board filter networks provide a convenient configuration for three common transducers: current shunt, current transformer (CT), or Rogowski coil.

1.6.1 Shunt Power Meter Example

An inexpensive current shunt configuration is easily achievable with the CDB5484U evaluation board. Figure 6 depicts the voltage and current connections for a shunt sensor and its associated filter configurations.

It is strongly recommended that a low-side (neutral path) current shunt is used, especially in high-voltage situations. Make sure that all signals are well connected before the power source is turned on. Extreme care should be taken when connecting high-voltage signals to the CDB5484U evaluation board.

In this configuration it is unnecessary to use a burden resistor. A single anti-alias filter is all that is required for the current channel. Below the filter corner frequency, the CS5484 inputs will see the same voltage that is across the shunt. Therefore the shunt voltage should be kept below the maximum of 50 mVp with I-Channel PGA = 50x. A 10% margin is recommended for the shunt voltage (45 mVp).

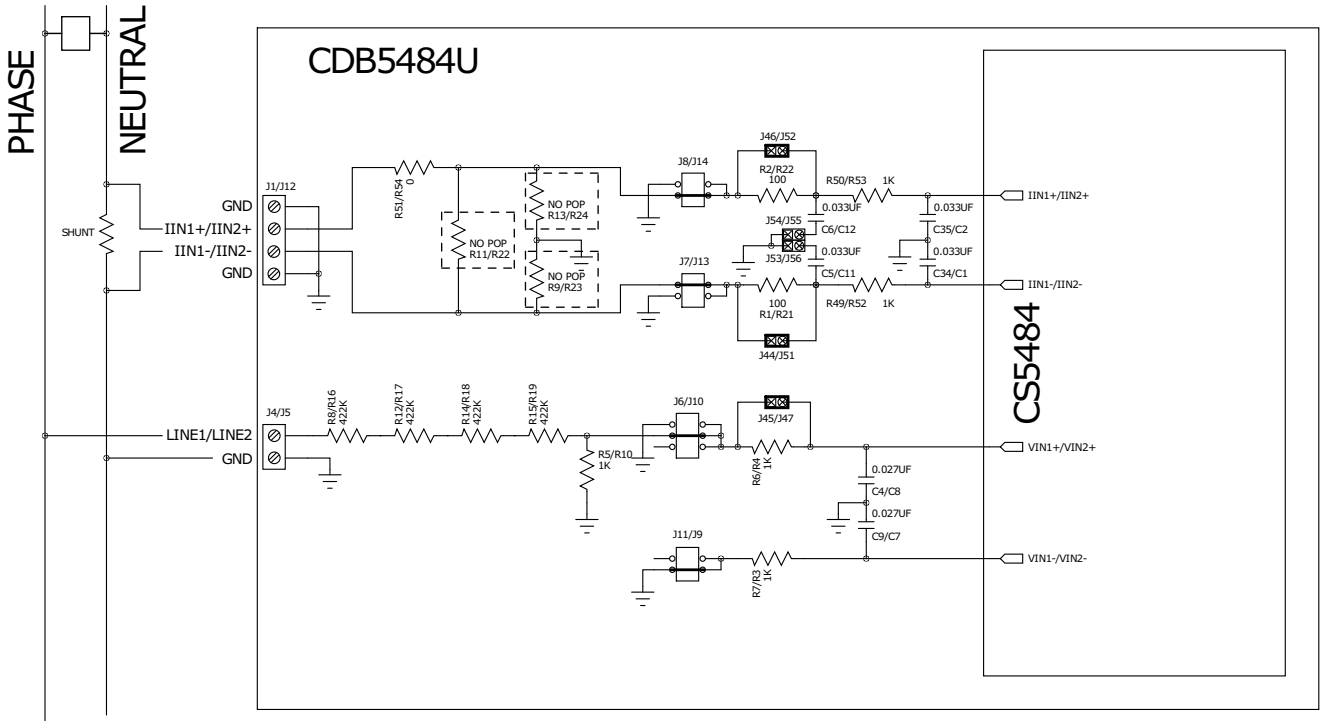

Figure 6. Shunt Sensor Power Meter

1.6.2 Current Transformer Power Meter Example

A slightly more expensive option is to use a current transformer (CT) to connect the AC current to the CDB5484U evaluation board. Figure 7 depicts the voltage and current connections for a CT sensor and its associated filter configurations.

NEVER "open circuit" a CT. Make sure that all signals are well connected before the power source is turned on. Extreme care should be taken when connecting high-voltage signals to the CDB5484U evaluation board.

The burden resistor (R11/R22) is necessary in a CT application to convert the secondary current into voltage. Knowledge of the current transformers turns ratio (N) is key to determining the proper CS5484 input voltage (V_{burden}) that the meter places on the system. The optimum secondary voltage (V_{burden}) at the maximum current input should be 10% less than the maximum channel voltage of 250 mVp with I-channel PGA = 10x. The secondary voltage (V_{burden}) is determined by converting the primary current to the secondary current. Then the secondary current (I_{burden}) can be converted into a voltage by Ohm's Law.

$$V_{burden} = I_{burden} \times R_{burden} = \frac{I_{primary}}{N} \times R_{burden}$$

The secondary voltage (V_{burden}) is sourced to the CS5484 through a simple low-pass, anti-alias filter, and this voltage should not exceed the 250 mVp.

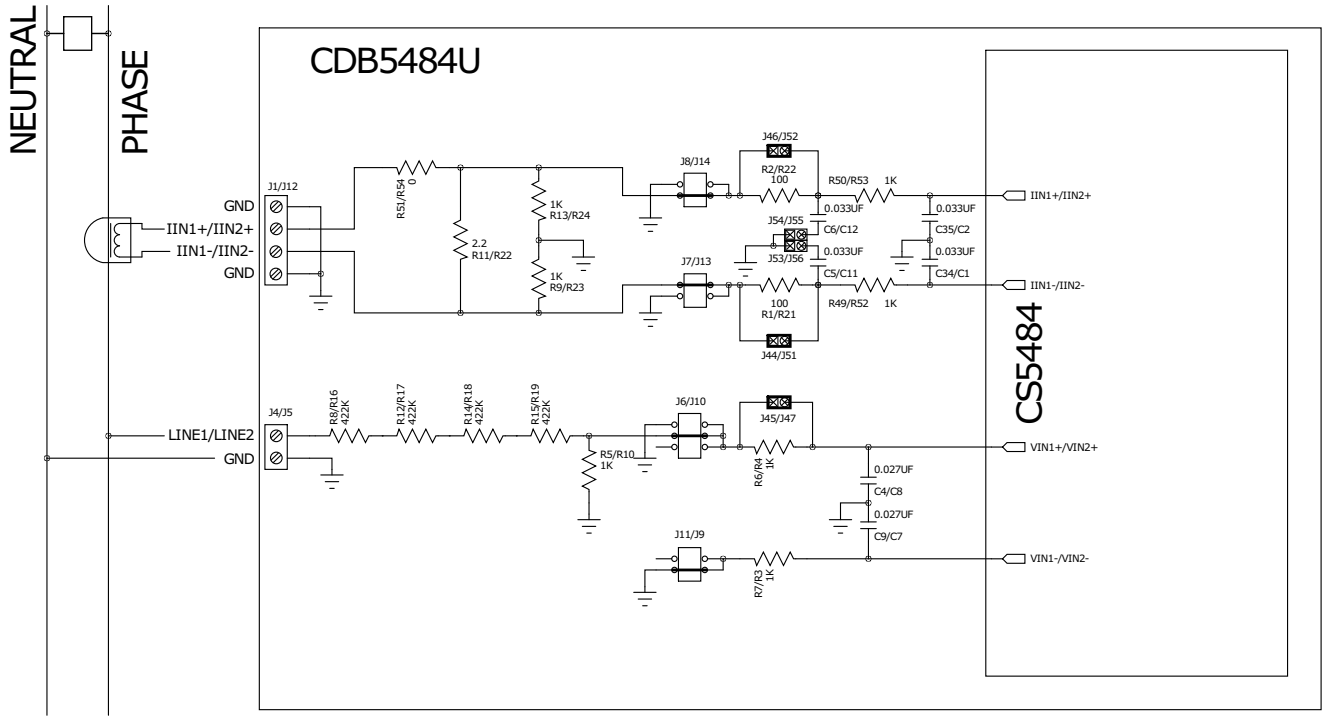

Figure 7. Current Transformer Power Meter

1.6.3 Rogowski Coil Power Meter Example

Rogowski coil power meter can be connected to the CDB5484U evaluation board. Figure 8 shows the voltage and current connections for the Rogowski sensor and its associated filter configurations.

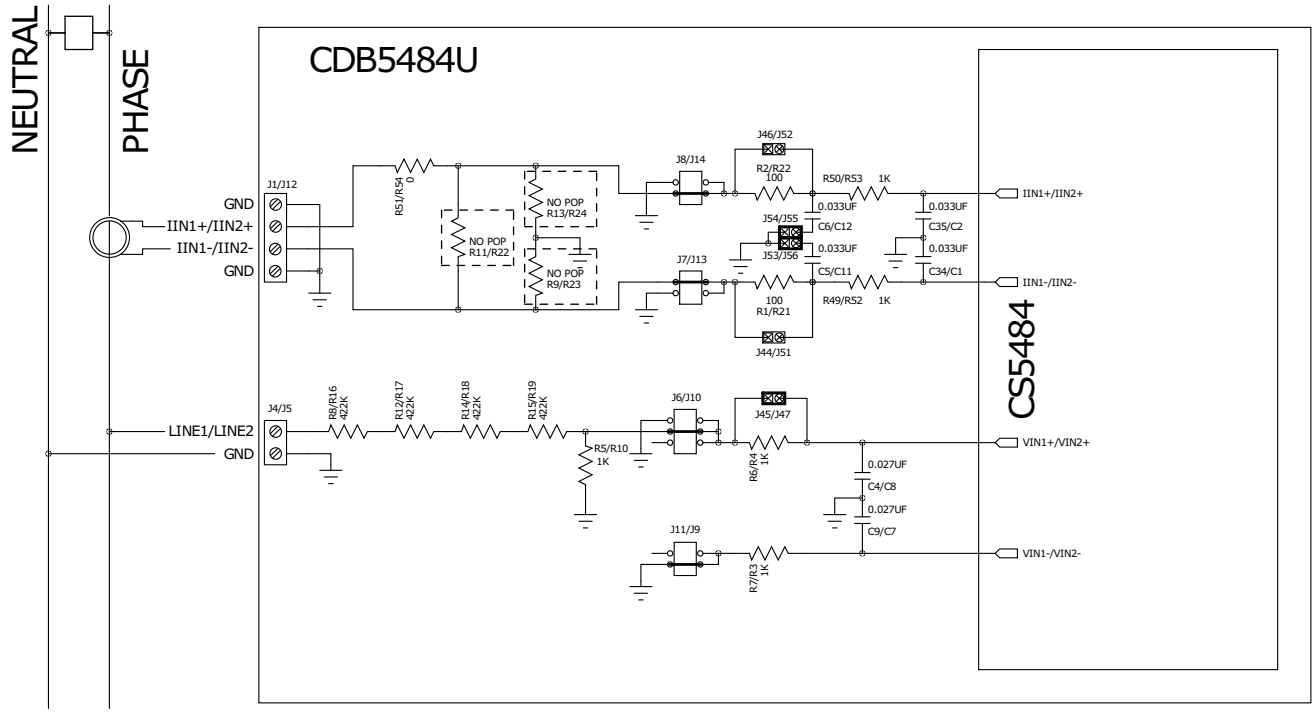

Figure 8. Rogowski Coil Power Meter

For more information, see AN365: *Using the CS5480/84/90 Energy Measurement IC with Rogowski Coil Current Sensors*.

1.7 Standalone Meter Application

The CDB5484U evaluation board provides a standalone power meter using the CS5484, MCU, and LCD. The user can enable the power meter by connecting the sensors to the analog inputs, providing power to the board, and resetting the MCU by pressing the *RESET* switch. Refer to “Typical Sensor Connections” on page 12 for details on the sensor connections and “Power Supply Section” on page 11 for details on supply options.

The user should not use the GUI to connect the CDB5484U board. Once the GUI is connected to the CDB5484U board the standalone power meter function is disabled and the LCD on the CDB5484U will read "Cirrus Logic CS5484 Eval GUI". To re-enable the standalone power meter feature, close the GUI software. The standalone power meter feature will initially show the voltage channels’ RMS register values:

V1rms = N.NNNNN and V2rms = N.NNNNN.

By clicking the onboard switch S2, the standalone power meter will display the following measurement results:

1. RMS Voltage
2. RMS Current
3. Average Active Power
4. Average Reactive Power
5. Average Apparent Power
6. Power Factors
7. Total Active Power
8. Total Reactive Power
9. Total Apparent Power
10. Fundamental Frequency
11. CS5484 Die Temperature

Figure 9. Standalone Power Meter Measurements

2. SOFTWARE

The evaluation board comes with software and a USB cable to link the evaluation board to the PC. The evaluation software was developed with LabWindows®/CVI®, a software development package from National Instruments. The evaluation software is designed to run with Windows XP™ and Windows 7™. The following procedure is based on Windows XP.

2.1 Installation Procedure

Follow the steps below to install the GUI:

1. Access the following web site: http://www.cirrus.com/en/support.
2. Navigate to the **CDB5484U** software link under Energy Measurement. The Software License web page is displayed.
3. To agree with the terms and conditions, click the **Agree** button. The File Download window is displayed.
4. Click the **Save** button. The Save As window is displayed.
5. Select a location to store the compressed folder.
6. Click the **Save** button. The Download complete window is displayed.
7. Click the **Open Folder** button. The location where the compressed folder is stored is displayed.
8. Right-click on the compressed folder, and click **Extract All**.
9. Select a location to extract the files.
10. Navigate to the location where the extracted files are stored and double-click on the **setup.exe** file.
11. Click the **Install** button, and follow the installation instructions.
12. Execute the GUI using Section 2.1.1 *Executing the GUI*.

2.1.1 Executing the GUI

1. From the Start menu, click **All Programs**.
2. Click **Cirrus Energy Measurement Evaluation (CDB5484U)**.
3. Click **CDB5484U**. The GUI is launched.

2.2 Using the Software

Before launching the software, check all jumper settings on the CDB5484U evaluation board, as described in “Evaluation Board Overview” on page 5, and connect the board to an open USB port on the PC using the provided cable. Once the board is powered on, the software program can be launched.

2.3 Start-up Window

When the software is launched, the Start-Up Window is displayed. This window contains information about the software, including its title, revision number, and copyright date. The Start-Up Window is displayed in Figure 10.

Figure 10. GUI Start-up Window

A menu bar at the top displays four items: *System*, *Cirrus Test*, *Connect*, and *Quit*. Initially *System* and *Cirrus Test* are disabled. After establishing a link to a data source, the *System* and *Cirrus Test* items will become available.

2.4 *Connect* Menu

The *Connect* menu allows the user to establish a USB communication link with the CDB5484U board. After the USB communication has been established, the CS5484 serial port configuration needs to be entered according to the position of jumper J16. Connecting to the CDB5484 is a two-step process:

1. Use the “USB Item” to connect to the MCU.
2. Use the “CS5484 Serial Port Config Item” to connect the MCU to the CS5484.

2.4.1 USB Item

In the *Connect* menu, the USB item allows the user to establish USB communication. If the USB item in the *Connect* menu is selected, the evaluation software will poll the C8051F342 microcontroller, verifying the serial communication link is ready. When the Connect to the CDB board window is displayed (see Figure 11), the user should reset the CDB5484 using switch (S1) on the board, wait for Windows to rec-

ognize the MCU (typically 3 seconds), and then select "OK."

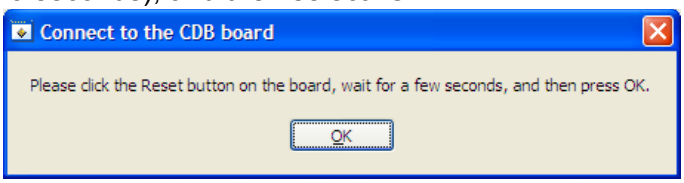

Figure 11. Connect to the CDB board Window

At this point, the *USB* menu item is checked, indicating that the PC has successfully communicated with the CDB5484U evaluation board. The micro-code version information are read from the board and displayed on the screen (see Figure 12). Due to improvements to the software or new features being added, the version displayed may be different than the image shown here.

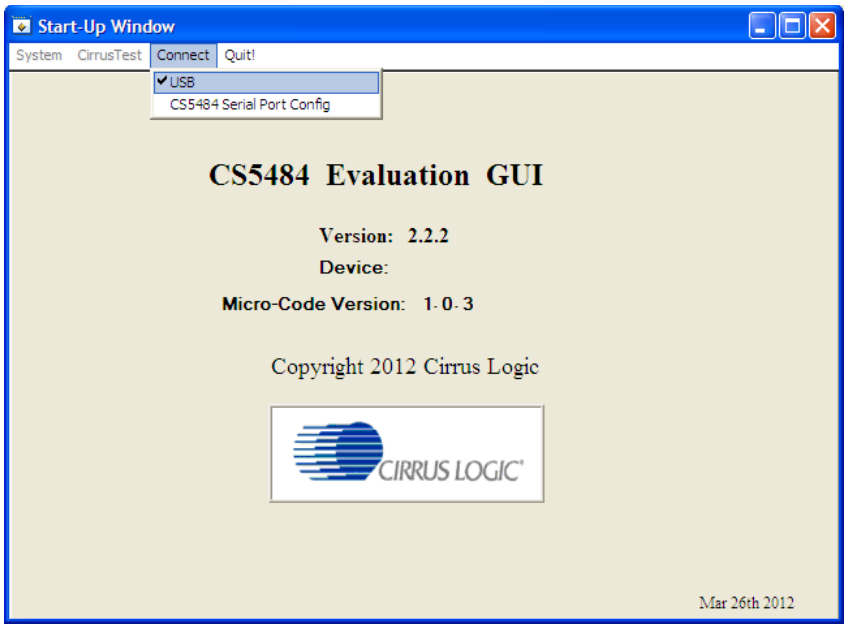

Figure 12. *Connect* Menu Showing Successful USB Connection

If the evaluation software is unable to establish a communication link with the CDB5484U board, a message is displayed, indicating that the initial communication has failed (see Figure 13).

Figure 13. USB Error Message

Check to verify that the USB cable is connected properly and the power supply is on and connected properly to the CDB5484U. Reset the board (press the *RESET* button on the board) and try to set up the USB connection again.

2.4.2 CS5484 Serial Port Config Item

In the *Connect* menu, the *CS5484 Serial Port Config* item allows the user to select different types of serial communication — UART or SPI (see Figure 14).

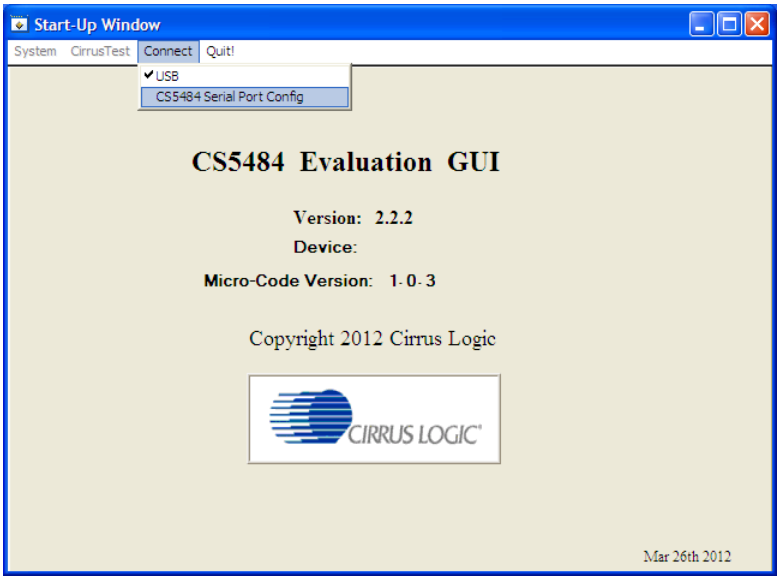

Figure 14. *Connect* Menu Showing Serial Connection Options

Before the software is configured, it is necessary to set jumper J16 on the CDB5464U board to either the UART or SPI communication. To select UART communication, install jumper J16 in the *SSEL to UART* position. To select SPI communication install jumper J16 in the *SSEL to SPI* position.

To select UART communications, position jumper J16 to the *SSEL to UART* position, and select *UART* in the Serial Port Selection window (see Figure 15).

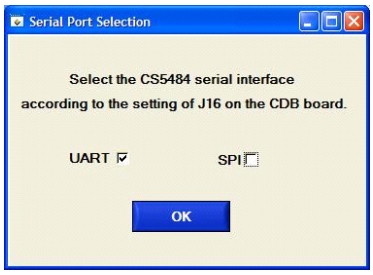

Figure 15. UART Serial Port Selection Window, UART Selected

To select SPI communications, position jumper J16 to the *SSEL to SPI* position, and select *SPI* in the Serial Port Selection window (see Figure 16).

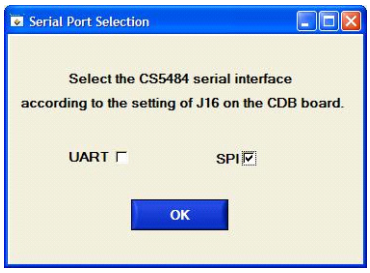

Figure 16. SPI Serial Port Selection Window, SPI Selected

After the serial port has been selected, press the OK button. The MCU will try to read the chip ID from the CS5484. The chip revision number will be displayed in the *Device* field in the Start-Up Window. If the *Device* field is populated with "Unknown CHIP ID", the user should check the power supply and clock to the CS5484, *MODE* jumper J15, *SSEL* jumper J16, and the isolation jumpers J18, J51, and J20, click the *RESET* button, and go back to the USB connection process.

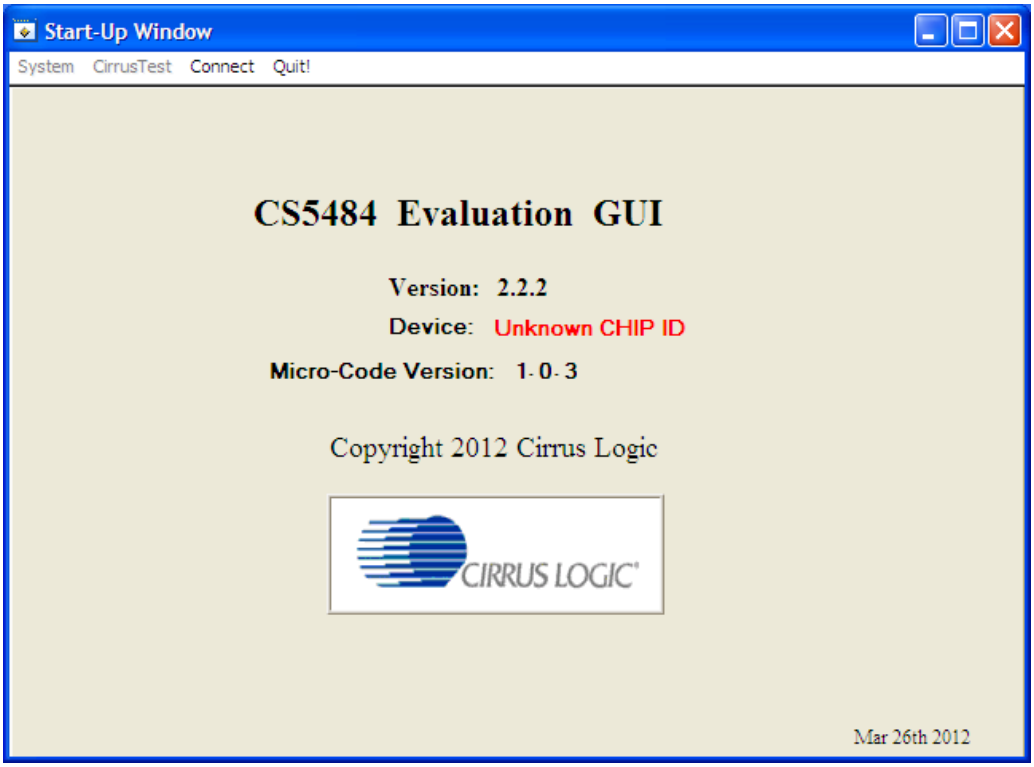

Figure 17. Unknown Chip ID Error Message

2.5 *System* Menu

The *System* pull-down provides three options: *Setup CS5484*, *Calibration*, and *Conversion*. Each window provides a means to evaluate the different functions and performance of the CS5484 (see Figure 18).

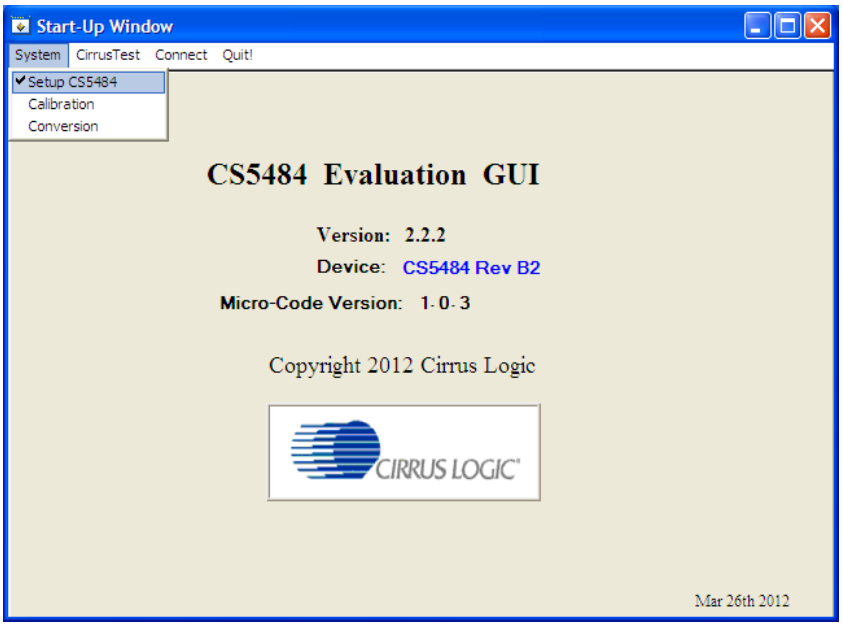

Figure 18. *System* Pull-down Options

2.5.1 Setup Window

The evaluation software provides access to the common CS5484's internal registers through the Setup Window (see Figure 19). The user can access the Setup Window by selecting the *Setup CS5484* item from the *System* menu.

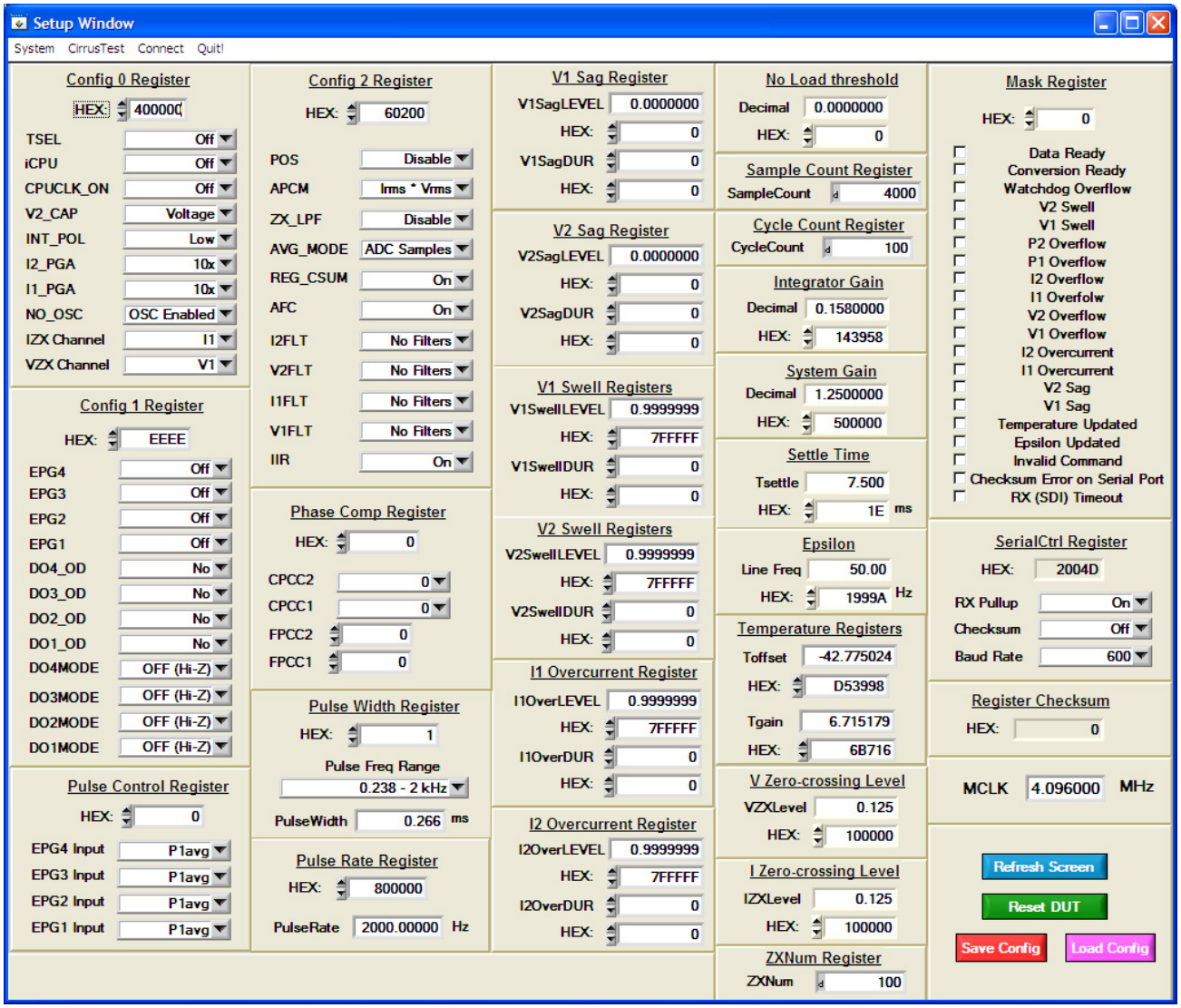

Figure 19. *Setup* Window

The Setup Window displays all of the common CS5484 registers in hexadecimal notation and are decoded to provide easier readability. Refer to the CS5484 data sheet for information on register functionality and definitions. The Setup Window is segmented by function. Each subsection may contain more than one CS5484 register in order to configure a particular function. Updating the hexadecimal value of a register will change the definitions display according to the new hexadecimal value of the register(s). Likewise, updating the definitions displayed from the list boxes will update the hexadecimal value(s) of the associated register(s).

2.5.1.1 Refresh Screen Button

Clicking the *Refresh Screen* button will update the contents of the screen by reading all the register values from the CS5484. It is recommended to click the *Refresh Screen* button when entering the Setup Window, or after modifying any registers, to reflect the current status of the CS5484.

2.5.1.2 Reset DUT Button

Clicking the *Reset DUT* button will software-reset the CS5484. The CS5484 will perform a software-reset, as discussed in the CS5484 data sheet. After the software-reset, the screen contents will be automatically refreshed with the updated status of the CS5484.

2.5.1.3 Save Config and Load Config Buttons

Clicking the *Save Config* button will save the current setup widow's configuration to a .txt file. Clicking the *Load Config* button will recall a saved configuration and store values into the CS5484.

2.5.1.4 CS5484 MCLK Frequency

The CS5484 accepts a wide range of MCLK input frequencies and can therefore run at many different sample rates. The frequency being used on the CS5484 should be entered in this box to provide accurate frequency calculation in the FFT window. This will also help the software decide which functions the evaluation system can perform reliably.

2.5.1.5 Configuration Registers

In the *Config0*, *Config1*, and *Config2* register boxes, the contents of the CS5484's configuration registers can be modified by typing a hexadecimal value in the *HEX* field, or by changing any of the values below the *HEX* field to the desired settings. Although the CDB5484U software allows the user to modify any of the bits in the configuration registers, changing certain reserved bits, such as the NO_OSC bit of *Config0*, may cause the software and board to behave erratically. This applies only to the CDB5484U evaluation system, and not to the CS5484 chip itself.

2.5.1.6 Pulse Control Register

The *Pulse Control Register* section is used to make changes to, and display the contents of, the CS5484's *PulseCtrl* register. The *PulseCtrl* register contains various bits used to select the input to each energy pulse generation block within the CS5484. Refer to the CS5484 data sheet for descriptions of the bits. The value of the *PulseCtrl* register is displayed in hexadecimal format. Most of the *PulseCtrl* register bits are reserved or unused. Only the usable bits are displayed in the Setup Window.

2.5.1.7 Pulse Width and Pulse Rate Registers

The *Pulse Width Register* section is used to make changes to and display the contents of the CS5484's *PulseWidth* register. The *PulseWidth* register is used to define the frequency range and pulse width of the energy pulses generated by the CS5484. The *PulseWidth* register should be configured before setting the *PulseRate* register. The *Pulse Rate Register* section is used to make changes to and display the contents of the CS5484's *PulseRate* register. The *PulseRate* register defines the full-scale frequency of the energy pulses generated by the CS5484.

2.5.1.8 Phase Compensation

The *Phase Comp Register* section is used to make changes to, and display the contents of, the CS5484's *PC* (Phase Compensation Control) register. The *PC* register allows coarse- and fine-phase adjustment on each channel of the CS5484 data path. Refer to the CS5484 data sheet for descriptions of the *PC* register bits.

2.5.1.9 Integrator Gain, System Gain

The *Integrator Gain* and *System Gain* sections display the signal path gain in both hexadecimal and decimal format. Each register can be modified by typing a value in the corresponding *Decimal* or *HEX* field.

2.5.1.10 Sample Count, Cycle Count, Settle Time

The *Sample Count Register*, *Cycle Count Register*, and *Settle Time* sections provide fields to display the values of registers associated with low-rate calculations. The *SampleCount* and *CycleCount* registers are entered or displayed in decimal format by default. The user may select to enter or view other number formats of the register by selecting the "d" within the field. The value of the T_{Settle} register is displayed in both hexadecimal and decimal format. Each register can be modified by typing a value in the corresponding field.

2.5.1.11 Epsilon

The *Epsilon* section is used to display and adjust the *Epsilon* register (the ratio of the AC line frequency to the output word rate). The *Epsilon* register can be updated either through entering the AC line frequency in the *Line Freq* field or by entering the direct register value in the *HEX* field.

2.5.1.12 ZX_{NUM}

When Automatic Frequency Update is enabled, the ZX_{NUM} section is used to adjust the number of zero crossings used in the Epsilon calculation. The update rate of *Epsilon* is increased by reducing the zero crossings. The register can be modified by typing the number of zero crossings.

2.5.1.13 Mask Register

The *Mask Register* box displays the value for the *Mask* register in hexadecimal and decodes them to indicate each bit's function. The *Mask* register can be modified by typing a value in the *HEX* field, or by checking the appropriate boxes for the bits that are to be masked. The value present in the *Mask* register may be changed by the GUI software during certain operations to provide correct functionality of the CDB5484U board.

2.5.1.14 Temperature Registers

The *Temperature Registers* box is used to adjust the temperature offset register (T_{OFF}) and temperature gain register (T_{GAIN}) to convert the temperature register (T) from the Celsius scale to the Fahrenheit scale, or vice versa, and to improve temperature measurement accuracy. Refer to the CS5484 data sheet for the details of the on-chip temperature sensor.

2.5.1.15 V/I Zero-crossing Level and No Load Threshold

The *V/I Zero-crossing Level* and *No Load Threshold* boxes display the values for these registers in hexadecimal and decimal. Each register can be modified by typing a value in the corresponding *Decimal* or *HEX* field.

2.5.1.16 V1/V2 Sag, V1/ V2 Swell, and I1/I2 Overcurrent Registers

The registers for voltage sag, voltage swell, and overcurrent are displayed in the *V1 Sag*, *V2 Sag*, *V1 Swell*, *V2 Swell*, *I1 Overcurrent*, and *I2 Overcurrent Register* sections. These sections display the level and duration values of the corresponding registers in both hexadecimal and decimal format. Each register can be modified by typing a value in the corresponding decimal or *HEX* field. Refer to the CS5484 data sheet for detailed descriptions of these registers.

2.5.1.17 Register Checksum, SerialCtrl Registers

The *Register Checksum* and *SerialCtrl Register* boxes provide control and status of critical serial port communication parameters and the register checksum. The *SerialCtrl Register* section provides control over RX pin, baud rate, and enabling checksum protection for serial communication. The *Register Checksum* section provides the calculated checksum of the critical registers inside the CS5484. The register checksum updates automatically after single or continuous conversion has been performed. The *RegChk* and *SerialCtrl* registers are displayed in hexadecimal form. Note that if the opto-couplers are selected as the isolation (J18, J20), the maximum baud rate is 2400.

The baud rate field applies only to UART serial communication and can be changed by the pull-down field. It is recommended to set the baud rate to the highest setting possible. The default setting of 600 baud will cause some GUI functions to overflow the communication buffer and not function correctly.

2.6 Calibration Window

The Calibration Window is used to display and write to the CS5484 offset and gain calibration registers. The user is also able to initiate the CS5484's calibration sequences that are used to set the calibration values. AC offset, DC offset, and gain calibrations can be performed on the voltage channel, the current channel, or both simultaneously. The user should refer to the CS5484 data sheet for more details on calibration (see Figure 20).

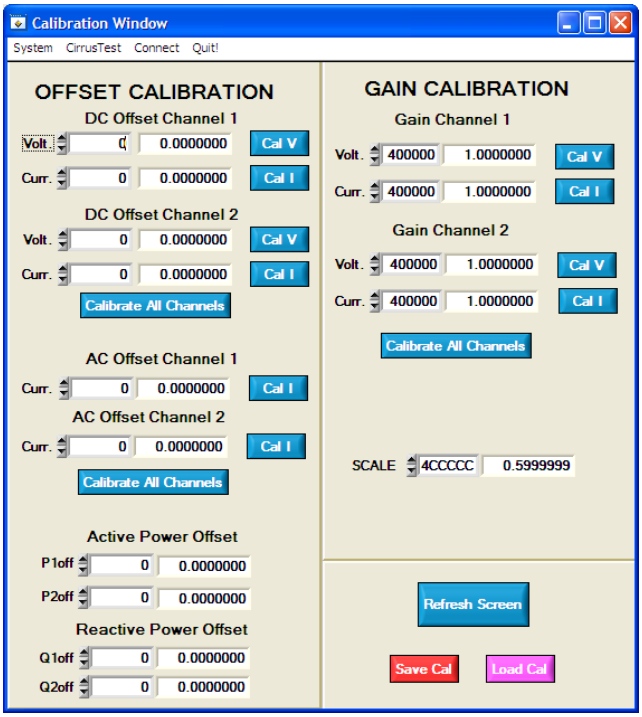

Figure 20. Calibration Window

The *Refresh Screen* button will update the contents of the screen by reading all the register values from the part. It is recommended to click the *Refresh Screen* button when entering the Calibration Window, or after modifying any registers to reflect the current status of the CS5484.

2.6.1 Save Cal and Load Cal Buttons

Clicking the *Save Cal* button will save the calibration widow's configuration to a .txt file. Clicking the *Load Cal* button will recall a saved configuration and store values into the CS5484.

2.6.2 Offset/Gain Register

In the *Offset* and *Gain Calibration* boxes, the offset and gain registers for all channels are displayed in hexadecimal and decimal formats. These registers can be modified directly by typing the desired value in the display boxes. There are three types of offset registers: DC offset, AC offset, and power offset. The AC offset registers only affect the RMS register values. The active and reactive power offset registers only affect the active and reactive power register values, respectively. The DC, AC, and power offset registers are two's complement numbers whose values range from -1 to +1. The gain register value ranges from 0 to 4.

2.6.3 Performing Calibrations

AC/DC offset and gain calibrations can be performed on both the voltage and current channels of the CS5484. It is recommended to software-reset the CS5484 before running calibrations because the initial values in the calibration registers will affect the results of the calibration. A software-reset will reset these registers back to the default values of zero offset and unity gain. AC/DC offset calibration should be performed before gain calibration to ensure accurate results.

2.6.3.1 Offset Calibrations

1. Ground the channel(s) that need to be calibrated directly at the channel header(s), J6, J10, J11, and J9 for the voltage channels and J7, J8, J13, and J14 for the current channels. The channel(s) could also be grounded directly at the screw-type terminals.
2. Press the corresponding AC or DC offset calibrate button (*Cal V*, *Cal I*, or *Calibrate All Channels*) in the corresponding *Offset Calibration* box(es).
3. The offset register value(s) will automatically update when the calibration is completed.

2.6.3.2 Gain Calibrations

1. Attach an AC or DC calibration signal to the screw-type terminals, and make sure the corresponding channel headers (J6, J7, J8, J9, J10, J11, J13, and J14) are set to the desired input position.
2. Press the corresponding gain calibrate button (*Cal V*, *Cal I*, or *Calibrate All Channels*) in the corresponding *Gain Calibration* box(es).
3. The gain register value(s) will automatically update when the calibration is completed.

The *Calibration* window also contains the *Active* and *Reactive Power Offset Register 1* and *Register 2* display and adjustment. The user can read and write the values in the CS5484 active and reactive power offset registers ($P1_{OFF}$, $P2_{OFF}$, $Q1_{OFF}$, and $Q2_{OFF}$).

2.7 *Conversion* Window

The Conversion Window allows the user to see the results of single and continuous conversions and the CS5484 status, perform data averaging, and use the power-saving modes of the CS5484. The Conversion Window can be accessed from the *System* pull-down menu, *Conversion* menu item. The Conversion Window provides the active, apparent, and reactive energy calculation register results for each channel. In addition, the RMS, power factor, and peak signal amplitudes for each analog-to-digital converter channel, chip temperature (when temperature measurement function is enabled), AC line frequency (converted from the *Epsilon* register), and the values of each status register (*Status0, 1, 2*) are also displayed. The Conversion Window also provides the total active, apparent, and reactive power register results.

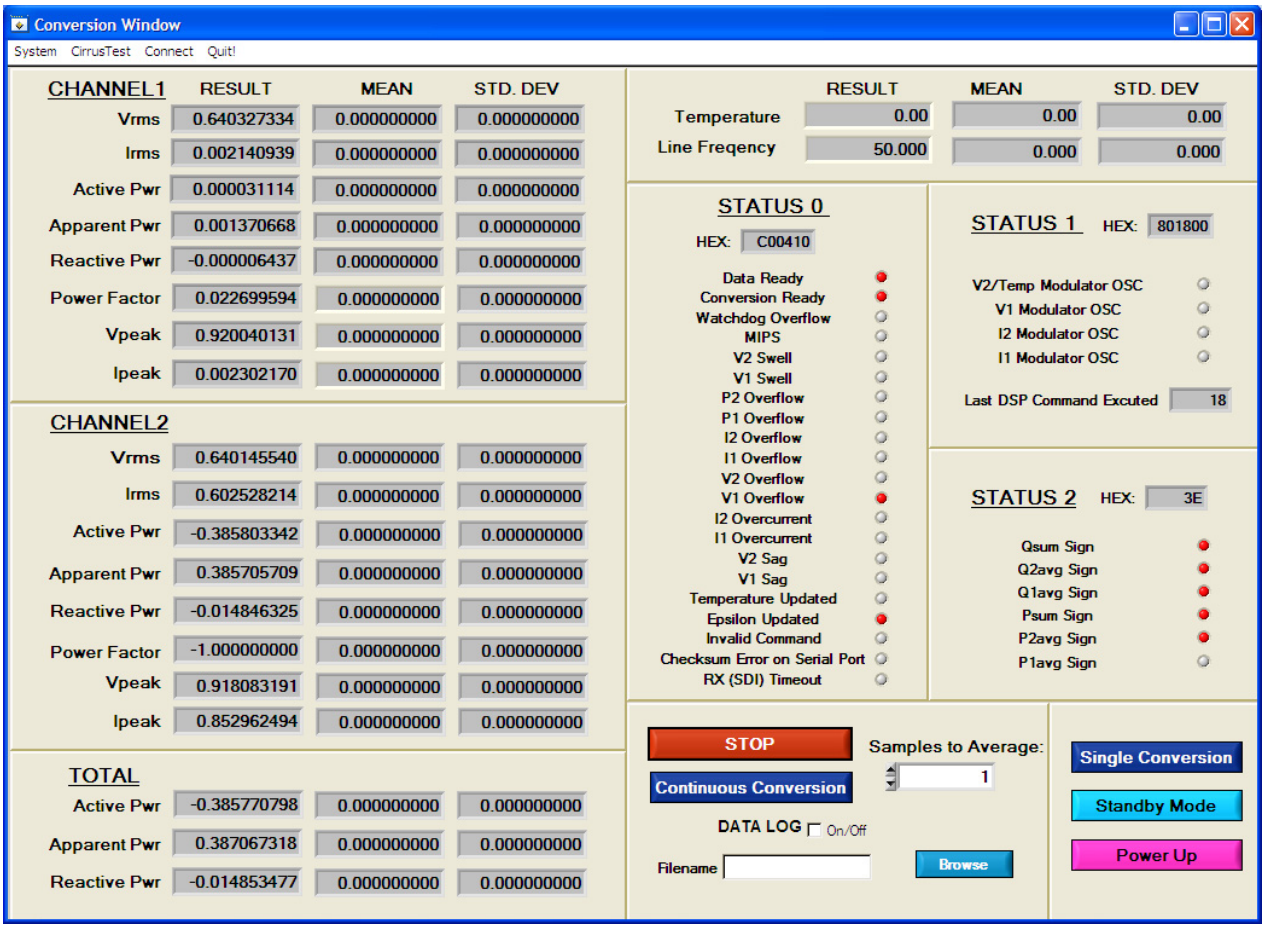

Figure 21. Conversion Window

2.7.1 Single Conversion Button

Clicking the *Single Conversion* button will cause a single conversion to be performed. After a single conversion is complete, the *Result* column will be updated with the values present in each data register.

2.7.2 Continuous Conversion Button

Clicking this button will cause continuous conversions to be performed until the user clicks the *Stop* button. After each conversion is complete, the *Result* column will be updated with the values present in each data register. The *Mean* and *STD. DEV* columns will be updated every N cycle, where N is the number in the *Samples to Average* field. The user should stop continuous conversion before navigating away from

this window. The *Continuous Conversion* button should not be used with BAUD rates less than 1200 Hz in UART mode. Using lower BAUD rates (including the default 600 baud) will result in overflowing the communication buffer and cause other window errors, communication failure, or both.

Data logging can be enabled using the *DATALOG* On/Off check box and *Filename* field.

2.7.3 Standby Mode Button

When this button is pressed, the CS5484 will enter a standby power-saving mode. To return to normal mode, press the *Power Up* button. The user should power up the device before leaving this window.

2.7.4 Power Up Button

The *Power Up* button is used to send the wake-up command to the CS5484. The CS5484 will return to normal operating mode.

2.7.5 Line Frequency Result

When the AFC bit in the *Config2* register is set, the *Epsilon* register will be calculated automatically by the CS5484, and the *Line Frequency* fields will be updated automatically in continuous conversion mode. If the AFC bit in the *Config2* register is not set and the line frequency is other than the default value (50 Hz), the line frequency must be set manually here to make *Epsilon* be the ratio of line frequency to the output word rate (OWR). This ensures the accuracy of the quadrature power (*Q1*, *Q2*) and the reactive power ($Q1_{AVG}$ and $Q2_{AVG}$) calculations. Refer to the CS5484 data sheet for more details.

2.7.6 Temperature Result

When the on-chip temperature sensor is enabled, the *Temperature* fields will display in the top right corner of the Conversion Window.

2.7.7 Samples to Average

The *Samples to Average* field allows the user to average a number of measurement results.

2.8 Cirrus Test Window

The *Cirrus Test* pull-down menu provides three options: *Test and Debug*, *ADC Data Collection*, and *ADC Data Collection to File*. Each window provides a means to evaluate the different functions and performance of the CS5484 (see Figure 22).

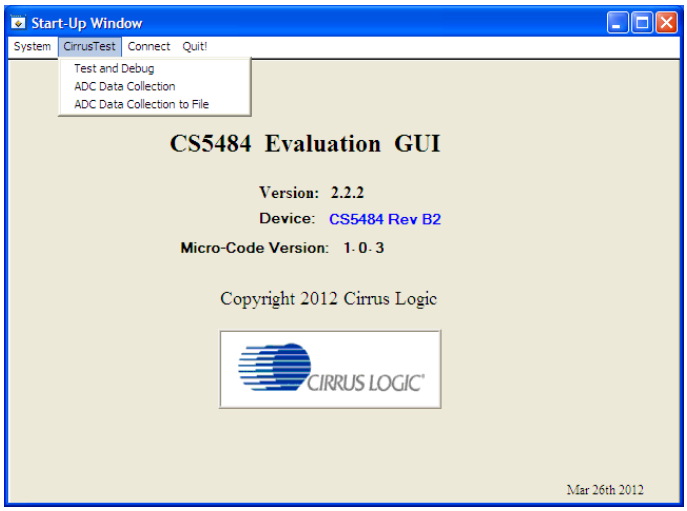

Figure 22. *Cirrus Test* Pull-down Options

2.8.1 Data Collection Window

The *Data Collection* window allows the user to collect sample sets of data from the CS5484 and analyze them using time domain, FFT, and histogram plots. The *Data Collection* window can be accessed by pulling down the *CirrusTest* menu, and selecting the *ADC Data Collection* item (see Figure 23).

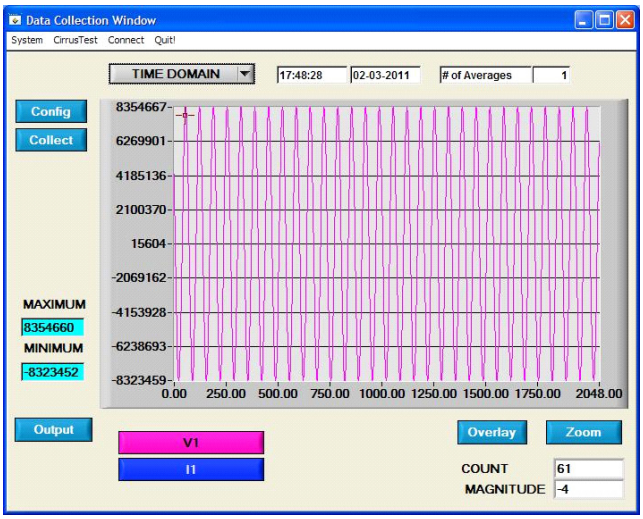

Figure 23. Data Collection Window

The Data Collection Window can only be accessed when operating in SPI mode. When UART serial communication is enabled, an error window will be displayed (see Figure 24). To enable SPI, refer to “Serial Port Selection” on page 9.

Figure 24. Data Collection UART Error Message

2.8.1.1 Time Domain/FFT/Histogram Selector

The *Time Domain/FFT/Histogram* selector selects the type of data processing to perform on the collected data and displays the results in the plot area. Refer to “Analyzing Data” on page 32 for more information.

2.8.1.2 Config Button

The *Config* button will bring up the *Configuration* window, which allows the user to modify the data collection specifications. Refer to “Configuration Window” on page 31 for more information.

2.8.1.3 Collect Button

The *Collect* button will collect data from the part to be analyzed in the plot area (see “Collecting Data Sets” on page 32 for more information).

2.8.1.4 Output Button

The *Output* button will bring up a window in which the user can output the data to a file for later use, print out a plot, or print out the entire screen. When saving data, only the data channel being displayed on the plot will be saved to a file.

2.8.1.5 Zoom Button

The *Zoom* button allows the user to zoom in on the plot by selecting two points in the plot area. Press the *Restore* button to return to the normal data plot, or press the *Zoom* button again to zoom in further.

2.8.1.6 Channel Select Button

After data collection, the two buttons labeled as “No Data" will be replaced with *Current* and *Voltage* buttons, allowing the user to choose the appropriate channel for display. In the time domain mode, an additional *Overlay* button will be present, which allows the user to display all the channels on the same plot.

2.8.1.7 Output Button and Window

The *Output* button allows the user to:

1. Output Time Domain File
2. Output FFT File
3. Output Histogram
4. Print Screen
5. Print Graph

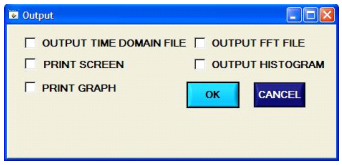

Figure 25. Data Collection *Output* Window

2.8.1.8 Configuration Window

The Configuration window allows the user to set up the data collection and analysis parameters (see Figure 26).

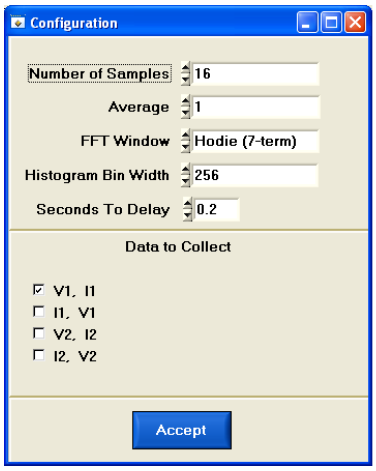

Figure 26. Data Collection *Configuration* Window

2.8.1.8.1 Number of Samples

The *Number of Samples* field allows the user to select the number of samples to collect, between 16 and 524,288.

2.8.1.8.2 Average

When performing FFT analyses, the *Average* field determines the number of FFTs to average. FFTs will be collected and averaged when the *Collect* button is clicked.

2.8.1.8.3 FFT Window

The *FFT Window* box allows the user to select the type of windowing algorithm for FFT processing. Windowing algorithms include the Blackman, Blackman-Harris, Hanning, 5-term Hodie, and 7-term Hodie. The 5-term Hodie and 7-term Hodie are windowing algorithms developed at Crystal Semiconductor, now called Cirrus Logic.

2.8.1.8.4 Histogram Bin Width

This field determines the "bin width" when plotting histograms of the collected data. Each vertical bar in the histogram plot will contain the number of output codes entered in this field. Increasing this number may allow the user to view histograms with larger input ranges.

2.8.1.8.5 Seconds to Delay

This field specifies the amount of time the system waits to begin data collection after the CS5484 starts continuous conversions.

2.8.1.8.6 Data to Collect

The *Data to Collect* check boxes allow the user to select the data types that will be collected and returned to the PC for processing.

2.8.1.8.7 Accept Button

When the *Accept* button is clicked, the current settings will be saved, and the user will return to the *Data Collection* window.

2.8.1.9 Collecting Data Sets

To collect a sample data set:

1. In the *Data Collection* window, click the *Config* button to bring up the *Configuration* window and view the current settings.
2. Select the appropriate settings from the available options (see “Configuration Window” on page 31) and press the *Accept* button.
3. The *Data Collection* window should still be visible. Press the *Collect* button to begin collecting data.
4. Once the data has been collected, it can be analyzed, printed, or saved to disk.

2.8.1.10 Analyzing Data

The evaluation software provides three types of analysis tests: Time Domain, Frequency Domain, and Histogram. The time domain analysis processes acquired conversions to produce a plot of magnitude versus conversion sample number. The frequency domain analysis processes acquired conversions to produce a plot of magnitude versus frequency using the Fast-Fourier transform (results up to Fs/2 are calculated and plotted). Also statistical noise calculations are calculated and displayed. The histogram analysis processes acquired conversions to produce a histogram plot. Statistical noise calculations are also calculated and displayed.

2.8.1.11 Histogram Information

The following is a description of the indicators associated with histogram analysis. Histograms can be plotted in the *Data Collection* window by setting the analysis type pull-down menu to *Histogram*. See Figure 27. The histogram plot information includes:

- BIN: Displays the x-axis value of the cursor on the histogram.
- MAGNITUDE: Displays the y-axis value of the cursor on the histogram.
- MEAN: Indicates the mean of the data sample set. The mean is calculated using the following formula:

$$\text{Mean} = \frac{\sum_{i=0}^{n-1} X_i}{n}$$

- STD_DEV: Indicates the standard deviation of the collected data set. The standard deviation is calculated using the following formula:

$$\text{STDDEV} = \sqrt{\frac{\sum_{i=0}^{n-1} (X_i - \text{Mean})^2}{n}}$$

- VARIANCE: Indicates the variance of the current data set. The variance is calculated using the following formula:

$$\text{Variance} = \frac{\sum_{i=0}^{n-1} (X_i - \text{Mean})^2}{n}$$

- MAXIMUM: Indicates the maximum value of the collected data set.
- MINIMUM: Indicates the minimum value of the collected data set.

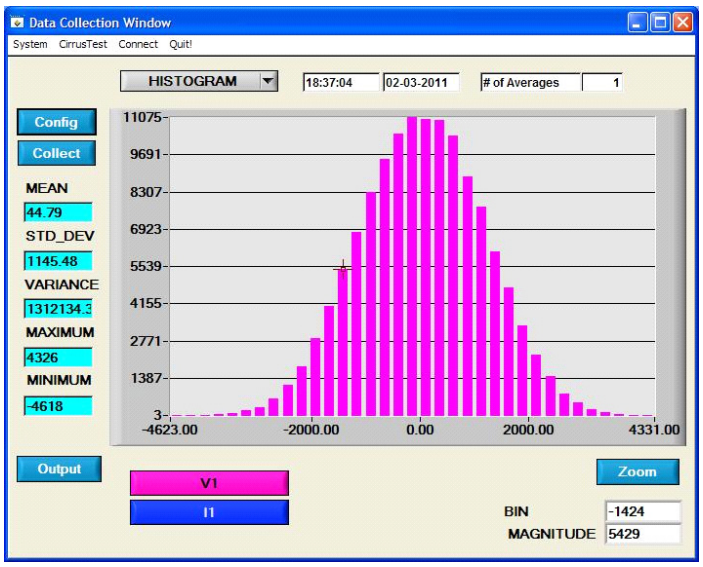

Figure 27. Histogram Analysis

2.8.1.12 Frequency Domain Information

The following describes the indicators associated with FFT (Fast-Fourier Transform) analysis. FFT data can be plotted in the *Data Collection* window by setting the analysis type selector to *FFT*. See Figure 28. The FFT information includes:

- FREQUENCY: Displays the x-axis value of the cursor on the FFT display.
- MAGNITUDE: Displays the y-axis value of the cursor on the FFT display.
- S/PN: Indicates the signal-to-peak noise ratio (decibels).
- SINAD: Indicates the signal-plus-noise-plus-distortion to noise-plus-distortion ratio (decibels).
- S/D: Indicates the signal-to-distortion ratio, 4 harmonics are used in the calculations (decibels).
- SNR: Indicates the signal-to-noise ratio, first 4 harmonics are not included (decibels).
- FS-PdB: Indicates the full-scale to signal Ratio (decibels).

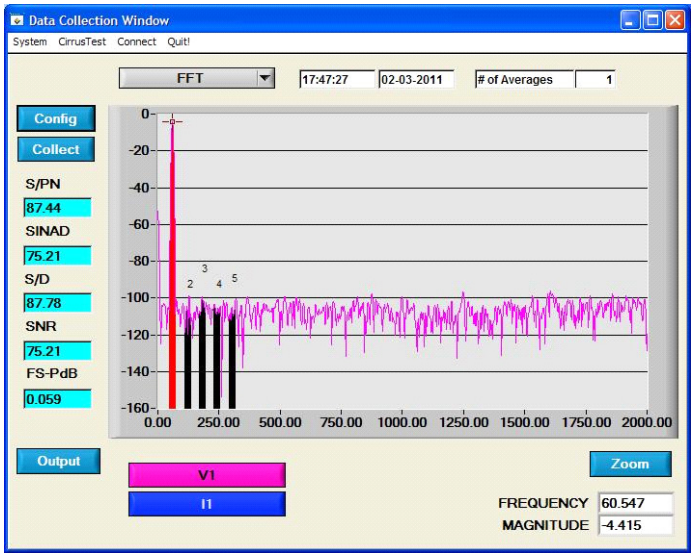

Figure 28. FFT Analysis

2.8.1.13 *Time Domain Information*

The following controls and indicators are associated with time domain analysis. Time domain data can be plotted in the *Data Collection* window by setting the analysis type selector to *Time Domain* (see Figure 29). The time domain plot includes:

- COUNT: Displays current x-position of the cursor on the time domain display.
- MAGNITUDE: Displays current y-position of the cursor on the time domain display.
- MAXIMUM: Indicates the maximum value of the collected data set.
- MINIMUM: Indicates the minimum value of the collected data set.

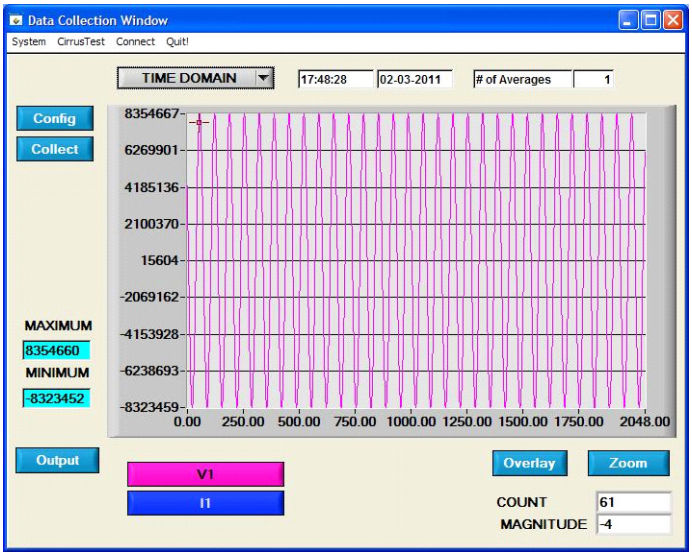

Figure 29. Time Domain Analysis

2.8.2 Data Collection to File Window

The *Data Collection to File* window allows the user to collect instantaneous voltage and current register data over an extended period of time to a data file (see Figure 30). The following steps are necessary for data collection to a file:

1. Provide the *Time to Collect* in seconds.
2. If a delay before data collection is needed, enter the time in seconds for the *Delay*.
3. Select the voltage and current channel 1 (V1,I1) or voltage and current channel 2 (V2,I2).
4. Browse to a directory and enter the file name of the desired file to save.
5. Start the data collection by pressing the *START* button.
6. The data collection status will be provided in *Samples Collected* and *Time Remaining*.
7. The collection will complete without any further interaction by the user, or the user may stop the data collection at any time by pressing the *STOP* button.

Figure 30. Data Collection to File Window

2.8.3 Setup and Test Window

The *Setup and Test* window allows the user a way to access CS5484 registers and send commands to the CS5484 directly (see Figure 31).

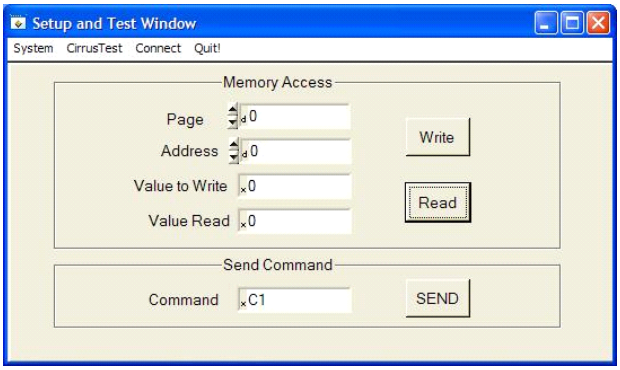

Figure 31. *Setup and Test* Window

There are three types of transactions: Write, Read, and Send. The CS5484 memory is organized by pages. In order to properly write a register it is necessary to set the *Page*, *Address*, and *Value to Write* field and then press the *Write* button. To read a register it is necessary to set the *Page* and *Address* and then press the *Read* button. The register result will be displayed in the *Value Read* field. To send a command to the CS5484, enter the command in the *Command* field and press the *SEND* button. Refer to the CS5484 data sheet for more details on registers and commands.

APPENDIX A. BILL OF MATERIALS

CIRRUS LOGIC
CDB5484U_REV_C.PL

BILL OF MATERIAL

Item	Cirrus P/N	Rev	Description	Qty	Reference Designator	MFG	MFG P/N	Notes	Status
1	001-04187-Z1	A	CAP 0.027uF ±5% 50V X7R NPb 0805	12	C1 C2 C4 C5 C6 C7 C8 C9 C11 C12 C34 C35	KEMET	C0805C273J5RAC		A
2	001-10064-Z1	A	CAP 15pF ±5% 50V C0G NPb 0603	1	C3	KEMET	C0603C150J5GAC		A
3	001-04345-Z1	A	CAP 0.1uF ±10% 50V X7R NPb 0805	2	C10 C31	KEMET	C0805C104K5RAC		A
4	001-01994-Z1	A	CAP 0.01uF ±10% 16V X7R NPb 0603	2	C13 C19	MURATA	GRM188R71C103KA01D		A
5	001-02194-Z1	A	CAP 0.1uF ±10% 25V X7R NPb 0603	3	C14 C15 C16	MURATA	GRM188R71E104KA01D		A
6	001-10226-Z1	A	CAP 1uF ±10% 25V X5R NPb 0603	4	C17 C18 C20 C21	MURATA	GRM188R61E105KA12		A
7	001-02189-Z1	A	CAP 0.1uF ±10% 16V X7R NPb 0603	5	C22 C23 C25 C27 C29	KEMET	C0603C104K4RAC		A
8	012-00010-Z1	A	CAP 47uF ±20% 16V NPb ELEC CASE C	2	C24 C30	PANASONIC	EEE1CA470WR		A
9	001-10127-Z1	A	CAP 22pF ±10% 50V C0G NPb 0603	1	C26	KEMET	C0603C220K5GAC		A
10	001-04523-Z1	A	CAP 1uF ±10% 16V X7R NPb 0805	2	C28 C38	KEMET	C0805C105K4RAC		A
11	001-10233-Z1	A	CAP 4.7uF ±20% 25V X7R NPb 1206	2	C32 C37	TDK	C3216X7R1E475M		A
12	012-00013-Z1	A	CAP 4.7uF ±20% 25V ELEC NPb CASE B	1	C33	PANASONIC	EEE1EA4R7SR		A
13	001-02194-Z1	A	CAP 0.1uF ±10% 25V X7R NPb 0603	1	C36	KEMET	C0603C104K3RAC		A
14	070-00055-Z1	A	DIODE ARRAY 5V (TVS) ESD NPb SOT143	1	D5	LITTELFUSE	SP0503BAHTG		A
15	165-00004-Z2	A	LED SUP RED 100mcd NPb SMD	5	D6 DO1 DO2 DO3 DO4	EVERLIGHT	28-21SRC/TR8		A
16	110-00055-Z1	A	CON TERM BLCK 4 POS 5mm NPb BLU TH	4	J1 J2 J3 J12	ON-SHORE TECHNOLOGY	ED 100/4DS		A
17	110-00056-Z1	A	CON TERM BLOCK 2POS 5mm NPb BLU TH	3	J4 J5 J27	ON-SHORE TECHNOLOGY	ED 100/2DS		A
18	115-00016-Z1	A	HDR 3x2 ML .1"CTR 062 S GLD NPb	2	J6 J10	SAMTEC	TSW-103-07-G-D		A
19	115-00257-Z1	A	HDR 2x2 ML .1" 093BD ST GLD NPb TH	6	J7 J8 J9 J11 J13 J14	SAMTEC	TSW-102-08-G-D		A
20	115-00009-Z1	A	HDR 3x1 ML .1" 062 ST GLD NPb TH	9	J15 J16 J18 J20 J26 J38 J43 J50 J58	SAMTEC	TSW-103-07-G-S		A
21	115-00011-Z1	A	HDR 10x2 ML .1" 062BD ST GLD NPb TH	2	J17 J19	SAMTEC	TSW-110-07-G-D		A
22	115-00014-Z1	A	HDR 2x1 ML .1" 062BD ST GLD NPb TH	18	J21 J23 J39 J40 J41 J42 J44 J45 J46 J47 J48 J49 J51 J52 J53 J54 J55 J56	SAMTEC	TSW-102-07-G-S		A
23	115-00276-Z1	A	HDR 16X1 ML .1" 062 S GLD NPb TH	1	J22	SAMTEC	TSW-116-07-G-S	SOLDER J22 TO PCB AND LCD(U7)	A
24	110-00041-Z1	A	CON RA USB BLK NPb TH	1	J24	AMP	292304-1		A
25	115-00003-Z1	A	HDR 5x2 ML .1"CTR S GLD NPb	1	J25	SAMTEC	TSW-105-07-G-D		A
26	110-00014-Z1	A	CON XLR CHASSIS 3P FML SILV NPb	0	J28 J29 J30 J31	NEUTRIK	NC3FD-H	NO POP	A
27	115-00014-Z1	A	HDR 2x1 ML .1" 062BD ST GLD NPb TH	0	J32 J33 J34 J35	SAMTEC	TSW-102-07-G-S	NO POP	A
28	110-00008-Z1	A	CON BPOST 2" SILV NYLON INS BLK NPb	1	J36	JOHNSON COMPONENTS	111-0103-001	REQUIRES WIRE, 1.5L X 0.25T X 0.25T TYPE E 24/19 BLU SQUIRES ELEC. INC.	A
29	110-00010-Z1	A	CON BPOST 2" SILV NYLON INS RED NPb	1	J37	JOHNSON COMPONENTS	111-0102-001	REQUIRES WIRE, 1.5L X 0.25T X 0.25T TYPE E 24/19 BLU SQUIRES ELEC. INC.	A
30	115-00024-Z1	A	HDR 1x1 ML .1"CTR S NPb GLD	1	J57	SAMTEC	TSW-101-07-G-S		A
31	080-00004-Z1	A	WIRE JUMPER 2P 0.1" BRASS NPb TH	8	JP1 JP2 JP3 JP4 JP5 JP6 JP7 JP8	COMPONENTS CORPORATION	TP-101-10		A
32	304-00022-Z1	A	SPCR STANDOFF NYL HEX 1.0/4-40 NPb	7	MH1 MH2 MH3 MH4 MH5 MH6 MH7	KEYSTONE	1902E	REQUIRES SCREW 4-40X5X16" PH STEEL 300-00025-Z1	A
33	020-01702-Z1	A	RES 100 OHM 1/8W ±1% NPb 0805 FILM	4	R1 R2 R21 R22	DALE	CRCW0805100RFKEA		A
34	020-01816-Z1	A	RES 1k OHM 1/8W ±1% NPb 0805 FILM	10	R3 R4 R5 R6 R7 R10 R49 R50 R52 R53	DALE	CRCW08051K00FKEA		A
35	020-06362-Z1	A	RES 422k OHM 1/4W ±1% NPb 1206	8	R8 R12 R14 R15 R16 R17 R18 R19	DALE	CRCW1206422KFKEA		A

Figure 32. Bill of Materials (Page 1 of 2)

CIRRUS LOGIC
CDB5484U_REV_C.PL

BILL OF MATERIAL

Item	Cirrus P/N	Rev	Description	Qty	Reference Designator	MFG	MFG P/N	Notes	Status
36	020-01816-Z1	A	RES 1k OHM 1/8W ±1% NPb 0805 FILM	0	R9 R13 R23 R24	DALE	CRCW08051K00FKEA	NO POP	A
37	021-00347-Z1	A	RES 2.2 OHM 1/8W ±5% NPb 0805 FILM	0	R11	DALE	CRCW08052R20JNEA	NO POP	A
38	021-01445-Z1	A	RES 2.2 OHM 1/10W ±5% NPb 0603	0	R20	DALE	CRCW06032R20JNEA	NO POP	A
39	021-00407-Z1	A	RES 680 OHM 1/8W ±5% NPb 0805 FILM	5	R25 R26 R27 R28 R48	DALE	CRCW0805680RJNEA		A
40	021-00238-Z1	A	RES 680 OHM 1/10W ±5% NPb 0603 FILM	2	R29 R32	KOA	RK73B1JTTD681J		A
41	021-00259-Z1	A	RES 5.1k OHM 1/10W ±5% NPb 0603 FIL	3	R30 R31 R47	DALE	CRCW06035K10JNEA		A
42	021-00266-Z1	A	RES 10k OHM 1/10W ±5% NPb 0603 FILM	1	R33	DALE	CRCW060310K0JNEA		A
43	020-00673-Z1	A	RES 0 OHM 1/10W ±5% NPb 0603 FILM	10	R34 R35 R36 R37 R38 R39 R40 R41 R42 R43	DALE	CRCW06030000Z0EA		A
44	021-00242-Z1	A	RES 1k OHM 1/10W ±5% NPb 0603 FILM	3	R44 R45 R46	DALE	CRCW06031K00JNEA		A
45	020-01473-Z1	A	RES 0 OHM 1/18W ±1% NPb 0805 FILM	2	R51 R54	DALE	CRCW08050000Z0EA		A
46	020-00914-Z1	A	RES 130 OHM 1/10W ±1% NPb 0603 FILM	1	R55	DALE	CRCW0603130RFKEA		A
47	020-00673-Z1	A	RES 0 OHM 1/10W ±5% NPb 0603 FILM	0	R56	DALE	CRCW06030000Z0EA	NO POP	A
48	021-00718-Z1	A	RES 20 OHM 1/3W ±5% NPb 1210 FILM	1	R57	DALE	CRCW121020R0JNEA		A
49	120-00002-Z1	A	SWT SPST 130G 0/1 5mm TACT ESD NPb	2	S1 S2	ITT INDUSTRIES	PTS645TL50 LFS	INSTALL AFTER WASH PROCESS	A
50	110-00045-Z1	A	CON TEST PT .1"CTR TIN PLAT NPb BLK	10	TP1 TP2 TP3 TP4 TP5 TP6 TP7 TP8 TP9 TP10	KEYSTONE	5001		A
51	065-00332-Z4	B2	IC CRUS BIDIR ENER MEAS NPb QFN28L	1	U1	CIRRUS LOGIC	CS5484-INZ/B2	ECO899, ECO935	A
52	060-00568-Z1	A	IC ISOL 5CH 2.5kV 5/0 NPb SOIC16N	1	U2	SILICON LABORATORIES	Si8450BB-B-IS1		A
53	060-00567-Z1	A	IC ISOL 5CH 2.5kV 4/1 NPb SOIC16N	1	U3	SILICON LABORATORIES	Si8451BB-B-IS1		A
54	175-00031-Z1	A	OPT COUP TRANS 50-600% NPb DIP4	2	U4 U5	TOSHIBA	TLP781(F)		A
55	062-00229-Z1	A	IC PGM USB 64kB FLAS MCU NPb LQFP32	1	U6	SILICON LABORATORIES INC	C8051F342-GQ	PROGRAM AT TEST	A
56	160-00012-Z1	A	LCD MODULE 3.3V 16x2 16x64mm NPb	1	U7	TOPWAY	LMB162AFC-2	NEED HDR16X1-SSW-116-01-G-S, TSW-116-07-G-S, #2 STANDOFF .500 LENGTH, SCREWS	A
57	061-00392-Z1	A	IC DIG DC/DC CONV 5V 1W NPb SMD8	1	U8	V-INFINITY	VBT1-S5-S5-SMT		A
58	060-00319-Z1	A	IC LNR VREG µPWR 150mA NPb SOT23-5	1	U9	NATIONAL SEMICONDUCTOR	LP2985IM5-3.3/NOPB		A
59	100-00120-Z1	A	XTL 4.096MHZ HC49US 30ppm 20pF NPb	1	Y1	ECS	ECS-41-20-4X	INSTALL PIN SOCKETS	A
60	070-00006-Z1	A	DIODE TR 6.8V 600W NPb AXL	2	Z1 Z2	LITTELFUSE	P6KE6.8		A
61	070-00200-Z1	A	DIODE TVS 3.3V 2LN ESD NPb SOT23	1	Z3	COMCHIP TECHNOLOGY	CTES033V3-G	ECO852	A
62	603-00478-Z1	C	ASSY DWG CDB5484U-Z-NPb	REF		CIRRUS LOGIC	603-00478-Z1	ECO852	
63	240-00478-Z1	C	PCB CDB5484U-Z-NPb	1		CIRRUS LOGIC	240-00478-Z1	ECO852	A
64	600-00478-Z1	C2	SCHEM CDB5484U-Z NPb	REF		CIRRUS LOGIC	600-00478-Z1	ECO852, ECO899, ECO935	A
65	422-00013-Z1	D	LBL SUBASSY PRODUCT ID AND REV	1		CIRRUS LOGIC	422-00013-01		A
66	080-00003-Z1	A	WIRE BPOST 1.5X.25 24/19 GA BLU NPb	2	XJ36 XJ37	SQUIRES	L-1.5X.25TX.25T_TYPE_E_		A
67	135-00003-Z1	A	SKT 1P .100"L .041"DIA GLD NPb	2	XY1(2 PINS)	AUGAT	8134-HC-5P2		A
68	300-00025-Z1	A	SCREW 4-40X5/16" PH MACH SS NPb	7	XMH1 XMH2 XMH3 XMH4 XMH5 XMH6 XMH7	BUILDING FASTENERS	PMSSS 440 0031 PH		A
69	110-00013-Z1	D	CON SHUNT 2P .1"CTR BLK NPb	36		MOLEX	15-29-1025	INSTALL AT TEST	A
70	422-00180-Z1	A	LBL RoHS	1		IMAGE-TEK	LPP0054	PLACE LABEL ON THE SECONDARY SIDE	A

Figure 33. Bill of Materials (Page 2 of 2)

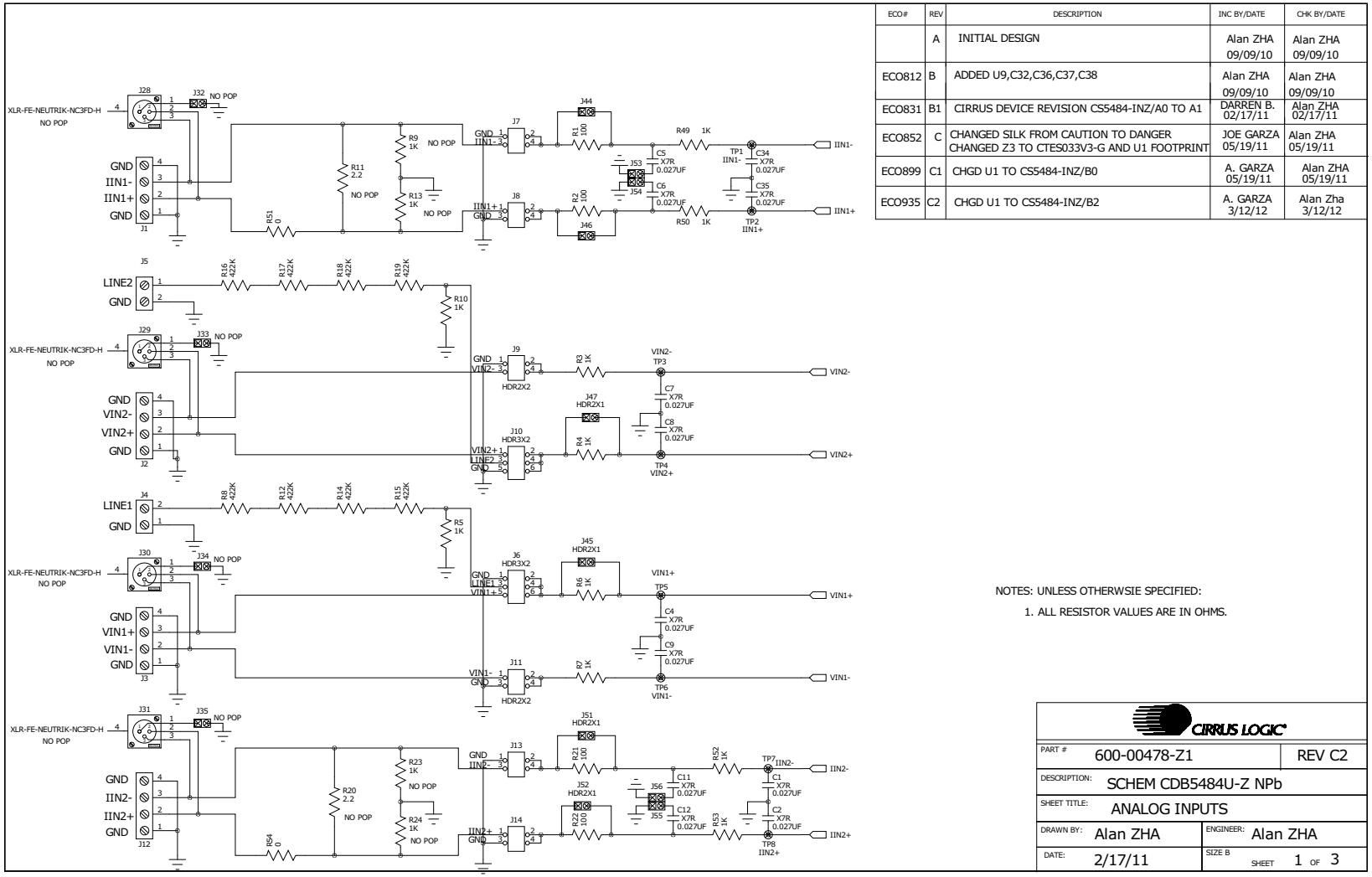

ECO#	REV	DESCRIPTION	INC BY/DATE	CHK BY/DATE
	A	INITIAL DESIGN	Alan ZHA 09/09/10	Alan ZHA 09/09/10
ECO812	B	ADDED U9,C32,C36,C37,C38	Alan ZHA 09/09/10	Alan ZHA 09/09/10
ECO831	B1	CIRRUS DEVICE REVISION CS5484-INZ/A0 TO A1	DARREN B. 02/17/11	Alan ZHA 02/17/11
ECO852	C	CHANGED SILK FROM CAUTION TO DANGER CHANGED Z3 TO CTES033V3-G AND U1 FOOTPRINT	JOE GARZA 05/19/11	Alan ZHA 05/19/11
ECO899	C1	CHGD U1 TO CS5484-INZ/B0	A. GARZA 05/19/11	Alan ZHA 05/19/11
ECO935	C2	CHGD U1 TO CS5484-INZ/B2	A. GARZA 3/12/12	Alan Zha 3/12/12

Figure 34. Schematic - Analog Inputs

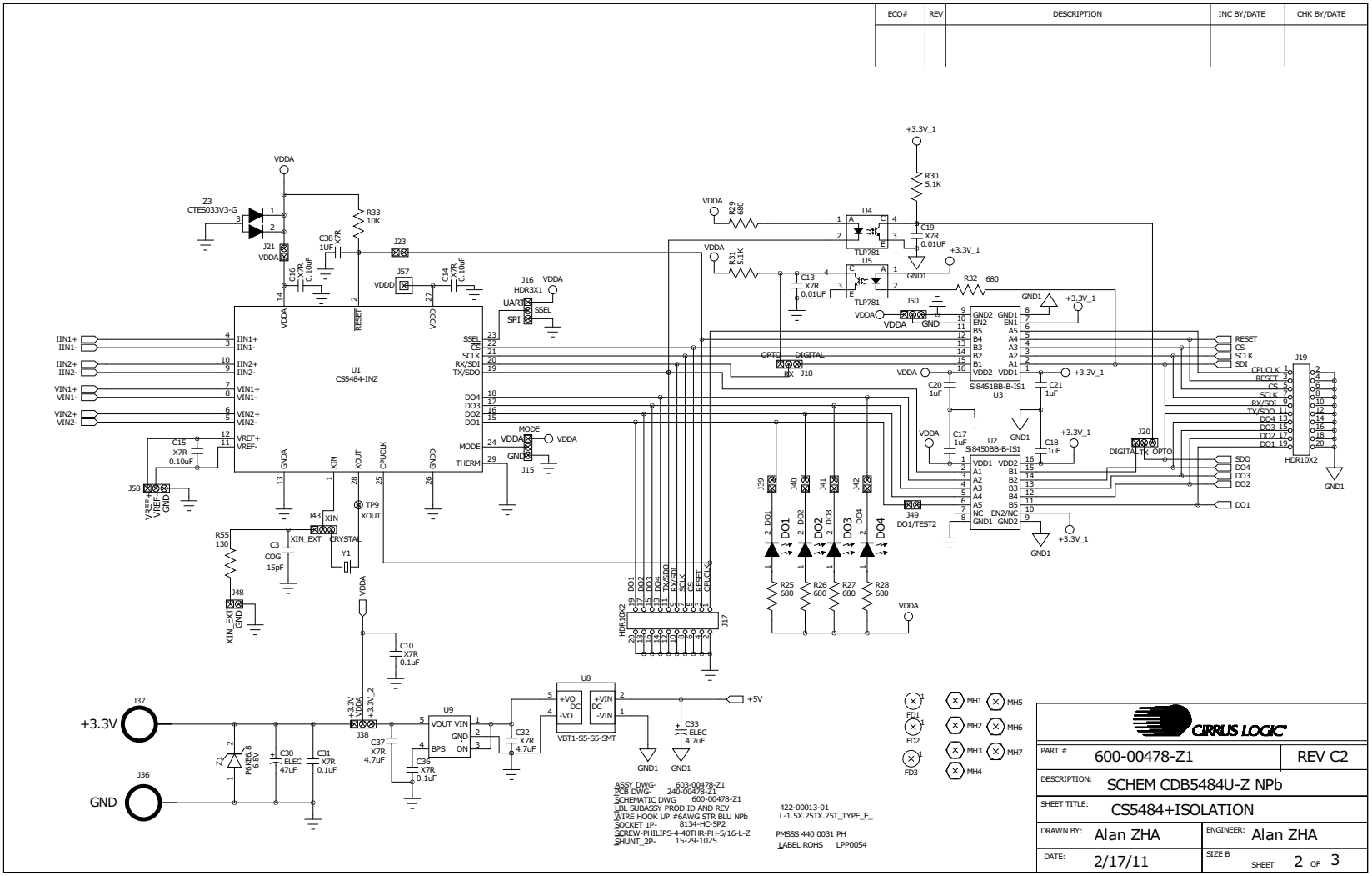

Figure 35. Schematic - CS5484 and Socket

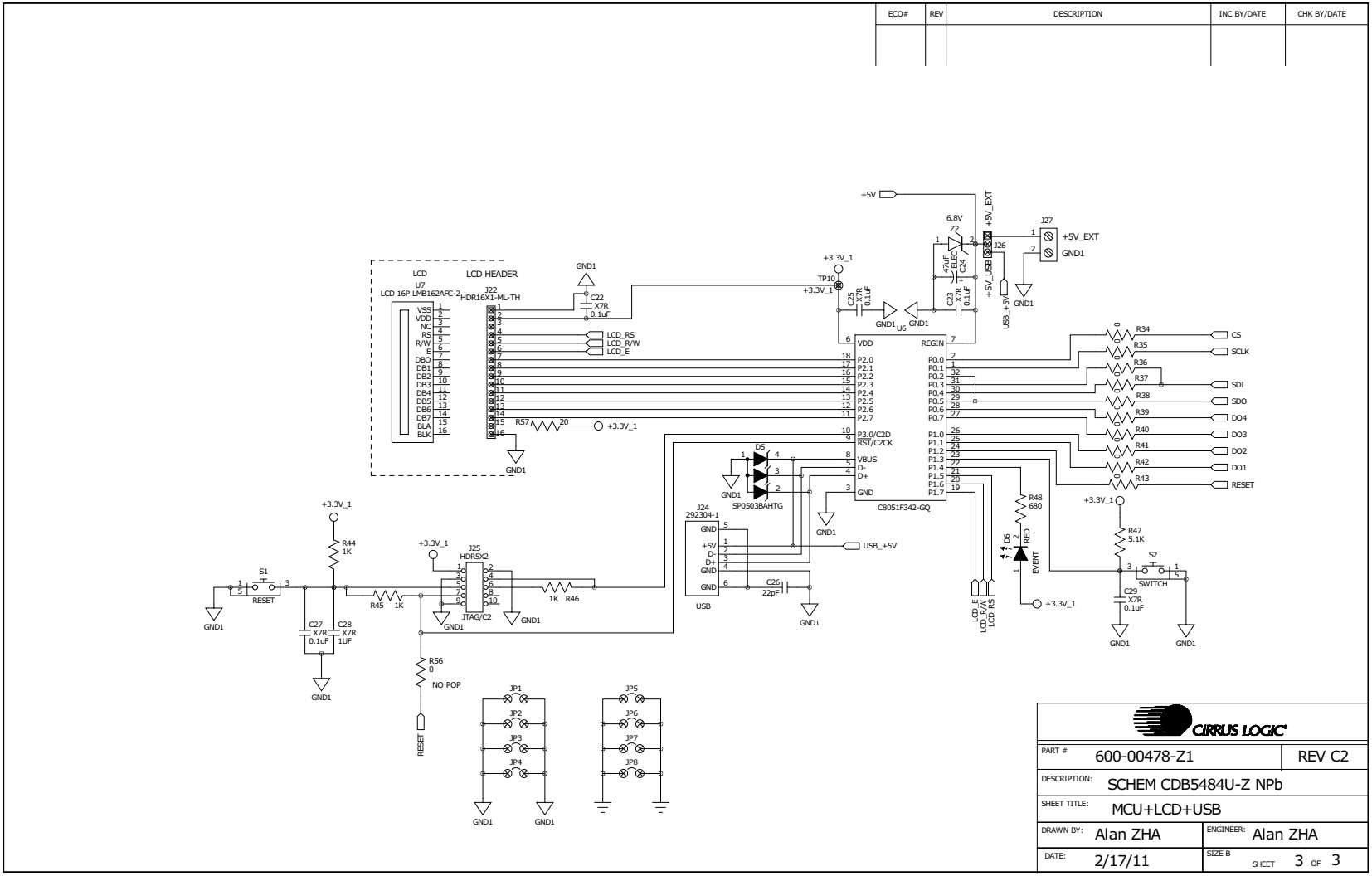

Figure 36. Schematic - Microcontroller and USB Interface

APPENDIX C. LAYER PLOTS

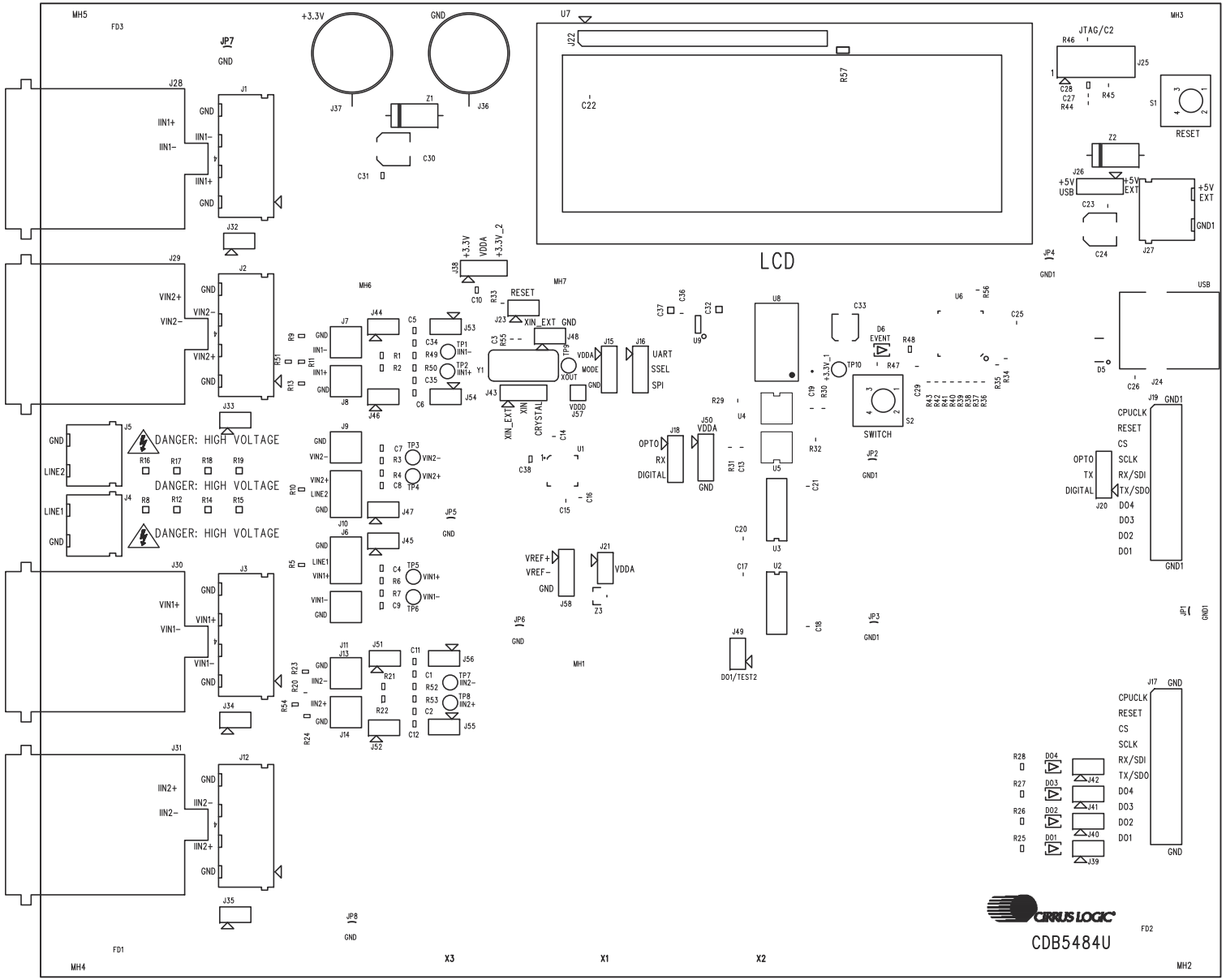

Figure 37. Top Silkscreen

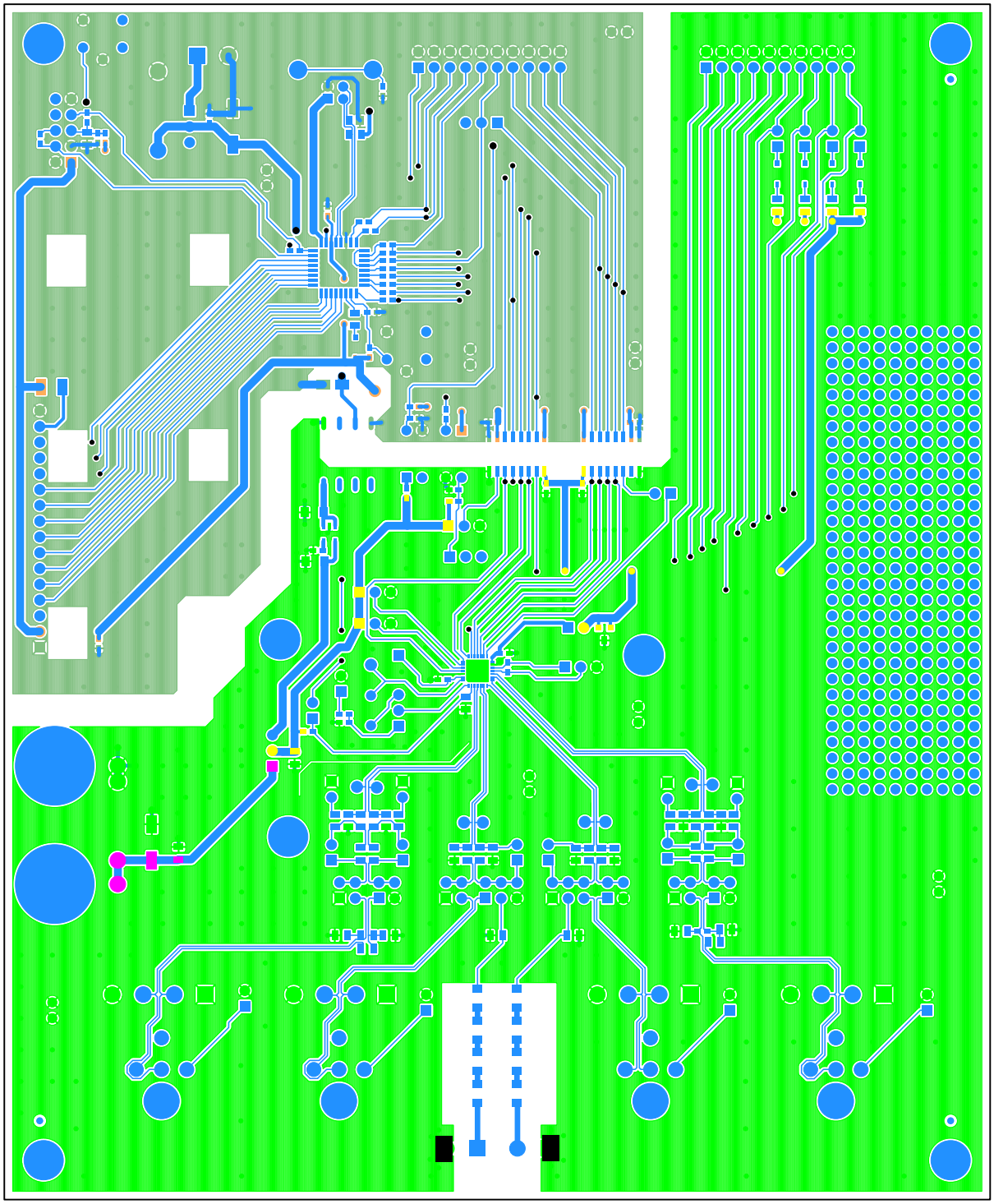

Figure 38. Top Routing

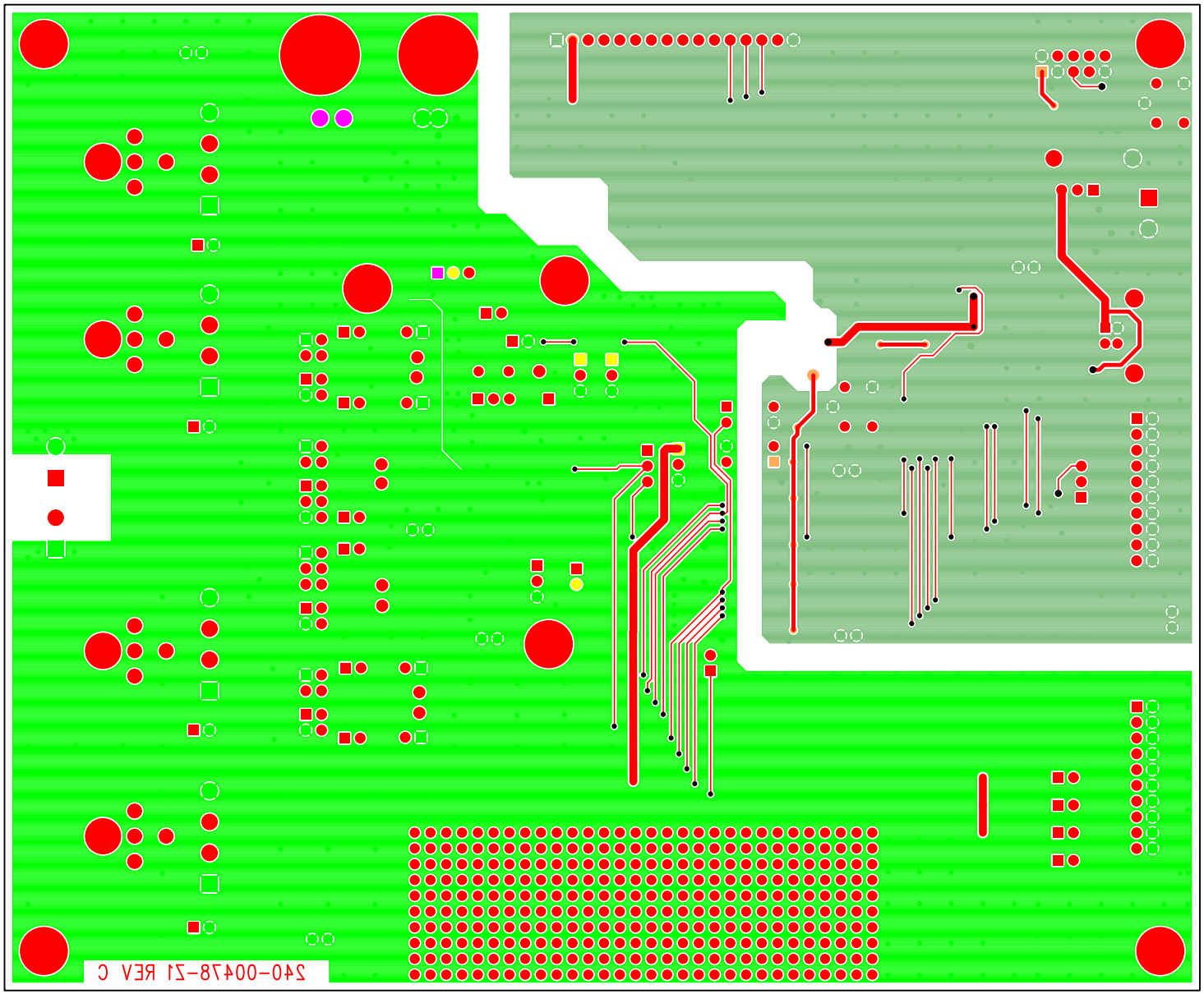

Figure 39. Bottom Routing

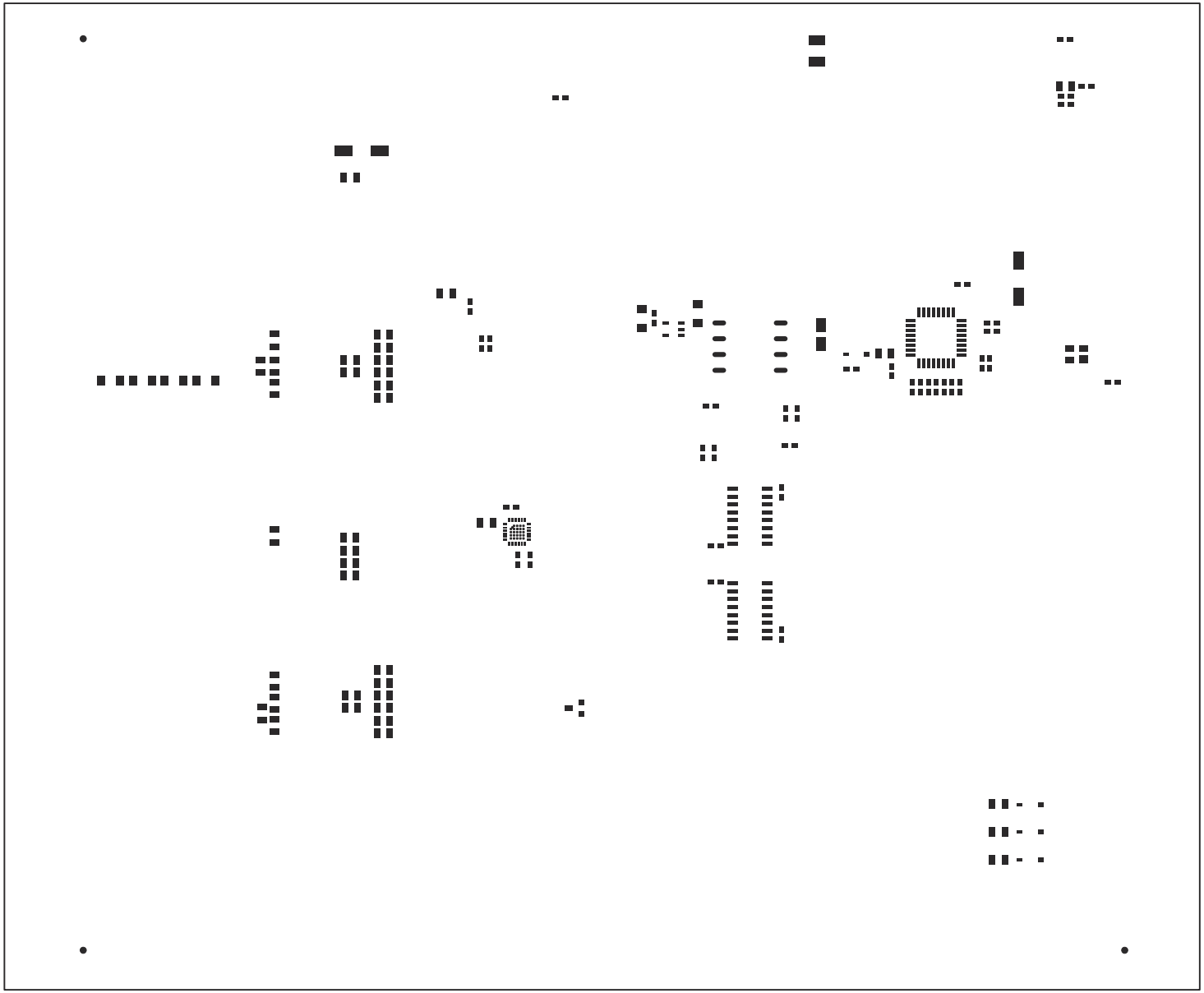

Figure 40. Solder Paste Mask

REVISION HISTORY

Revision	Date	Changes
DB1	APR 2011	Initial Release.
DB2	DEC 2011	Updated screen shots and circuit diagrams to align with B0 silicon.
DB3	JAN 2012	Corrected typographical errors.
DB4	MAR 2012	Updated content.
DB5	APR 2012	Updated screen shots and circuit diagrams to align with B2 silicon.