Series 110…105 / 114…117 / 150…106

Dual-in-line sockets and headers
Open frame / surface mount

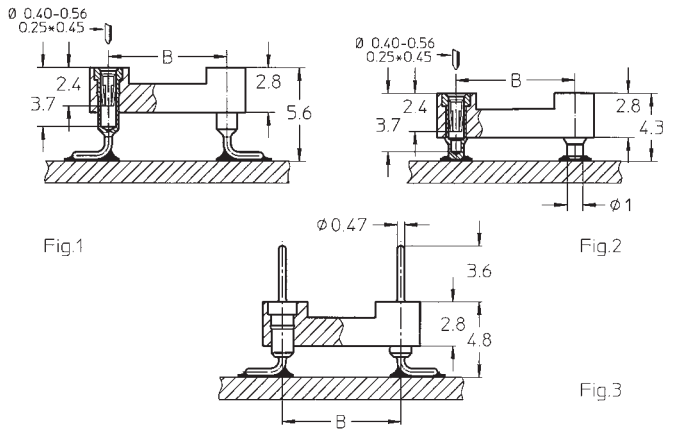

Specially designed for reflow soldering including vapor phase.

Insertion characteristics: receptacle 4-finger standard

New:
Pin connectors with selective plated precision screw machined pin, plating code Z1.
Connecting side 1: gold plated
soldering/PCB side 2: tin plated

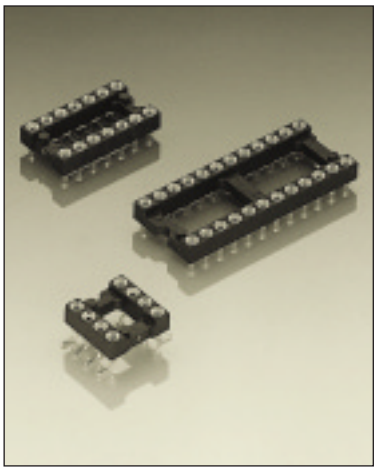

Platings	Sleeve	Clip	Pin
91	5 µm Sn Pb	0.25 µm Au	
99	5 µm Sn Pb	5 µm Sn Pb	
90			5 µm Sn Pb
Z1			1: 0.25 µm Au 2: 5 µm Sn Pb

Ordering information
Replace **xx** with required plating code. Other platings on request

Series 110-xx-xxx-41-105 and 150-xx-xxx-00-106 with gull wing terminals for maximum strength and easy in-circuit test
Series 114-xx-xxx-41-117 with floating contacts compensate effects of unevenly dispensed solder paste

No. of poles	Order Codes Plating: see ordering information				Insulator dimensions			
	Fig. 1	Fig. 2	Fig. 3		See page 50	A	B	C
10	110-xx-210-41-105	114-xx-210-41-117	150-xx-210-00-106		Fig. 1	12.6	5.08	7.6
4	110-xx-304-41-105	114-xx-304-41-117	150-xx-304-00-106		Fig. 2	5.0	7.62	10.1
6	110-xx-306-41-105	114-xx-306-41-117	150-xx-306-00-106		Fig. 3	7.6	7.62	10.1
8	110-xx-308-41-105	114-xx-308-41-117	150-xx-308-00-106		Fig. 4	10.1	7.62	10.1
10	110-xx-310-41-105	114-xx-310-41-117	150-xx-310-00-106		Fig. 5	12.6	7.62	10.1
14	110-xx-314-41-105	114-xx-314-41-117	150-xx-314-00-106	**For PCB Layout see page 60:**	Fig. 6	17.7	7.62	10.1
16	110-xx-316-41-105	114-xx-316-41-117	150-xx-316-00-106	**Fig. 4 Series 110 / 150,**	Fig. 7	20.3	7.62	10.1
18	110-xx-318-41-105	114-xx-318-41-117	150-xx-318-00-106	**Fig. 5 Series 114**	Fig. 8	22.8	7.62	10.1
20	110-xx-320-41-105	114-xx-320-41-117	150-xx-320-00-106		Fig. 9	25.3	7.62	10.1
22	110-xx-322-41-105	114-xx-322-41-117	150-xx-322-00-106		Fig. 10	27.8	7.62	10.1
24	110-xx-324-41-105	114-xx-324-41-117	150-xx-324-00-106		Fig. 11	30.4	7.62	10.18
28	110-xx-328-41-105	114-xx-328-41-117	150-xx-328-00-106		Fig. 12	35.5	7.62	10.1
22	110-xx-422-41-105	114-xx-422-41-117	150-xx-422-00-106		Fig. 13	27.8	10.16	12.6
24	110-xx-424-41-105	114-xx-424-41-117	150-xx-424-00-106		Fig. 14	30.4	10.16	12.6
28	110-xx-428-41-105	114-xx-428-41-117	150-xx-428-00-106		Fig. 15	35.5	10.16	12.6
32	110-xx-432-41-105	114-xx-432-41-117	150-xx-432-00-106		Fig. 16	40.6	10.16	12.6
24	110-xx-624-41-105	114-xx-624-41-117	150-xx-624-00-106		Fig. 17	30.4	15.24	17.7
28	110-xx-628-41-105	114-xx-628-41-117	150-xx-628-00-106		Fig. 18	35.5	15.24	17.7
32	110-xx-632-41-105	114-xx-632-41-117	150-xx-632-00-106		Fig. 19	40.6	15.24	17.7
36	110-xx-636-41-105	114-xx-636-41-117	150-xx-636-00-106		Fig. 20	45.7	15.24	17.7
40	110-xx-640-41-105	114-xx-640-41-117	150-xx-640-00-106		Fig. 21	50.6	15.24	17.7
42	110-xx-642-41-105	114-xx-642-41-117	150-xx-642-00-106		Fig. 22	53.2	15.24	17.7
48	110-xx-648-41-105	114-xx-648-41-117	150-xx-648-00-106		Fig. 23	60.9	15.24	17.7