molex
one company › a world of innovation

This document was generated on 03/17/2010

PLEASE CHECK WWW.MOLEX.COM FOR LATEST PART INFORMATION

Part Number: 0791091011

Status: Active

Description: 2.00mm (.079") Pitch Milli-Grid™ Receptacle, Surface Mount, Vertical, Top/Bottom Entry, without Press-fit Plastic Pegs, without Cap, Tube, 0.38µm (15µ") Gold (Au) Selective, 24 Circuits, Leadfree

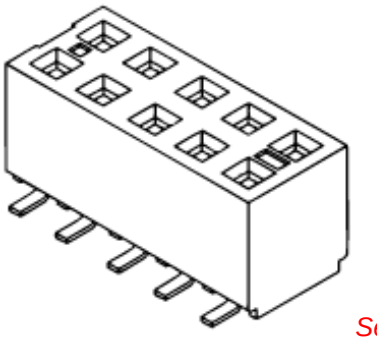

Series image - Reference only

Documents:

3D Model
Drawing (PDF)
Product Specification PS-79107 (PDF)
RoHS Certificate of Compliance (PDF)

Agency Certification

CSA	LR19980
UL	E29179

General

Product Family	PCB Receptacles
Series	79109
Application	Board-to-Board
Product Name	Milli-Grid™

Physical

Circuits (Loaded)	24
Color - Resin	Black
Durability (mating cycles max)	50
Flammability	94V-0
Glow-Wire Compliant	No
Lock to Mating Part	None
Material - Metal	Phosphor Bronze
Material - Plating Mating	Gold
Material - Plating Termination	Tin
Material - Resin	High Temperature Thermoplastic
Number of Rows	2
Orientation	Vertical
PCB Locator	No
PCB Retention	None
Packaging Type	Tube
Pitch - Mating Interface (in)	0.079 In
Pitch - Mating Interface (mm)	2.00 mm
Plating min: Mating (µin)	15
Plating min: Mating (µm)	0.375
Plating min: Termination (µin)	75
Plating min: Termination (µm)	1.875
Polarized to Mating Part	No
Polarized to PCB	No
Surface Mount Compatible (SMC)	N/A
Temperature Range - Operating	-55°C to +105°C
Termination Interface: Style	Surface Mount

Electrical

Current - Maximum per Contact	1A
Voltage - Maximum	125V

Solder Process Data

Duration at Max. Process Temperature (seconds)	10
Lead-free Process Capability	Reflow Capable (SMT only)
Max. Cycles at Max. Process Temperature	1
Process Temperature max. C	260

EU RoHS
ELV and RoHS Compliant

China RoHS

REACH SVHC
Not Reviewed

Halogen-Free Status
Not Reviewed

Need more information on product environmental compliance?

Email productcompliance@molex.com
For a multiple part number RoHS Certificate of Compliance, click here

Please visit the Contact Us section for any non-product compliance questions.

Search Parts in this Series
79109Series

Mates With
87833 , 87832 , 87831 , 87758 , 87759 , 87760

Material Info

Reference - Drawing Numbers

Product Specification	PS-79107
Sales Drawing	SDA-79109-****

This document was generated on 03/17/2010

PLEASE CHECK WWW.MOLEX.COM FOR LATEST PART INFORMATION

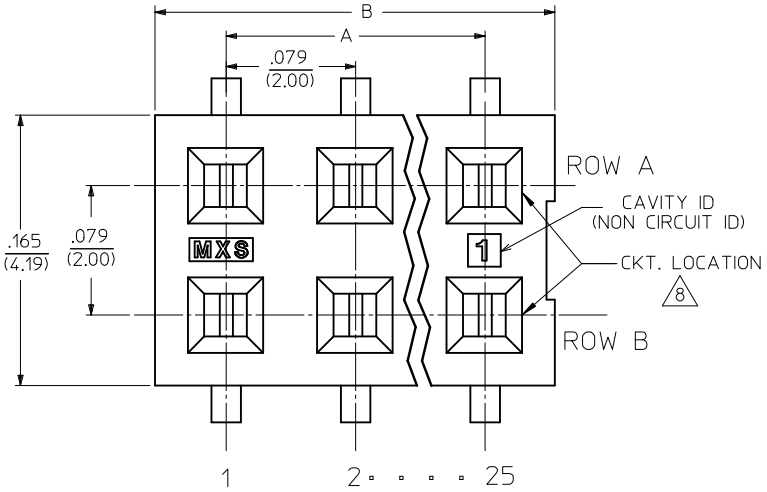

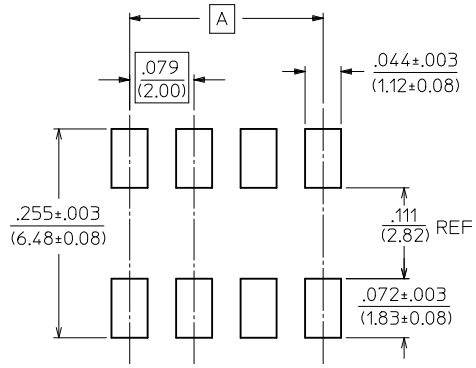

RECOMMENDED PCB PAD LAYOUT

NOTES:

1. HOUSING MATERIAL:
   LCP, GLASS FILLED, UL 94V-0
   COLOUR BLACK.
2. TERMINAL MATERIAL:
   PHOSPHOR BRONZE
3. SEE APPROPRIATE SHEET FOR CIRCUIT SIZE, PART NUMBERS AND OVERALL DIMENSIONS.
4. FOR ILLUSTRATION, 6 CKT ASSY SHOWN.
5. REFER TO PRODUCT SPEC PS-79107.
6. TUBE PACKAGING PER PK-70873-0217 OR TAPE PACKAGING PER PK-70873-0259
7. SEE SHT 3 FOR PEG OPTION ASSEMBLIES.
8. CKT LOCATIONS ARE NUMBERED FROM LEFT TO RIGHT WHEN VIEWING ASSY FROM TOP WITH THE GATE RECESS ON THE RIGHT AS SHOWN.
9. SEE SHT 5 & 6 FOR VOIDED CIRCUIT PART NUMBERS.
10. MEASUREMENT IS TAKEN BETWEEN THE TANGENT OF THE TOE TO TIP OF THE TERMINAL.

PLATING OPTION:

4. 30u" (0.75um) MIN. GOLD PLATE IN SELECTED AREA AND 75u" (1.88um) MIN. TIN PLATE IN SELECTED AREA OVER 50u" (1.25um) MIN. NICKEL OVERALL.
5. 15u" (0.38um) MIN. GOLD PLATE IN SELECTED AREA AND 75u" (1.88um) MIN. TIN PLATE IN SELECTED AREA OVER 50u" (1.25um) MIN. NICKEL OVERALL.
6. 5u" (0.13um) MIN. GOLD PLATE IN SELECTED AREA AND 75u" (1.88um) MIN. TIN PLATE IN SELECTED AREA OVER 50u" (1.25um) MIN. NICKEL OVERALL.

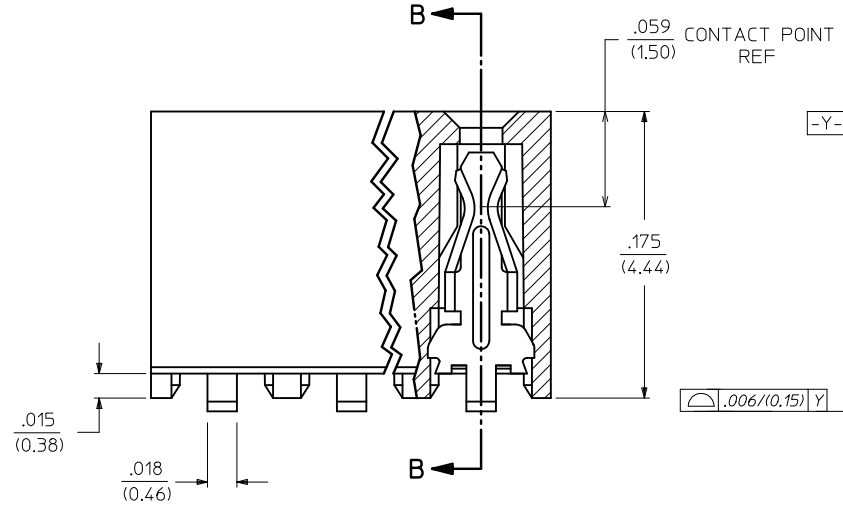

SECTION A-A

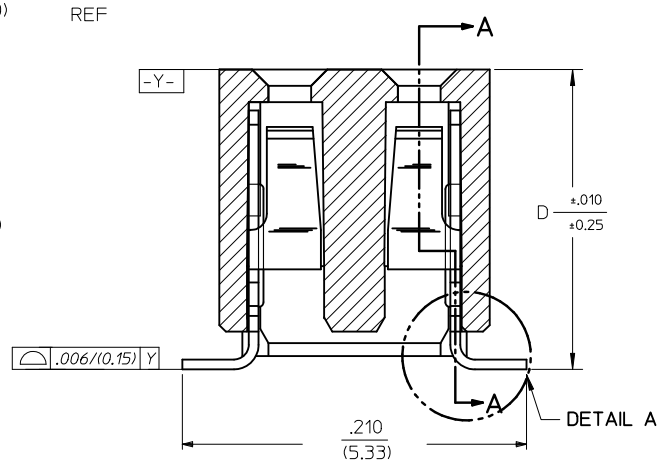

SECTION B-B

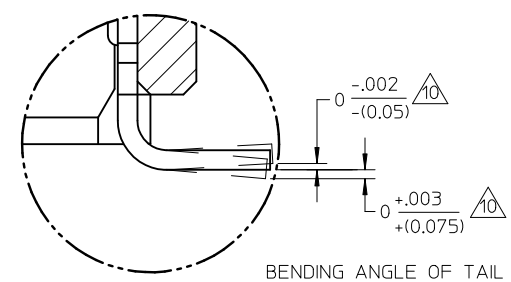

BENDING ANGLE OF TAIL

DETAIL A

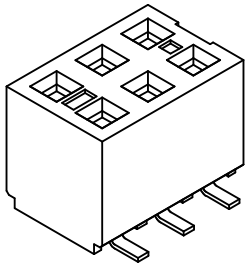

REVISED EC NO: S2010-0566 DRWN:SKANG 2010/01/05 CH'KD:ATSEE 2010/02/03 APPR:MLONG 2010/02/19 M6	DESCRIPTION REV	QUALITY SYMBOLS F_A=0 F_C=0 F_P=0	GENERAL TOLERANCES (UNLESS SPECIFIED) mm / INCH 4 PLACES ± --- / ± --- 3 PLACES ± --- / ± .010 2 PLACES ± 0.25 / ± .015 1 PLACE ± 0.38 / ± --- ANGULAR ± 3 ° DRAFT WHERE APPLICABLE MUST REMAIN WITHIN DIMENSIONS	DIMENSION STYLE IN/MM DRAWN BY AAB DATE 1989/05/15 CHECKED BY MJM DATE 1989/05/15 APPROVED BY MLONG DATE 2010/02/18 MATERIAL NO. SEE TABLE	SCALE NTS DESIGN UNITS INCH THIRD ANGLE PROJECTION TITLE 2MM DUAL ROW VERTICAL RECEPTACLE, SMT molex MOLEX INCORPORATED DOCUMENT NO. SDA-79109-**** SHEET NO. 1 OF 10	SIZE A3	THIS DRAWING CONTAINS INFORMATION THAT IS PROPRIETARY TO MOLEX INCORPORATED AND SHOULD NOT BE USED WITHOUT WRITTEN PERMISSION

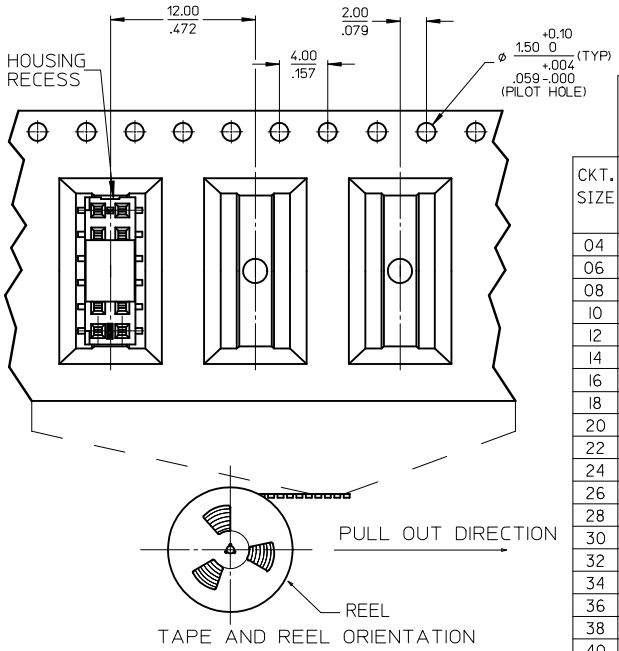

WITHOUT PEG OPTION

CKT. SIZE	DIM. "A" INCH	DIM. "A" MM	DIM. "B" INCH	DIM. "B" MM	DIM. "D" INCH	DIM. "D" MM	PLATING OPTION 5 ITEM NO. TUBE PACKED (WITHOUT CAP)	PLATING OPTION 5 ITEM NO. TAPE PACKED (WITH CAP A)	PLATING OPTION 4 ITEM NO. TUBE PACKED (WITHOUT CAP)	PLATING OPTION 4 ITEM NO. TAPE PACKED (WITH CAP A)	PLATING OPTION 6 ITEM NO. TUBE PACKED (WITHOUT CAP)	PLATING OPTION 6 ITEM NO. TAPE PACKED (WITH CAP A)
04	.079	(2.00)	.165	(4.19)	.183	(4.65)	79109-1001	79109-8401	79109-1051	79109-8451	X 79109-1101	-
06	.157	(4.00)	.244	(6.19)	.183	(4.65)	79109-1002	79109-8402	79109-1052	79109-8452	X 79109-1102	-
08	.236	(6.00)	.322	(8.19)	.183	(4.65)	79109-1003	79109-8403	79109-1053	79109-8453	X 79109-1103	-
10	.315	(8.00)	.401	(10.19)	.183	(4.65)	79109-1004	79109-8404	79109-1054	79109-8454	X 79109-1104	-
12	.394	(10.00)	.480	(12.19)	.183	(4.65)	79109-1005	79109-8405	79109-1055	79109-8455	X 79109-1105	-
14	.472	(12.00)	.559	(14.19)	.183	(4.65)	79109-1006	79109-8406	79109-1056	79109-8456	X 79109-1106	-
16	.551	(14.00)	.637	(16.19)	.183	(4.65)	79109-1007	79109-8407	79109-1057	79109-8457	X 79109-1107	-
18	.630	(16.00)	.716	(18.19)	.183	(4.65)	79109-1008	79109-8408	79109-1058	79109-8458	X 79109-1108	-
20	.709	(18.00)	.795	(20.19)	.183	(4.65)	79109-1009	79109-8409	79109-1059	79109-8459	X 79109-1109	-
22	.787	(20.00)	.874	(22.19)	.183	(4.65)	79109-1010	79109-8410	79109-1060	79109-8460	X 79109-1110	-
24	.866	(22.00)	.952	(24.19)	.183	(4.65)	79109-1011	79109-8411	79109-1061	79109-8461	X 79109-1111	-
26	.945	(24.00)	1.031	(26.19)	.183	(4.65)	79109-1012	79109-8412	79109-1062	79109-8462	X 79109-1112	-
28	1.024	(26.00)	1.110	(28.19)	.183	(4.65)	79109-1013	79109-8413	79109-1063	79109-8463	X 79109-1113	-
30	1.102	(28.00)	1.188	(30.19)	.183	(4.65)	79109-1014	79109-8414	79109-1064	79109-8464	X 79109-1114	-
32	1.181	(30.00)	1.267	(32.19)	.183	(4.65)	79109-1015	79109-8415	79109-1065	79109-8465	X 79109-1115	-
34	1.260	(32.00)	1.346	(34.19)	.183	(4.65)	79109-1016	79109-8416	79109-1066	79109-8466	X 79109-1116	-
36	1.338	(34.00)	1.425	(36.19)	.183	(4.65)	79109-1017	79109-8417	79109-1067	79109-8467	X 79109-1117	-
38	1.417	(36.00)	1.504	(38.19)	.183	(4.65)	79109-1018	79109-8418	79109-1068	79109-8468	X 79109-1118	-
40	1.496	(38.00)	1.582	(40.19)	.183	(4.65)	79109-1019	79109-8419	79109-1069	79109-8469	X 79109-1119	-
42	1.575	(40.00)	1.661	(42.19)	.183	(4.65)	79109-1020	79109-8420	79109-1070	79109-8470	X 79109-1120	-
44	1.654	(42.00)	1.740	(44.19)	.183	(4.65)	79109-1021	79109-8421	79109-1071	79109-8471	X 79109-1121	-
46	1.732	(44.00)	1.818	(46.19)	.183	(4.65)	79109-1022	79109-8422	79109-1072	79109-8472	X 79109-1122	-
48	1.811	(46.00)	1.897	(48.19)	.183	(4.65)	79109-1023	79109-8423	79109-1073	79109-8473	X 79109-1123	-
50	1.890	(48.00)	1.976	(50.19)	.183	(4.65)	79109-1024	79109-8424	79109-1074	79109-8474	X 79109-1124	-

"X" INDICATES TOOLING NOT AVAILABLE

NOTES:

1. LEADER AND TRAILER TAPE

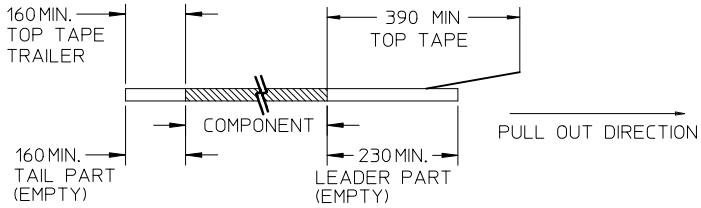

2. PEELING OFF FORCE OF THE TOP TAPE: 20-80gf.
(PEELING DIRECTION AS SHOWN IN FOLLOWING FIGURE)

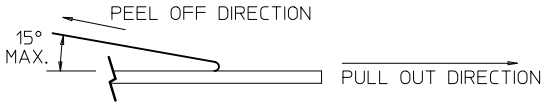

3. PACKAGING STANDARD IS AS PER EIA-481.

4. TAPE & REEL QUANTITY = 500 PCS/REEL

SPECIAL PACKAGING (TAPE PACKED WITHOUT CAP)

CKT. SIZE	DIM. "A" INCH	DIM. "A" MM	DIM. "B" INCH	DIM. "B" MM	DIM. "D" INCH	DIM. "D" MM	ITEM NO.	PLATING OPTION SEE SHEET 1
06	.157	(4.00)	.244	(6.19)	.183	(4.65)	79109-9004	5
20	.709	(18.00)	.795	(20.19)	.183	(4.65)	79109-9005	5
50	1.890	(48.00)	1.976	(50.19)	.183	(4.65)	79109-9006	5
34	1.260	(32.00)	1.346	(34.19)	.183	(4.65)	79109-9007	5

REVISED
EC NO: S2010-0566 2010/01/05
DRWN:SKANG 2010/02/03
CH'KD:ATSEE 2010/02/19
APPR:MLONG
DESCRIPTION
M6
REV

QUALITY SYMBOLS
F_A=0
F_C=0
F_B=0

GENERAL TOLERANCES (UNLESS SPECIFIED)

	mm	INCH
4 PLACES	± ---	± ---
3 PLACES	± ---	± .010
2 PLACES	± 0.25	± .015
1 PLACE	± 0.38	± ---
ANGULAR ± 3 °		

DRAFT WHERE APPLICABLE MUST REMAIN WITHIN DIMENSIONS

DIMENSION STYLE: IN/MM
SCALE: NTS
DESIGN UNITS: INCH
THIRD ANGLE PROJECTION

DRAWN BY: AAB DATE: 1989/05/15
CHECKED BY: MJM DATE: 1989/05/15
APPROVED BY: MLONG DATE: 2010/02/18

TITLE: 2MM DUAL ROW VERTICAL RECEPTACLE, SMT

MOLEX INCORPORATED

MATERIAL NO.: SEE TABLE
DOCUMENT NO.: SDA-79109-****
SHEET NO.: 2 OF 10
SIZE: A3

THIS DRAWING CONTAINS INFORMATION THAT IS PROPRIETARY TO MOLEX INCORPORATED AND SHOULD NOT BE USED WITHOUT WRITTEN PERMISSION

ASSEMBLIES WITHOUT PEGS

VOIDED CIRCUIT OPTION

CKT. SIZE	ASSEMBLY (WITHOUT CAP IN TUBE) PART NUMBER	VOID LOCATION(S) SEE SHEET 1 FOR CONVENTION ROW	CKT. NO.(S)	PLATING OPTION	DIM. "A" INCH	DIM. "A" MM	DIM. "B" INCH	DIM. "B" MM	DIM. "D" INCH	DIM. "D" MM
22	79109-5011	A	2	4	.787	(20.00)	.874	(22.19)	.183	(4.65)
6	79109-5012	A	2	5	.157	(4.00)	.244	(6.19)	.183	(4.65)

CKT SIZE	ASSEMBLY (WITH CAP A IN T&R) PART NUMBER	VOID LOCATION(S) SEE SHEET 1 FOR CONVENTION ROW	CKT NO.	PLATING OPTION	DIM A INCH	DIM A MM	DIM B INCH	DIM B MM	DIM D INCH	DIM D MM
50	79109-8924	A	13, 23	5	1.890	(48.00)	1.976	(50.19)	.183	(4.65)
		B	23							

NOTES:
1. TERMINALS WILL BE PRESENT IN VOIDED LOCATIONS. HOWEVER, PIN WINDOWS WILL BE CLOSED.
2. VOIDS CAN ONLY BE PRESENT IN ONE ROW OF A CONNECTOR.

REVISED
EC NO: S2010-0566 2010/01/05
DRWN:SKANG 2010/02/03
CH'KD:ATSEE 2010/02/19
APPR:MLONG
DESCRIPTION
M6
REV

QUALITY SYMBOLS
FA=0
FC=0
FP=0

GENERAL TOLERANCES (UNLESS SPECIFIED)

	mm	INCH
4 PLACES	± ---	± ---
3 PLACES	± ---	± .010
2 PLACES	± 0.25	± .015
1 PLACE	± 0.38	± ---
ANGULAR ± 3 °		

DRAFT WHERE APPLICABLE MUST REMAIN WITHIN DIMENSIONS

DIMENSION STYLE: IN/MM
SCALE: NTS
DESIGN UNITS: INCH
THIRD ANGLE PROJECTION

DRAWN BY: AAB DATE: 1989/05/15
CHECKED BY: MJM DATE: 1989/05/15
APPROVED BY: MLONG DATE: 2010/02/18
MATERIAL NO.: SEE TABLE
SIZE: A3

TITLE: 2MM DUAL ROW VERTICAL RECEPTACLE, SMT

molex MOLEX INCORPORATED

DOCUMENT NO.: SDA-79109-****
SHEET NO.: 3 OF 10

THIS DRAWING CONTAINS INFORMATION THAT IS PROPRIETARY TO MOLEX INCORPORATED AND SHOULD NOT BE USED WITHOUT WRITTEN PERMISSION

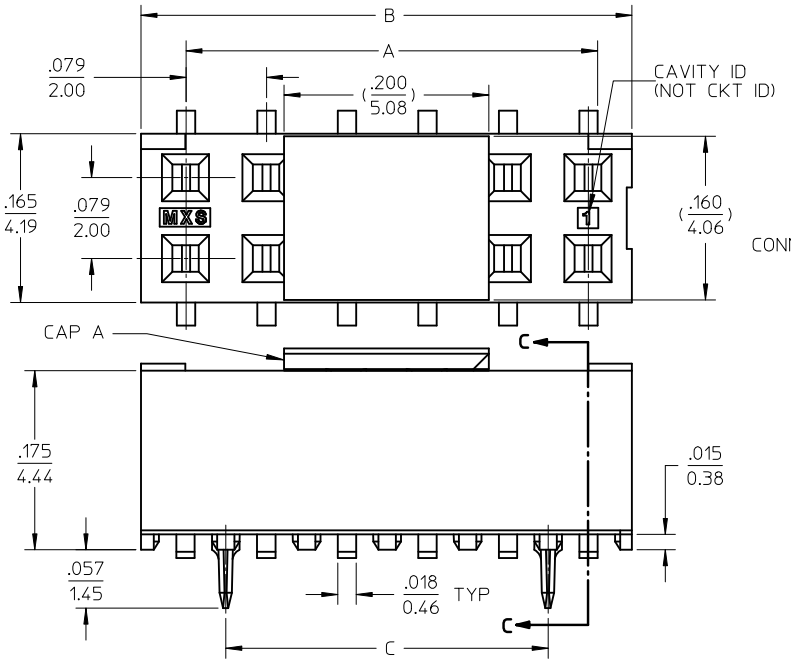

PEG OPTION

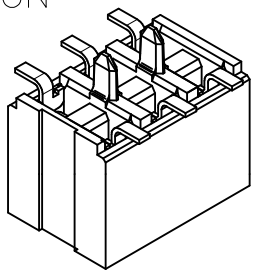

CONNECTOR WITH CAP

SECTION C-C

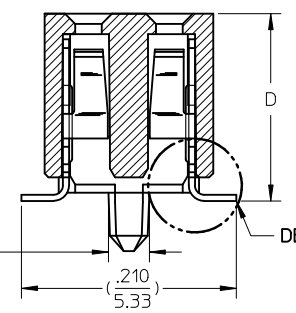

PLATING OPTION:

(4) 30uin (0.75um) MIN. GOLD PLATE IN SELECTED AREA AND 75uin (1.88um) MIN. TIN IN SELECTED AREA OVER 50uin (1.25um) MIN. NICKEL OVER-ALL.

(5) 15uin (0.38um) MIN. GOLD PLATE IN SELECTED AREA AND 75uin (1.88um) MIN. TIN IN SELECTED AREA OVER 50uin (1.25um) MIN. NICKEL OVER-ALL.

(6) 5uin (0.13um) MIN. GOLD PLATE IN SELECTED AREA AND 75uin (1.88um) MIN. TIN IN SELECTED AREA OVER 50uin (1.25um) MIN. NICKEL OVER-ALL.

NOTES:

1 - HOUSING MATERIAL: GLASS FILLED HIGH TEMP. THERMOPLASTIC. COLOR: BLACK.
2 - TERMINAL MATERIAL: PHOSPHOR BRONZE
3 - SEE APPROPRIATE SHEET FOR CIRCUIT SIZE, PART NUMBERS AND OVER-ALL DIMENSIONS.
4 - FOR ILLUSTRATION, 6&12 CIRCUIT ASSEMBLY SHOWN.
5 - REFER TO PRODUCT SPECIFICATION PS-79107.
6 - TUBE PACKAGING PER PK-70873-0217 OR TAPE PACKAGING PER PK-70873-0259.
7 - SEE PSX-79107 FOR SUGGESTED BOTTOM ENTRY PIN LENGTHS.
8 - .035 DIA. FOR PRESS FIT ONLY. USE .039±.002 FOR ALIGNMENT PURPOSES ON PICK AND PLACE.
9 - MEASUREMENT IS TAKEN BETWEEN THE TANGENT OF THE TOE TO TIP OF THE TERMINAL.

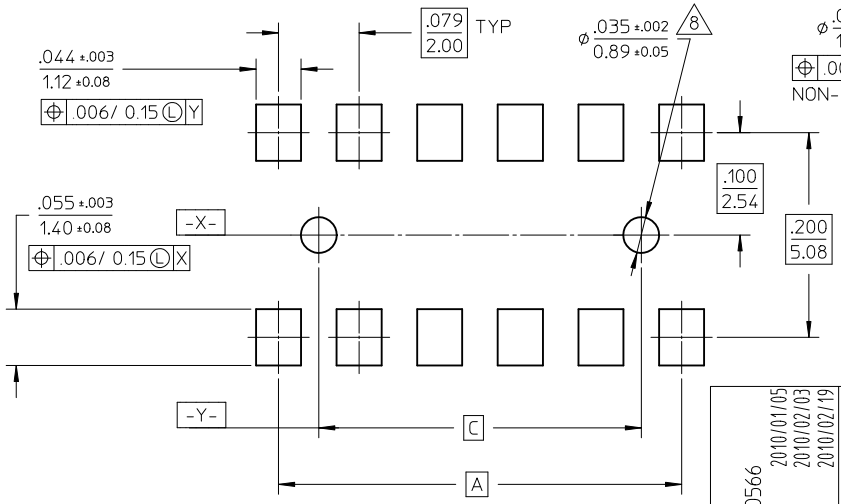

RECOMMENDED PCB LAYOUT

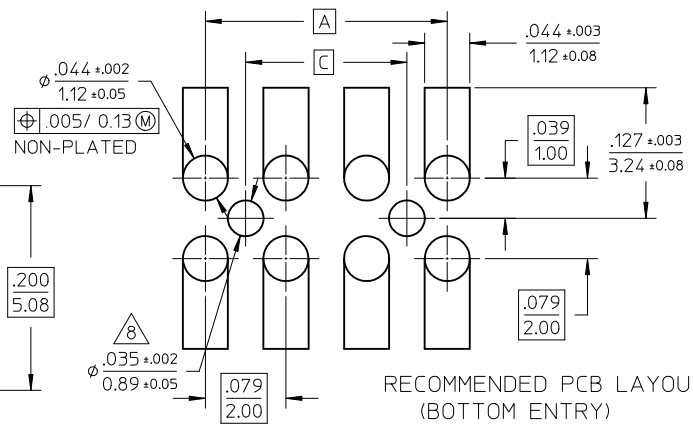

RECOMMENDED PCB LAYOUT
(BOTTOM ENTRY)

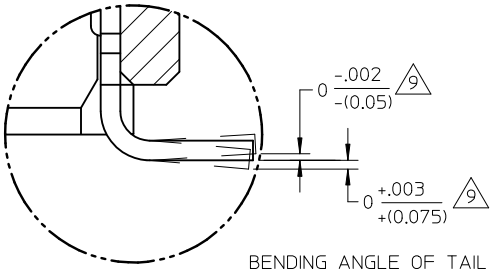

DETAIL A

BENDING ANGLE OF TAIL

REV	DESCRIPTION
M6	REVISED EC NO: S2010-0566 DRWN:SKANG 2010/01/05 CH'KD:ATSEE 2010/02/03 APPR:MLONG 2010/02/19

QUALITY SYMBOLS: F_A=0, F_C=0, F_P=0

GENERAL TOLERANCES (UNLESS SPECIFIED)

	mm	INCH
4 PLACES	± ---	± ---
3 PLACES	± ---	± .010
2 PLACES	± 0.25	± .015
1 PLACE	± 0.38	± ---
ANGULAR ± 3 °		

DRAFT WHERE APPLICABLE MUST REMAIN WITHIN DIMENSIONS

DIMENSION STYLE: IN/MM
SCALE: NTS
DESIGN UNITS: INCH
THIRD ANGLE PROJECTION

DRAWN BY	AAB	DATE 1989/05/15
CHECKED BY	MJM	DATE 1989/05/15
APPROVED BY	MLONG	DATE 2010/02/18

TITLE: 2MM DUAL ROW VERTICAL RECEPTACLE, SMT

molex MOLEX INCORPORATED

MATERIAL NO.: SEE TABLE
DOCUMENT NO.: SDA-79109-****
SHEET NO.: 4 OF 10

SIZE: A3

THIS DRAWING CONTAINS INFORMATION THAT IS PROPRIETARY TO MOLEX INCORPORATED AND SHOULD NOT BE USED WITHOUT WRITTEN PERMISSION

PEG OPTION

CKT. SIZE	DIM. "A" INCH	DIM. "A" MM	DIM. "B" INCH	DIM. "B" MM	DIM. "C" INCH	DIM. "C" MM	DIM. "D" INCH	DIM. "D" MM	PLATING OPTION 5 ITEM NO. TUBE PACKED (WITHOUT CAP)	PLATING OPTION 5 ITEM NO. TAPE PACKED (WITH CAP A)	PLATING OPTION 4 ITEM NO. TUBE PACKED (WITHOUT CAP)	PLATING OPTION 4 ITEM NO. TAPE PACKED (WITH CAP A)	PLATING OPTION 6 ITEM NO. TUBE PACKED (WITHOUT CAP)	PLATING OPTION 6 ITEM NO. TAPE PACKED (WITH CAP A)
04	.079	(2.00)	.165	(4.19)	-	-	.183	(4.65)	79109-1201	79109-8601	79109-1251	79109-8651	X 79109-1301	-
06	.157	(4.00)	.244	(6.19)	.079	(2.00)	.183	(4.65)	79109-1202	79109-8602	79109-1252	79109-8652	X 79109-1302	-
08	.236	(6.00)	.322	(8.19)	.157	(4.00)	.183	(4.65)	79109-1203	79109-8603	79109-1253	79109-8653	X 79109-1303	-
10	.315	(8.00)	.401	(10.19)	.236	(6.00)	.183	(4.65)	79109-1204	79109-8604	79109-1254	79109-8654	X 79109-1304	-
12	.394	(10.00)	.480	(12.19)	.315	(8.00)	.183	(4.65)	79109-1205	79109-8605	79109-1255	79109-8655	X 79109-1305	-
14	.472	(12.00)	.559	(14.19)	.394	(10.00)	.183	(4.65)	79109-1206	79109-8606	79109-1256	79109-8656	X 79109-1306	-
16	.551	(14.00)	.637	(16.19)	.472	(12.00)	.183	(4.65)	79109-1207	79109-8607	79109-1257	79109-8657	X 79109-1307	-
18	.630	(16.00)	.716	(18.19)	.551	(14.00)	.183	(4.65)	79109-1208	79109-8608	79109-1258	79109-8658	X 79109-1308	-
20	.709	(18.00)	.795	(20.19)	.630	(16.00)	.183	(4.65)	79109-1209	79109-8609	79109-1259	79109-8659	X 79109-1309	-
22	.787	(20.00)	.874	(22.19)	.709	(18.00)	.183	(4.65)	79109-1210	79109-8610	79109-1260	79109-8660	X 79109-1310	-
24	.866	(22.00)	.952	(24.19)	.787	(20.00)	.183	(4.65)	79109-1211	79109-8611	79109-1261	79109-8661	X 79109-1311	-
26	.945	(24.00)	1.031	(26.19)	.866	(22.00)	.183	(4.65)	79109-1212	79109-8612	79109-1262	79109-8662	X 79109-1312	-
28	1.024	(26.00)	1.110	(28.19)	.945	(24.00)	.183	(4.65)	79109-1213	79109-8613	79109-1263	79109-8663	X 79109-1313	-
30	1.102	(28.00)	1.188	(30.19)	1.024	(26.00)	.183	(4.65)	79109-1214	79109-8614	79109-1264	79109-8664	X 79109-1314	-
32	1.181	(30.00)	1.267	(32.19)	1.102	(28.00)	.183	(4.65)	79109-1215	79109-8615	79109-1265	79109-8665	X 79109-1315	-
34	1.260	(32.00)	1.346	(34.19)	1.181	(30.00)	.183	(4.65)	79109-1216	79109-8616	79109-1266	79109-8666	X 79109-1316	-
36	1.338	(34.00)	1.425	(36.19)	1.260	(32.00)	.183	(4.65)	79109-1217	79109-8617	79109-1267	79109-8667	X 79109-1317	-
38	1.417	(36.00)	1.504	(38.19)	1.338	(34.00)	.183	(4.65)	79109-1218	79109-8618	79109-1268	79109-8668	X 79109-1318	-
40	1.496	(38.00)	1.582	(40.19)	1.417	(36.00)	.183	(4.65)	79109-1219	79109-8619	79109-1269	79109-8669	X 79109-1319	-
42	1.575	(40.00)	1.661	(42.19)	1.496	(38.00)	.183	(4.65)	79109-1220	79109-8620	79109-1270	79109-8670	X 79109-1320	-
44	1.654	(42.00)	1.740	(44.19)	1.575	(40.00)	.183	(4.65)	79109-1221	79109-8621	79109-1271	79109-8671	X 79109-1321	-
46	1.732	(44.00)	1.818	(46.19)	1.654	(42.00)	.183	(4.65)	79109-1222	79109-8622	79109-1272	79109-8672	X 79109-1322	-
48	1.811	(46.00)	1.897	(48.19)	1.732	(44.00)	.183	(4.65)	79109-1223	79109-8623	79109-1273	79109-8673	X 79109-1323	-
50	1.890	(48.00)	1.976	(50.19)	1.811	(46.00)	.183	(4.65)	79109-1224	79109-8624	79109-1274	79109-8674	X 79109-1324	-

"X" INDICATES TOOLING NOT AVAILABLE

REVISED
EC NO: S2010-0566 2010/01/05
DRWN:SKANG 2010/02/03
CH'KD:ATSEE
APPR:MLONG 2010/02/19
M6
REV DESCRIPTION

QUALITY SYMBOLS
F_A=0
F_C=0
F_P=0

GENERAL TOLERANCES (UNLESS SPECIFIED)

	mm	INCH
4 PLACES	± ---	± ---
3 PLACES	± ---	± .010
2 PLACES	± 0.25	± .015
1 PLACE	± 0.38	± ---
ANGULAR ± 3 °		

DRAFT WHERE APPLICABLE MUST REMAIN WITHIN DIMENSIONS

DIMENSION STYLE: IN/MM
SCALE: NTS
DESIGN UNITS: INCH
THIRD ANGLE PROJECTION

DRAWN BY: AAB DATE: 1989/05/15
CHECKED BY: MJM DATE: 1989/05/15
APPROVED BY: MLONG DATE: 2010/02/18
MATERIAL NO.: SEE TABLE

TITLE: 2MM DUAL ROW VERTICAL RECEPTACLE, SMT

MOLEX INCORPORATED

DOCUMENT NO.: SDA-79109-****
SHEET NO.: 5 OF 10
SIZE: A3

THIS DRAWING CONTAINS INFORMATION THAT IS PROPRIETARY TO MOLEX INCORPORATED AND SHOULD NOT BE USED WITHOUT WRITTEN PERMISSION

PEG OPTION

SPECIAL PACKAGING (TAPE PACKED WITHOUT CAP)

CKT. SIZE	DIM. "A" INCH	DIM. "A" MM	DIM. "B" INCH	DIM. "B" MM	DIM. "C" INCH	DIM. "C" MM	DIM. "D" INCH	DIM. "D" MM	ITEM NO.	PLATING OPTION SEE SHEET 1
50	1.890	(48.00)	1.976	(50.19)	1.811	(46.00)	.183	(4.65)	79109-9103	5

REVISED
EC NO: S2010-0566
DRWN:SKANG 2010/01/05
CH'KD:ATSEE 2010/02/03
APPR:MLONG 2010/02/19
M6

REV | DESCRIPTION

QUALITY SYMBOLS
F_A=0
F_C=0
F_P=0

GENERAL TOLERANCES (UNLESS SPECIFIED)

	mm	INCH
4 PLACES	± ---	± ---
3 PLACES	± ---	± .010
2 PLACES	± 0.25	± .015
1 PLACE	± 0.38	± ---

ANGULAR ± 3 °

DRAFT WHERE APPLICABLE MUST REMAIN WITHIN DIMENSIONS

DIMENSION STYLE: IN/MM
SCALE: NTS
DESIGN UNITS: INCH
THIRD ANGLE PROJECTION

DRAWN BY: AAB DATE: 1989/05/15
CHECKED BY: MJM DATE: 1989/05/15
APPROVED BY: MLONG DATE: 2010/02/18

TITLE: 2MM DUAL ROW VERTICAL RECEPTACLE, SMT

MOLEX INCORPORATED

MATERIAL NO.: SEE TABLE
DOCUMENT NO.: SDA-79109-****
SHEET NO.: 6 OF 10
SIZE: A3

THIS DRAWING CONTAINS INFORMATION THAT IS PROPRIETARY TO MOLEX INCORPORATED AND SHOULD NOT BE USED WITHOUT WRITTEN PERMISSION

ASSEMBLIES WITH PEGS
VOIDED CIRCUIT OPTION

CKT. SIZE	ASSEMBLY (WITHOUT CAP IN TUBE) ITEM NO.	VOID LOCATION(S) SEE SHEET 1 FOR CONVENTION ROW	CKT. NO.(s)	PLATING OPTION	DIM. "A" INCH	DIM. "A" MM	DIM. "B" INCH	DIM. "B" MM	DIM. "C" INCH	DIM. "C" MM	DIM. "D" INCH	DIM. "D" MM
48	79109-6011	ROW A	1, 24	5	1.811	(46.00)	1.897	(48.19)	1.732	(44.00)	.183	(4.65)
44	79109-6012	ROW B	10	5	1.654	(42.00)	1.740	(44.19)	1.575	(42.00)	.183	(4.65)

NOTES:
1. TERMINALS WILL BE PRESENT IN VOIDED LOCATIONS. HOWEVER, PIN WINDOWS WILL BE CLOSED.
2. VOIDS CAN ONLY BE PRESENT IN ONE ROW OF A CONNECTOR.

REVISED
EC NO: S2010-0566 2010/01/05
DRWN:SKANG 2010/02/03
CH'KD:ATSEE 2010/02/19
APPR:MLONG
M6
DESCRIPTION
REV

QUALITY SYMBOLS
F_A=0
F_C=0
F_P=0

GENERAL TOLERANCES (UNLESS SPECIFIED)

	mm	INCH
4 PLACES	± ---	± ---
3 PLACES	± ---	± .010
2 PLACES	± 0.25	± .015
1 PLACE	± 0.38	± ---
ANGULAR ± 3 °		

DRAFT WHERE APPLICABLE MUST REMAIN WITHIN DIMENSIONS

DIMENSION STYLE: IN/MM
SCALE: NTS
DESIGN UNITS: INCH
THIRD ANGLE PROJECTION

DRAWN BY: AAB DATE: 1989/05/15
CHECKED BY: MJM DATE: 1989/05/15
APPROVED BY: MLONG DATE: 2010/02/18
MATERIAL NO.: SEE TABLE
SIZE: A3

TITLE: 2MM DUAL ROW VERTICAL RECEPTACLE, SMT

molex MOLEX INCORPORATED

DOCUMENT NO.: SDA-79109-****
SHEET NO.: 7 OF 10

THIS DRAWING CONTAINS INFORMATION THAT IS PROPRIETARY TO MOLEX INCORPORATED AND SHOULD NOT BE USED WITHOUT WRITTEN PERMISSION

SPECIAL - CUSTOM TERMINAL FEET

PEG OPTION

	DIM. "A"		DIM. "B"		DIM. "C"		DIM. "D"		PLATING OPTION 5					
CKT. SIZE	INCH	MM	INCH	MM	INCH	MM	INCH	MM	ITEM NO. TUBE PACKED (WITHOUT CAP)		ITEM NO. TAPE PACKED (WITH CAP A)		ITEM NO. TUBE PACKED (WITH CAP A)	
04	.079	(2.00)	.165	(4.19)	-	-	.185	(4.70)	X	-	X	79109-8751	X	-
06	.157	(4.00)	.244	(6.19)	.079	(2.00)	.185	(4.70)	X	-	X	79109-8752	X	-
08	.236	(6.00)	.322	(8.19)	.157	(4.00)	.185	(4.70)	X	-	X	79109-8753	X	-
10	.315	(8.00)	.401	(10.19)	.236	(6.00)	.185	(4.70)	X	-	X	79109-8754	X	-
12	.394	(10.00)	.480	(12.19)	.315	(8.00)	.185	(4.70)	X	-	X	79109-8755	X	-
14	.472	(12.00)	.559	(14.19)	.394	(10.00)	.185	(4.70)	X	-	X	79109-8756	X	-
16	.551	(14.00)	.637	(16.19)	.472	(12.00)	.185	(4.70)	X	-	X	79109-8757	X	-
18	.630	(16.00)	.716	(18.19)	.551	(14.00)	.185	(4.70)	X	-	X	79109-8758	X	-
20	.709	(18.00)	.795	(20.19)	.630	(16.00)	.185	(4.70)	X	-	X	79109-8759	X	-
22	.787	(20.00)	.874	(22.19)	.709	(18.00)	.185	(4.70)	X	-	X	79109-8760	X	-
24	.866	(22.00)	.952	(24.19)	.787	(20.00)	.185	(4.70)	X	-	X	79109-8761	X	-
26	.945	(24.00)	1.031	(26.19)	.866	(22.00)	.185	(4.70)	X	-	X	79109-8762	X	-
28	1.024	(26.00)	1.110	(28.19)	.945	(24.00)	.185	(4.70)	X	-	X	79109-8763	X	-
30	1.102	(28.00)	1.188	(30.19)	1.024	(26.00)	.185	(4.70)		79109-7010		79109-8764	X	79109-7065
32	1.181	(30.00)	1.267	(32.19)	1.102	(28.00)	.185	(4.70)	X	-	X	79109-8765	X	-
34	1.260	(32.00)	1.346	(34.19)	1.181	(30.00)	.185	(4.70)	X	-	X	79109-8766	X	-
36	1.338	(34.00)	1.425	(36.19)	1.260	(32.00)	.185	(4.70)	X	-	X	79109-8767	X	-
38	1.417	(36.00)	1.504	(38.19)	1.338	(34.00)	.185	(4.70)	X	-	X	79109-8768	X	-
40	1.496	(38.00)	1.582	(40.19)	1.417	(36.00)	.185	(4.70)	X	-	X	79109-8769	X	-
42	1.575	(40.00)	1.661	(42.19)	1.496	(38.00)	.185	(4.70)	X	-	X	N.A.	X	-
44	1.654	(42.00)	1.740	(44.19)	1.575	(40.00)	.185	(4.70)		79109-7016	X	N.A.	X	-
46	1.732	(44.00)	1.818	(46.19)	1.654	(42.00)	.185	(4.70)	X	-	X	N.A.	X	-
48	1.811	(46.00)	1.897	(48.19)	1.732	(44.00)	.185	(4.70)	X	-	X	N.A.	X	-
50	1.890	(48.00)	1.976	(50.19)	1.811	(46.00)	.185	(4.70)		79109-7015	X	N.A.	X	-

"X" INDICATES TOOLING NOT AVAILABLE

REVISED
EC NO: S2010-0566 2010/01/05
DRWN:SKANG 2010/02/03
CH'KD:ATSEE
APPR:MLONG 2010/02/19
M6
REV DESCRIPTION

QUALITY SYMBOLS
F/A=0
F/C=0
F/B=0

GENERAL TOLERANCES (UNLESS SPECIFIED)

	mm	INCH
4 PLACES	± ---	± ---
3 PLACES	± ---	± .010
2 PLACES	± 0.25	± .015
1 PLACE	± 0.38	± ---
ANGULAR ± 3 °		

DRAFT WHERE APPLICABLE MUST REMAIN WITHIN DIMENSIONS

DIMENSION STYLE: IN/MM
SCALE: NTS
DESIGN UNITS: INCH
THIRD ANGLE PROJECTION

DRAWN BY: AAB DATE: 1989/05/15
CHECKED BY: MJM DATE: 1989/05/15
APPROVED BY: MLONG DATE: 2010/02/18
MATERIAL NO.: SEE TABLE
SIZE: A3

TITLE: 2MM DUAL ROW VERTICAL RECEPTACLE, SMT

molex MOLEX INCORPORATED

DOCUMENT NO.: SDA-79109-****
SHEET NO.: 8 OF 10

THIS DRAWING CONTAINS INFORMATION THAT IS PROPRIETARY TO MOLEX INCORPORATED AND SHOULD NOT BE USED WITHOUT WRITTEN PERMISSION

SPECIAL - CUSTOM TERMINAL FEET

VOIDED CIRCUIT OPTION

CKT. SIZE	ASSEMBLY				VOID LOCATION(S) SEE SHEET 1 FOR CONVENTION		PLATING OPTION	DIM. "A"		DIM. "B"		DIM. "C"		DIM. "D"		PEG OPTION
	ITEM NO. TUBE PACKED (WITHOUT CAP)		ITEM NO. TAPE PACKED (WITH CAP A)		ROW	CKT. NO.(S)		INCH	MM	INCH	MM	INCH	MM	INCH	MM	
48		79109-7011	X	79109-8385	ROW A	1, 24	5	1.811	(46.00)	1.897	(48.19)	1.732	(44.00)	.185	(4.70)	YES
42		79109-7012	X	79109-8386	ROW A	1, 21	5	1.575	(40.00)	1.661	(42.19)	1.496	(38.00)	.185	(4.70)	YES
20		79109-7013		79109-8387	ROW A	1, 10	5	.709	(18.00)	.795	(20.19)	.630	(16.00)	.185	(4.70)	YES
50		79109-7014	X	79109-8388	ROW B	13	5	1.890	(48.00)	1.976	(50.19)	1.811	(46.00)	.185	(4.70)	YES
50		79109-7017		79109-8988	ROW B	13	5	1.890	(48.00)	1.976	(50.19)	1.811	(46.00)	.185	(4.70)	NO

X INDICATES TOOLING IS NOT AVAILABLE

NOTES:

1. TERMINALS WILL BE PRESENT IN VOIDED LOCATIONS. HOWEVER, PIN WINDOWS WILL BE CLOSED.
2. VOIDS CAN ONLY BE PRESENT IN ONE ROW OF A CONNECTOR.

REVISED
EC NO: S2010-0566 2010/01/05
DRWN:SKANG 2010/02/03
CH'KD:ATSEE
APPR:MLONG 2010/02/19
DESCRIPTION
REV
M6

QUALITY SYMBOLS
F/A=0
F/C=0
F/P=0

GENERAL TOLERANCES (UNLESS SPECIFIED)

	mm	INCH
4 PLACES	± ---	± ---
3 PLACES	± ---	± .010
2 PLACES	± 0.25	± .015
1 PLACE	± 0.38	± ---
ANGULAR ± 3 °		

DRAFT WHERE APPLICABLE MUST REMAIN WITHIN DIMENSIONS

DIMENSION STYLE: IN/MM
SCALE: NTS
DESIGN UNITS: INCH
THIRD ANGLE PROJECTION

DRAWN BY: AAB DATE: 1989/05/15
CHECKED BY: MJM DATE: 1989/05/15
APPROVED BY: MLONG DATE: 2010/02/18
MATERIAL NO.: SEE TABLE
SIZE: A3

TITLE: 2MM DUAL ROW VERTICAL RECEPTACLE, SMT

molex MOLEX INCORPORATED

DOCUMENT NO.: SDA-79109-****
SHEET NO.: 9 OF 10

THIS DRAWING CONTAINS INFORMATION THAT IS PROPRIETARY TO MOLEX INCORPORATED AND SHOULD NOT BE USED WITHOUT WRITTEN PERMISSION

SPECIAL - ASSEMBLIES WITH CAP B (TAPE PACKED WITH CAP)

PEG OPTION

CKT. SIZE	DIM. "A" INCH	DIM. "A" MM	DIM. "B" INCH	DIM. "B" MM	DIM. "C" INCH	DIM. "C" MM	DIM. "D" INCH	DIM. "D" MM	DIM. "E" INCH	DIM. "E" MM	ITEM NO.	PLATING OPTION SEE SHEET 1
8	.236	(6.00)	.322	(8.19)	.157	(4.00)	.183	(4.65)	.065	(1.65)	79109-9108	4
18	.630	(16.00)	.716	(18.19)	.551	(14.00)	.183	(4.65)	.262	(6.65)	79109-9118	4

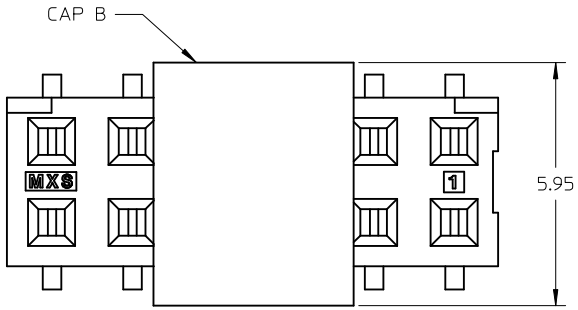

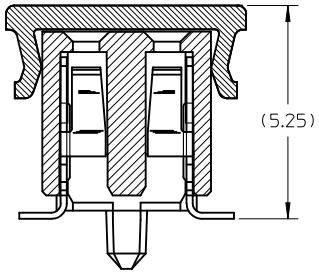

SECTION C-C

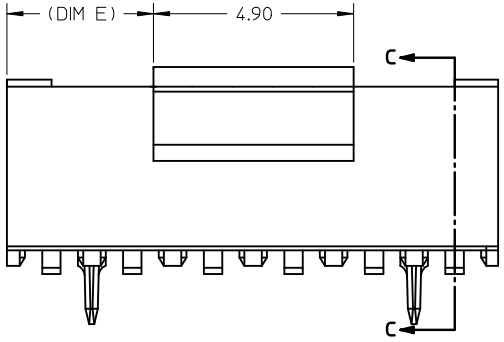

REVISED
EC NO: S2010-0566
DRWN:SKANG 2010/01/05
CH'KD:ATSEE 2010/02/03
APPR:MLONG 2010/02/19
M6

REV | DESCRIPTION

QUALITY SYMBOLS
F_A=0
F_C=0
F_P=0

GENERAL TOLERANCES (UNLESS SPECIFIED)

	mm	INCH
4 PLACES	± ---	± ---
3 PLACES	± ---	± .010
2 PLACES	± 0.25	± .015
1 PLACE	± 0.38	± ---

ANGULAR ± 3 °

DRAFT WHERE APPLICABLE MUST REMAIN WITHIN DIMENSIONS

DIMENSION STYLE: IN/MM
SCALE: NTS
DESIGN UNITS: INCH
THIRD ANGLE PROJECTION

DRAWN BY: AAB DATE: 1989/05/15
CHECKED BY: MJM DATE: 1989/05/15
APPROVED BY: MLONG DATE: 2010/02/18

TITLE: 2MM DUAL ROW VERTICAL RECEPTACLE, SMT

molex MOLEX INCORPORATED

MATERIAL NO.: SEE TABLE
DOCUMENT NO.: SDA-79109-****
SHEET NO.: 10 OF 10
SIZE: A3

THIS DRAWING CONTAINS INFORMATION THAT IS PROPRIETARY TO MOLEX INCORPORATED AND SHOULD NOT BE USED WITHOUT WRITTEN PERMISSION