Online data sheet

LFV330-CAGAVXPN0550

LFV300

LEVEL SENSORS

SICK
Sensor Intelligence.

Illustration may differ

Ordering information

Type	Part no.
LFV330-CAGAVXPN0550	6042300

Other models and accessories → www.sick.de/LFV300

Detailed technical data

Features

Medium	Fluids
Measurement	Switch
Probe length	550 mm
Process pressure	–1 bar ... 64 bar
Process temperature	–50 °C ... +150 °C
Fill material density	0.5 g/cm³ ... 2.5 g/cm³
ATEX approval	ATEX II 1G, II 1/2G, II 2G Ex ia IIC T6 Ga, Ga/Gb, Gb
Type examination	TÜV 09 ATEX 372528 X
GOST approval	✓
WHG approval	✓
Authorizations	WHG approval

Performance

Accuracy of sensor element	± 2 mm
Repeatability	≤ 1 mm
Viscosity	0.1 mPas ... 10,000 mPas
Response time	500 ms

Electronics

Power consumption	1 mA / 2,5 mA
Initialization time	< 2 s
VDE protection class 2	✓
Electrical connection	M20 x 1.5
Supply voltage	NAMUR signal: 4.5 V DC ... 12 V DC
Hysteresis	2 mm
Output current	1 mA / 2,5 mA
Enclosure rating	IP 66 / IP 67

Temperature drift	0,03 mm/K

Mechanics

Wetted parts	Stainless steel 316L (optional Ra ≤ 0.8 µm)
Process connection	G 1 A PN 64
Housing material	Plastic
Sensor material	Stainless steel 1.4404

Ambient data

Ambient operating temperature	–40 °C ... +70 °C
Ambient storage temperature	–40 °C ... +80 °C

Dimensional drawing (Dimensions in mm (inch))

LFV330

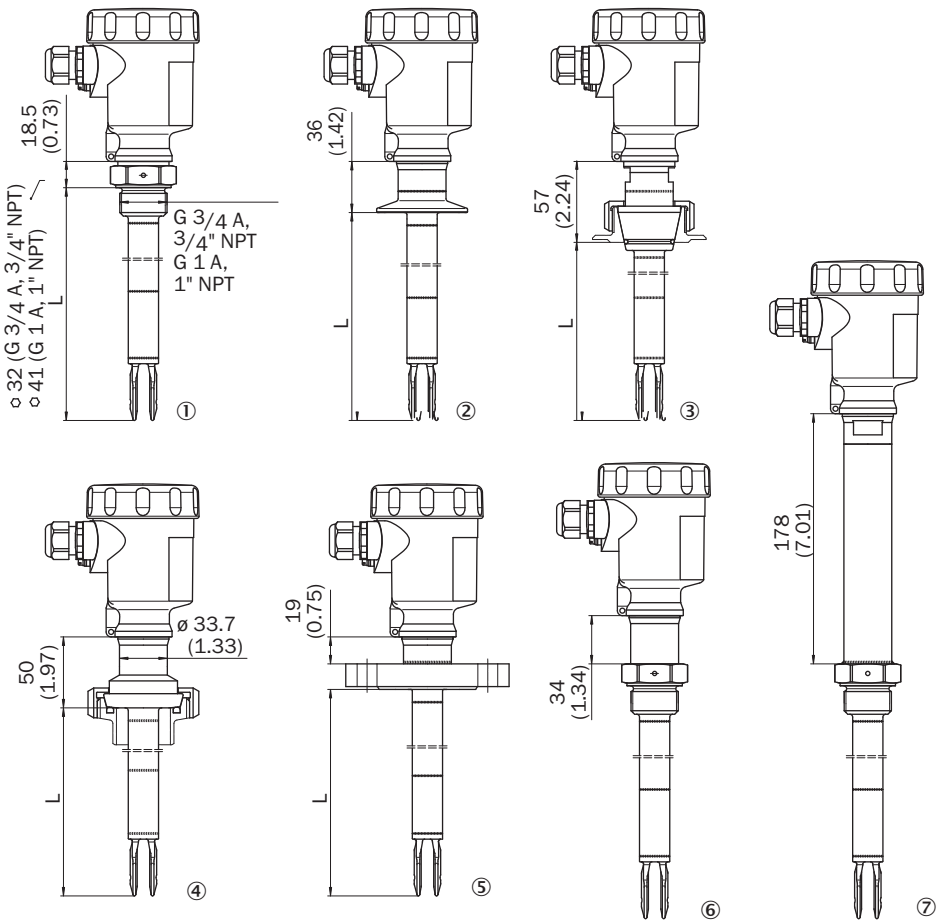

① Thread
② Tri-Clamp
③ DN 25 cone
④ Bolting D 40
⑤ Flange
⑥ Gas-tight leadthrough
⑦ Temperature adapter

Marking on the welded flange

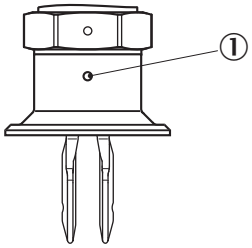

① Marking

Connection diagram

Namur connection diagram

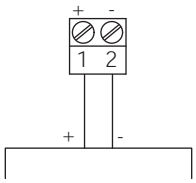

Namur - electronic module

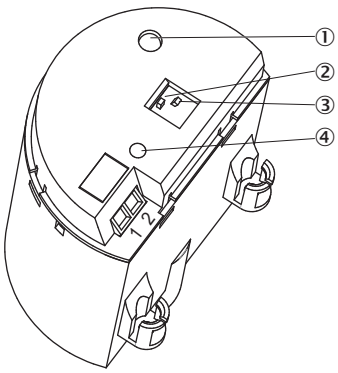

① Signal lamp (LED)
② DIL switch for characteristics reversal
③ DIL-switch for sensitivity adjustment
④ Simulation key

Instruction for installation

Inflowing medium

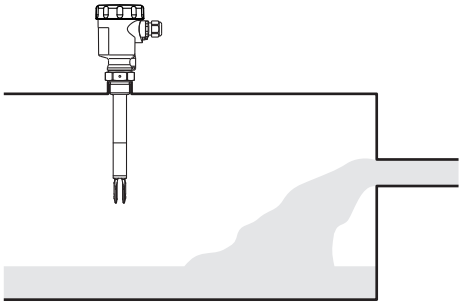

Characteristic curve

Influence of the process temperature on the switching point

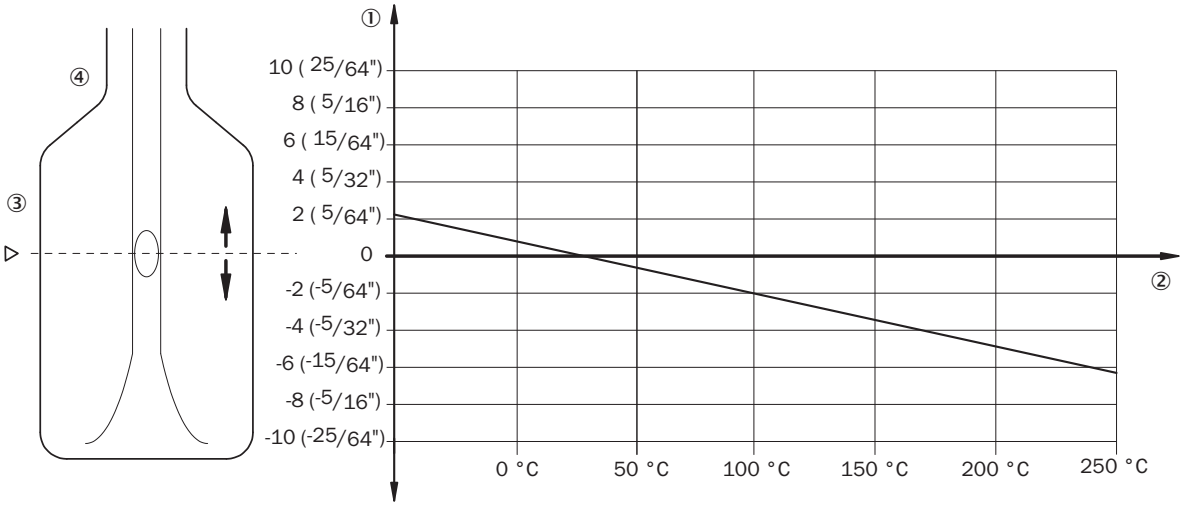

① Shifting of the switching point in mm (in)
② Process temperature in °C (°F)
③ Switching point at reference conditions (notch)
④ Tuning fork

Recommended accessories

Other models and accessories ➜ www.sick.de/LFV300

	Brief description	Type	Part no.
Flanges			
	Welded flange/welded connector, DIN11851-1, DN25 / PN40, Stainless steel 1.4404	BEF-FL-851D25-LFV2	5321527
	Welded flange/welded connector, process connection G 1, Stainless steel 1.4404	BEF-FL-GEWG10-LFV2	4054605

	Brief description	Type	Part no.
	Welded flange/welded connector, G 3/4 process connection, Stainless steel 1.4404	BEF-FL-GEWG34-LFV2	4054604
	Welded flange/welded connector, process connection Tri-Clamp 1", Stainless steel 1.4404	BEF-FL-TCLI10-LFV2	5321678
	Welded flange/welded connector, process connection Tri-Clamp 2”, Stainless steel 1.4404	BEF-FL-TCLI20-LFV2	5321679
Mounting brackets and mounting plates			
	Lock nut fitting, process pressure –1 bar to 64 bar, G 1 A process connection, G 3/4 A female thread, stainless steel 316L	BEF-MU-316G10-ALFV	5322463
Electronic modules			
	Namur signal: 4.5 V DC ... 12 V DC	ECD-RE-LFV-NAM-0001	6038670

USmod 4c int43

Australia
Phone +61 3 9457 0600
1800 33 48 02 – tollfree
E-Mail sales@sick.com.au

Belgium/Luxembourg
Phone +32 (0)2 466 55 66
E-Mail info@sick.be

Brasil
Phone +55 11 3215-4900
E-Mail marketing@sick.com.br

Canada
Phone +1 905 771 14 44
E-Mail information@sick.com

Česká republika
Phone +420 2 57 91 18 50
E-Mail sick@sick.cz

China
Phone +86 4000 121 000
E-Mail info.china@sick.net.cn
Phone +852-2153 6300
E-Mail ghk@sick.com.hk

Danmark
Phone +45 45 82 64 00
E-Mail sick@sick.dk

Deutschland
Phone +49 211 5301-301
E-Mail info@sick.de

España
Phone +34 93 480 31 00
E-Mail info@sick.es

France
Phone +33 1 64 62 35 00
E-Mail info@sick.fr

Great Britain
Phone +44 (0)1727 831121
E-Mail info@sick.co.uk

India
Phone +91–22–4033 8333
E-Mail info@sick-india.com

Israel
Phone +972-4-6801000
E-Mail info@sick-sensors.com

Italia
Phone +39 02 27 43 41
E-Mail info@sick.it

Japan
Phone +81 (0)3 5309 2112
E-Mail support@sick.jp

Magyarország
Phone +36 1 371 2680
E-Mail office@sick.hu

Nederland
Phone +31 (0)30 229 25 44
E-Mail info@sick.nl

Norge
Phone +47 67 81 50 00
E-Mail sick@sick.no

Österreich
Phone +43 (0)22 36 62 28 8-0
E-Mail office@sick.at

Polska
Phone +48 22 837 40 50
E-Mail info@sick.pl

România
Phone +40 356 171 120
E-Mail office@sick.ro

Russia
Phone +7-495-775-05-30
E-Mail info@sick.ru

Schweiz
Phone +41 41 619 29 39
E-Mail contact@sick.ch

Singapore
Phone +65 6744 3732
E-Mail sales.gsg@sick.com

Slovenija
Phone +386 (0)1-47 69 990
E-Mail office@sick.si

South Africa
Phone +27 11 472 3733
E-Mail info@sickautomation.co.za

South Korea
Phone +82 2 786 6321/4
E-Mail info@sickkorea.net

Suomi
Phone +358-9-25 15 800
E-Mail sick@sick.fi

Sverige
Phone +46 10 110 10 00
E-Mail info@sick.se

Taiwan
Phone +886-2-2375-6288
E-Mail sales@sick.com.tw

Türkiye
Phone +90 (216) 528 50 00
E-Mail info@sick.com.tr

United Arab Emirates
Phone +971 (0) 4 8865 878
E-Mail info@sick.ae

USA/México
Phone +1(952) 941-6780
1 800-325-7425 – tollfree
E-Mail info@sickusa.com

More representatives and agencies at **www.sick.com**