LM26400Y Dual 2A, 500kHz Wide Input Range Buck Regulator

Check for Samples: LM26400Y

FEATURES

- **Input voltage range of 3-20V**
- **Dual 2A output**
- **Output voltage down to 0.6V**
- **Internal compensation**
- **500kHz PWM frequency**
- **Separate enable pins**
- **Separate soft start pins**
- **Frequency foldback protection**
- **175mΩ NMOS switch**
- **Integrated bootstrap diodes**
- **Over-current protection**
- **ETSSOP and LLP packages**
- **Thermal shutdown**

APPLICATIONS

- **DTV-LCD**
- **Set-Top Box**
- **XDSL**
- **Automotive**
- **Computing Peripherals**
- **Industrial Controls**
- **Point of Load**

DESCRIPTION

The LM26400Y is a monolithic, two-output fixed frequency PWM step-down DC/DC regulator in a 16-pin LLP or thermally enhanced ETSSOP package. With a minimum number of external components and internal loop compensation, the LM26400Y is easy to use. The ability to drive 2A loads with an internal 175mΩ NMOS switch using state-of-the-art 0.5µm BiCMOS technology results in a high-power density design. The world class control circuitry allows for an ON-time as low as 40 ns, thus supporting high-frequency conversion over the entire input range of 3V to 20V and down to an output voltage of only 0.6V. The LM26400Y utilizes peak current-mode control and internal compensation to provide high-performance regulation over a wide range of line and load conditions. Switching frequency is internally set to 500kHz, optimal for a broad range of applications in terms of size versus thermal tradeoffs. Given a non-synchronous architecture, efficiencies above 90% are easy to achieve. External shutdown is included, enabling separate turn-on and turn-off of the two channels. Additional features include programmable soft-start circuitry to reduce inrush current, pulse-by-pulse current limit and frequency foldback, integrated bootstrap structure and thermal shutdown.

Typical Application

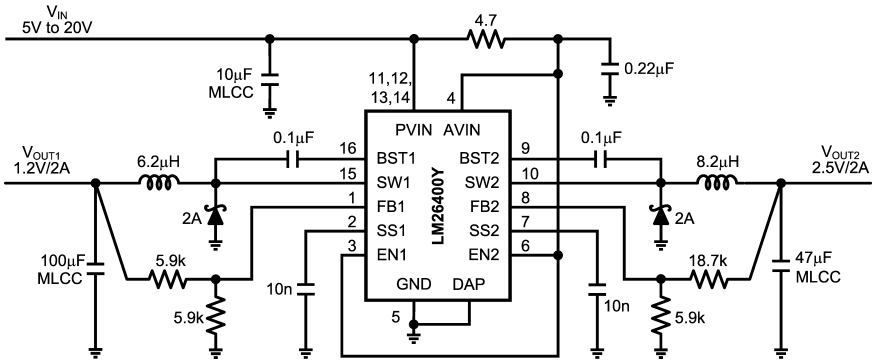

Please be aware that an important notice concerning availability, standard warranty, and use in critical applications of Texas Instruments semiconductor products and disclaimers thereto appears at the end of this data sheet.

All trademarks are the property of their respective owners.

PRODUCTION DATA information is current as of publication date. Products conform to specifications per the terms of the Texas Instruments standard warranty. Production processing does not necessarily include testing of all parameters.

Copyright © 2007, Texas Instruments Incorporated

Connection Diagram

16-Lead ETSSOP (top view)

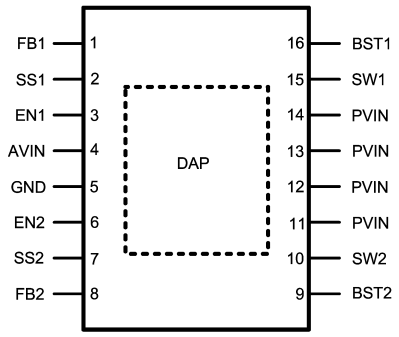

Figure 1. NS Package Drawing MXA16A

16-Lead LLP (top view)

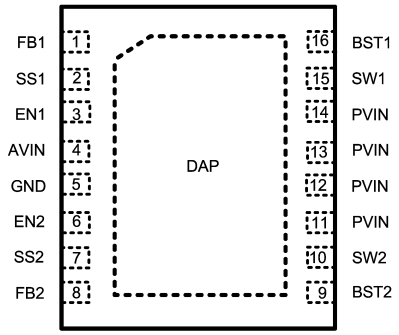

Figure 2. NS Package Drawing SDA16A

Pin Functions

Pin Descriptions

Pin	Name	Description
1	FB1	Feedback pin of Channel 1. Connect FB1 to an external voltage divider to set the output voltage of Channel 1.
2	SS1	Soft start pin of Channel 1. Connect a capacitor between this pin and ground to program the start up speed.
3	EN1	Enable control input for Channel 1. Logic high enables operation. Do not allow this pin to float or be greater than V_{IN} + 0.3V.
4	AVIN	Input supply for generating the internal bias used by the entire IC and for generating the internal bootstrap bias. Needs to be locally bypassed.
5	GND	Signal and Power ground pin. Kelvin connect the lower resistor of the feedback voltage divider to this pin for good load regulation.
6	EN2	Enable control input for Channel 2. Logic high enables operation. Do not allow this pin to float or be greater than V_{IN} + 0.3V.
7	SS2	Soft start pin of Channel 2. Connect a capacitor between this pin and ground to program the start up speed.
8	FB2	Feedback pin of Channel 2. Connect FB2 to an external voltage divider to set the output voltage of Channel 2.
9	BST2	Supply rail for the gate drive of Channel 2's NMOS switch. A bootstrap capacitor should be placed between the BST2 and SW2 pins.
10	SW2	Switch node of Channel 2. Connects to the inductor, catch diode, and bootstrap capacitor.

Copyright © 2007, Texas Instruments Incorporated

Pin Descriptions (continued)

Pin	Name	Description
11, 12, 13,14	PVIN	Input voltage of the power supply. Directly connected to the drain of the internal NMOS switch. Tie these pins together and connect to a local bypass capacitor.
15	SW1	Switch node of Channel 1. Connects to the inductor, catch diode, and bootstrap capacitor.
16	BST1	Supply rail for the gate drive of Channel 1's NMOS switch. A bootstrap capacitor should be placed between the BST1 and SW1 pins.
DAP	Die Attach Pad	Must be connected to system ground for low thermal impedance and low grounding inductance.

These devices have limited built-in ESD protection. The leads should be shorted together or the device placed in conductive foam during storage or handling to prevent electrostatic damage to the MOS gates.

Absolute Maximum Ratings (1)

AVIN, PVIN	−0.5V to 22V
SWx Voltage	−0.5V to 22V
BSTx Voltage	−0.5V to 26V
BSTx to SW Voltage	−0.5V to 6V
FBx Voltage	−0.5V to 3V
ENx Voltage (2)	−0.5V to 22V
SSx Voltage	−0.5V to 3V
Junction Temperature	+150°C
ESD Susceptibility	
Human Body Model (3)	2kV
Storage Temperature Range	-65°C to 150°C

(1) Absolute maximum ratings indicate limits beyond which damage to the device may occur. Operating Ratings are conditions under which the device is intended to be functional, but specific performance is not guaranteed. For guaranteed performance limits and associated test conditions, see Electrical Characteristics table.
(2) EN1 and EN2 pins should never be higher than V_{IN} + 0.3V.
(3) The human body model is a 100pF capacitor discharged through a 1.5 kΩ resistor into each pin. Test method is per JESD-22-A114.

Operating Ratings (1)

V_{IN}	3V to 20V
Junction Temperature	−40°C to +125°C

(1) Absolute maximum ratings indicate limits beyond which damage to the device may occur. Operating Ratings are conditions under which the device is intended to be functional, but specific performance is not guaranteed. For guaranteed performance limits and associated test conditions, see Electrical Characteristics table.

Copyright © 2007, Texas Instruments Incorporated

Electrical Characteristics

Unless otherwise stated, the following conditions apply: AVIN = PVIN = V_{IN} = 5V. Limits in standard type are for T_J = 25°C only; limits in **boldfacetype** apply over the junction temperature (T_J) range of -40°C to 125°C. Minimum and Maximum limits are guaranteed through test, design, or statistical correlation. Typical values represent the most likely parametric norm at T_J = 25°C, and are provided for reference purposes only.

Symbol	Parameter	Conditions	Min	Typ	Max	Units
V_{FB}	Voltages at FB1 and FB2 Pins	0°C to 85°C. Feedback Loop Closed.	**0.591**	0.6	**0.611**	V
		-40°C to 125°C. Feedback Loop V Closed.	**0.585**		**0.617**	
ΔV_{FB_Line}	Line Regulation of FB1 and FB2 Voltages, Expressed as PPM Change Per Volt of V_{IN} Variation	V_{IN} = 3V to 20V		66		ppm/V
I_{FB}	Current in FB1 and FB2 Pins	V_{FB} = 0.6V		0.4	**250**	nA
V_{UVLO}	Under Voltage Lockout Threshold	V_{IN} Rising From 0V		2.7	**2.9**	V
		V_{IN} Falling From 3.3V	**2.0**	2.3		
V_{UVLO_HYS}	UVLO Hysteresis		**0.2**	0.36	**0.55**	V
F_{SW}	Switching Frequency		**0.39**	0.52	**0.65**	MHz
D_{MAX}	Maximum Duty Cycle		**90**	96		%
D_{MIN}	Minimum Duty Cycle			2		%
$R_{DS(ON)}$	ON Resistance of Internal Power MOSFET	ETSSOP, 2A Drain Current		175	**320**	mΩ
		LLP, 2A Drain Current		194	**350**	
I_{CL}	Peak Current Limit of Internal MOSFET		**2.5**	3	**4.5**	A
I_{SD}	Shutdown Current of AVIN Pin	EN1 = EN2 = 0V		2		nA
I_Q	Quiescent Current of AVIN Pin (both channels are enabled but not switching)	EN1 = EN2 = 5V, FB1 = FB2 = 0.7V			**4**	mA
V_{EN_IH}	Input Logic High of EN1 and EN2 Pins		**2.5**			V
V_{EN_IL}	Input Logic Low of EN1 and EN2 Pins				**0.4**	V
I_{EN}	EN1 and EN2 Currents (sink or source)			5		nA
I_{SW_LEAK}	Switch Leakage Current Measured at SW1 and SW2 Pins	EN1 = EN2 = SWx = 0		1		µA
ΔΦ	Phase Shift Between SW1 and SW2 Rising Edges	Feedback Loop Closed. Continuous Conduction Mode.	170	180	19	deg
I_{SS}	SSx Pin Current		**11**	16	**21**	µA
ΔI_{SS}	Difference Between SS1 and SS2 Currents				**3**	µA
V_{FB_F}	FB1 and FB2 Frequency Fold-back Threshold			0.35		V

Copyright © 2007, Texas Instruments Incorporated

Thermal Characteristics

Symbol	Description	Conditions	Typical Value		Unit
			TSSOP	LLP	
θ_{JA}	Junction-to-Ambient Thermal Resistance (1)	Mount package on a standard board (2) and test per JESD51-7 standard.	28	26	°C/W
θ_{JC}	Junction-to-Case-Bottom Thermal Resistance		3	2.8	
T_{SD}	Thermal Shutdown Threshold	Junction temperature rises.	165		°C
T_{SD_HYS}	Thermal Shutdown Hysteresis	Junction temperature falls from above T_{SD}.	15		

(1) Value is highly board-dependent. For comparison of package thermal performance only. Not recommended for prediction of junction temperature in real applications. See THERMAL CONSIDERATIONS for more information.
(2) A standard board refers to a four-layer PCB with the size 4.5”x3”x0.063”. Top and bottom copper is 2 oz. Internal plane copper is 1 oz. For details refer to JESD51-7 standard.

Copyright © 2007, Texas Instruments Incorporated

Typical Performance Characteristics

Unless otherwise specified or thermal-shutdown related, T_A = 25°C for efficiency curves, loop gain plots and waveforms, and T_J = 25°C for all others.

Efficiency, V_{OUT} = 5V

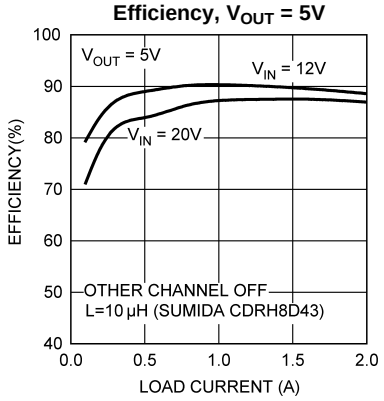

Efficiency, V_{OUT} = 3.3V

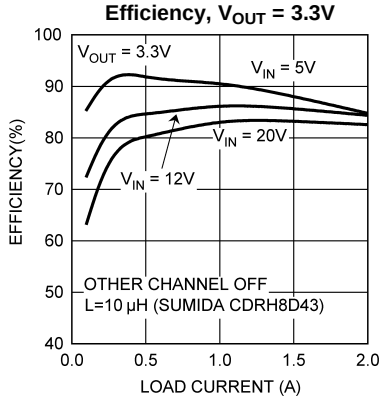

Efficiency, V_{OUT} = 2.5V

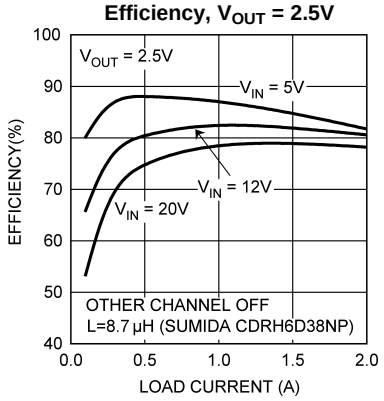

Efficiency, V_{OUT} = 1.2V

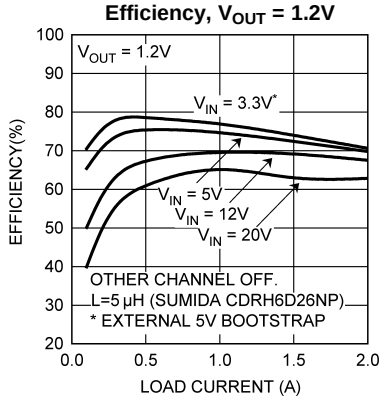

AVIN Shutdown Current vs. Temperature

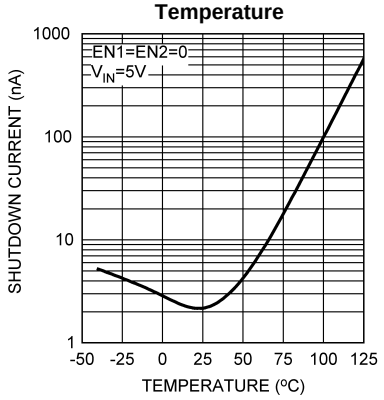

V_{IN} Shutdown Current vs. V_{IN}

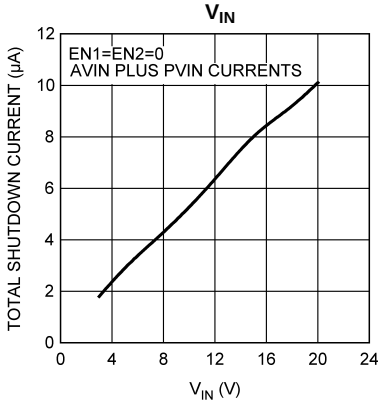

Copyright © 2007, Texas Instruments Incorporated

Typical Performance Characteristics (continued)

Unless otherwise specified or thermal-shutdown related, T_A = 25°C for efficiency curves, loop gain plots and waveforms, and T_J = 25°C for all others.

Switching Frequency vs. Temperature

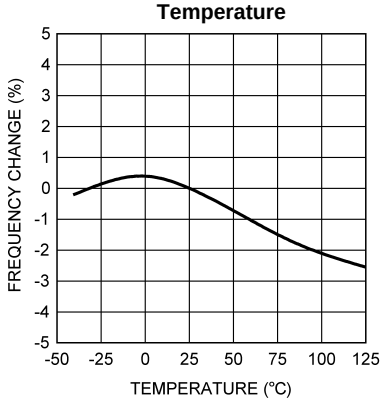

Feedback Voltage vs. Temperature

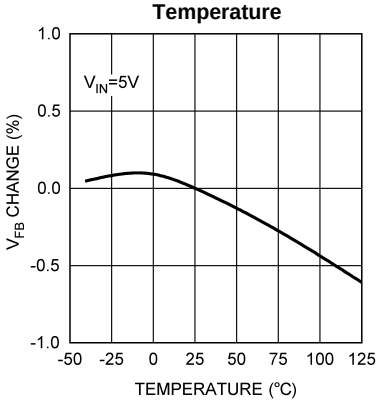

Feedback Voltage vs. V_{IN}

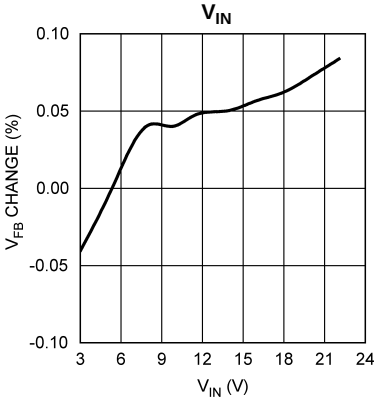

Frequency Foldback

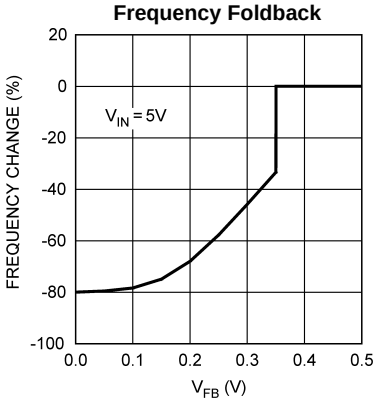

SS-Pin Current vs. Temperature

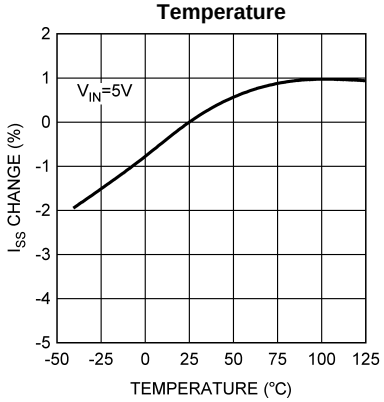

FET R_{DS_ON} vs. Temperature

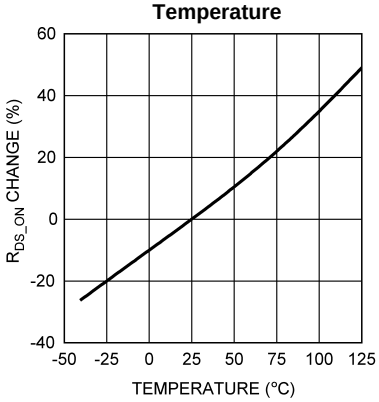

Typical Performance Characteristics (continued)

Unless otherwise specified or thermal-shutdown related, T_A = 25°C for efficiency curves, loop gain plots and waveforms, and T_J = 25°C for all others.

Switch Current Limit vs. Temperature

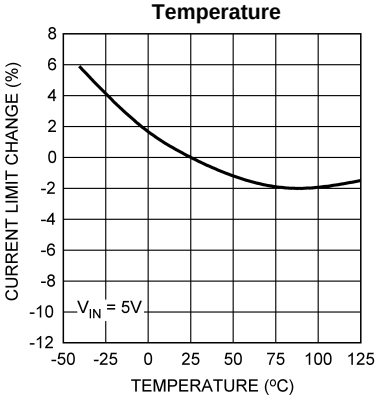

Loop Gain, CCM

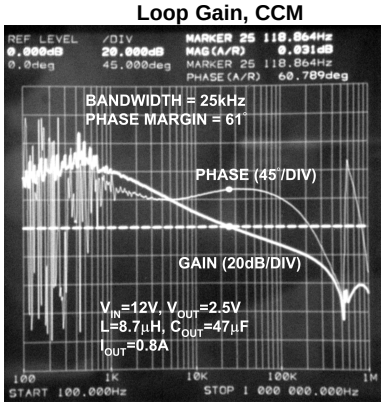

Loop Gain, DCM

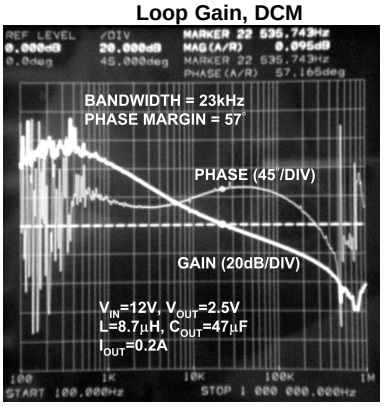

Loop Gain, CCM

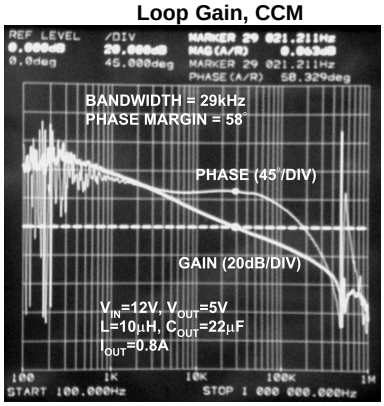

Loop Gain, DCM

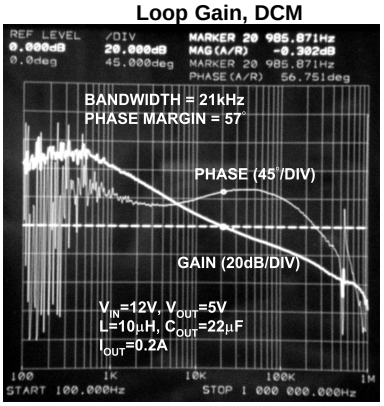

Load Step Response

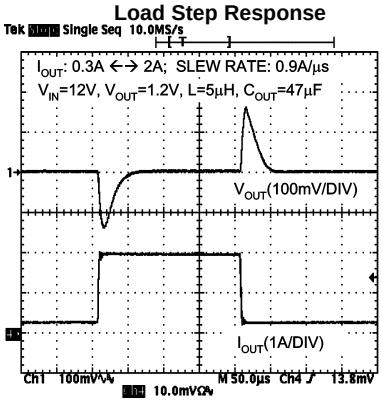

Copyright © 2007, Texas Instruments Incorporated

Typical Performance Characteristics (continued)

Unless otherwise specified or thermal-shutdown related, T_A = 25°C for efficiency curves, loop gain plots and waveforms, and T_J = 25°C for all others.

Load Step Response

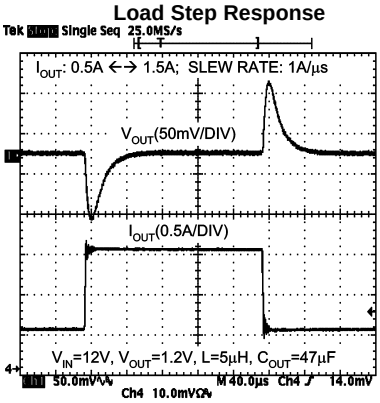

Line Transient Response

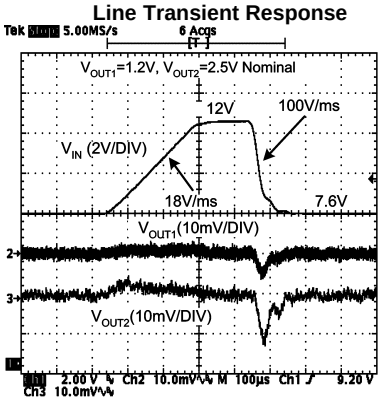

Start-Up (No Load)

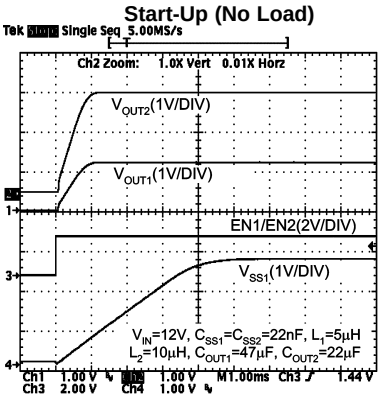

Start-Up (No Load)

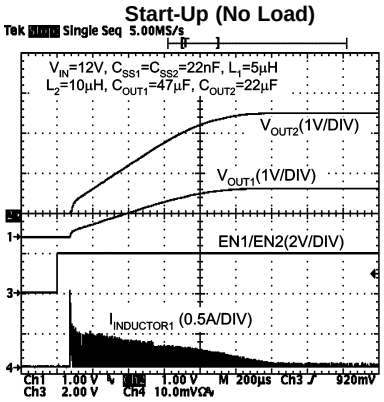

Shutdown

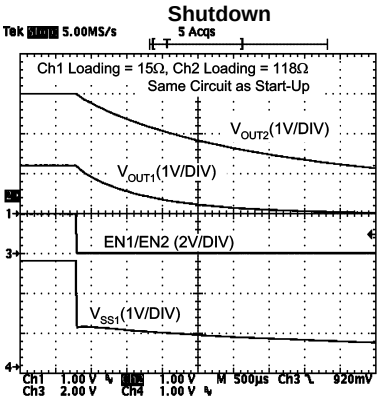

Thermal Shutdown

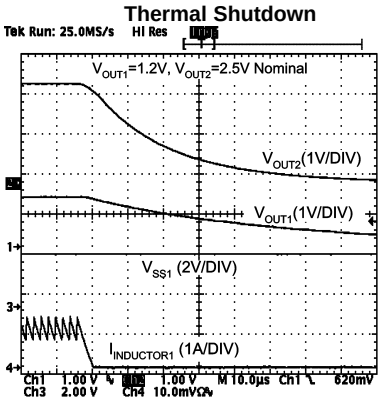

Recovery from Thermal Shutdown

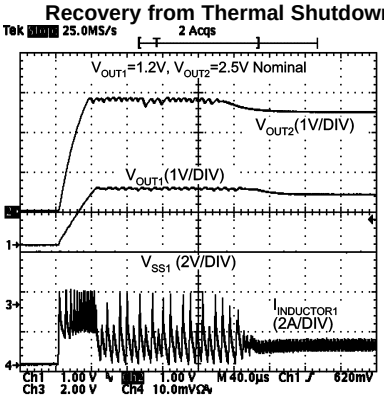

Short-circuit Triggering

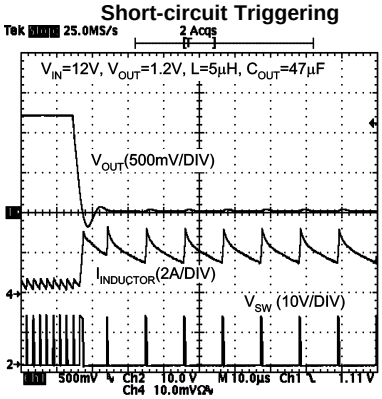

Typical Performance Characteristics (continued)

Unless otherwise specified or thermal-shutdown related, T_A = 25°C for efficiency curves, loop gain plots and waveforms, and T_J = 25°C for all others.

Short-circuit Release

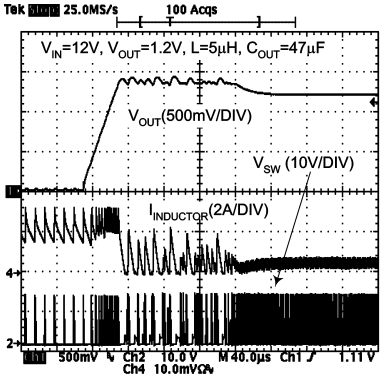

Block Diagram

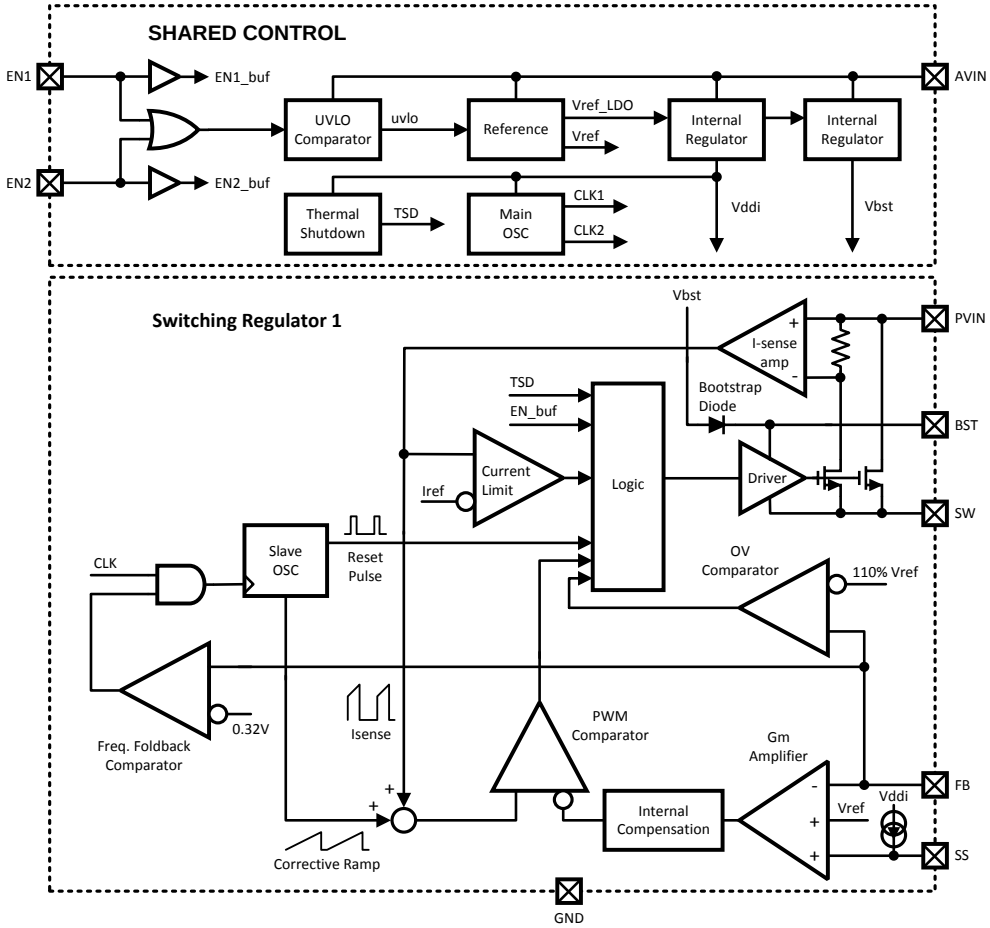

Copyright © 2007, Texas Instruments Incorporated

Application Hints

GENERAL

The LM26400Y is a dual PWM peak-current mode buck regulator with two integrated power MOSFET switches. The part is designed to be easy to use. The two regulators are mostly identical and share the same input voltage and the same reference voltage (0.6V). The two PWM clocks are of the same frequency but 180° out of phase. The two channels can have different soft-start ramp slopes and can be turned on and off independently.

Loop compensation is built in. The feedback loop design is optimized for ceramic output capacitors.

Since the power switches are built in, the achievable output current level also has to do with thermal environment of the specific application. The LM26400Y enters thermal shutdown when the junction temperature exceeds 165°C or so.

START-UP AND SHUTDOWN

During a soft-start, the ramp of the output voltage is proportional to the ramp of the SS pin. When the EN pin is pulled high, an internal 16µA current source starts to charge the corresponding SS pin. The capacitance between the SS pin and ground determines how fast the SS voltage ramps up. The non-inverting input of the transconductance error amplifier, i.e. the moving reference during soft-start, will be the lower of SS voltage and the 0.6V reference (V_{REF}). So before SS reaches 0.6V, the reference to the error amplifier will be the SS voltage. When SS exceeds 0.6V, the non-inverting input of the transconductance amplifier will be a constant 0.6V and that will be the time soft-start ends. The SS voltage will continue to ramp all the way up to the internal 2.7V supply voltage before leveling off.

To calculate the needed SS capacitance for a given soft-start duration, use the following equation.

$$C_{SS} = \frac{I_{SS} \times t_{SS}}{V_{REF}} \tag{1}$$

I_{SS} is SS pin charging current, typically 16µA. V_{REF} is the internal reference voltage, typically 0.6V. t_{SS} is the desired soft-start duration. For example, if 1ms is the desired soft-start time, then the nominal SS capacitance should be 25nF. Apply tolerances if necessary. Use the V_{FB} entry in the Electrical Characteristic table for the V_{REF} tolerance.

Inductor current during soft-start can be calculated by the following equation.

$$I_{ind} = \frac{C_{OUT}}{C_{SS}} \times \frac{V_{OUT}}{V_{REF}} \times I_{SS} + I_{OUT} \tag{2}$$

V_{OUT} is the target output voltage, I_{OUT} is the load current during start-up, and C_{OUT} is the output capacitance. For example, if the output capacitor is 10µF, output voltage is 2.5V, soft-start capacitor is 10nF and there is no load, then the average inductor current during soft-start will be 62.5mA.

When EN pin is pulled below 0.4V or so, the 16µA current source will stop charging the SS pin. The SS pin will be discharged through a 330Ω internal FET to ground. During this time, the internal power switch will remain turned off while the output is discharged by the load.

If EN is again pulled high before SS and output voltage are completely discharged, soft-start will begin with a non-zero reference and the level of the soft-start reference will be the lower of SS voltage and 0.6V.

When the output is pre-biased, the LM26400Y can usually start up successfully if there is at least a 2-Volt difference between the input voltage and the pre-bias. An output pre-bias condition refers to the case when the output is sitting at a non-zero voltage at the beginning of a start-up. The key to a successful start-up under such a situation is enough initial voltage across the bootstrap capacitor. When an output pre-bias condition is anticipated, the power supply designer should check the start-up behavior under the highest potential pre-bias.

A pre-bias condition caused by a glitch in the enable signal after start-up or by an input brown-out condition normally is not an issue because the bootstrap capacitor holds its charge much longer than the output capacitor(s).

Due to the frequency foldback mechanism, the switching frequency during start-up will be lower than the normal value before V_{FB} reaches 0.35V or so. See Frequency Foldback plot in the Typical Performance Characteristics section.

Copyright © 2007, Texas Instruments Incorporated

It is generally okay to connect the EN pin to V_{IN} to simplify the system design. However, if the V_{IN} ramp is slow and the load current is relatively high during soft-start, the V_{OUT} ramp may have a notch in it and a slight overshoot at the end of startup. This is due to the reduced load current handling capability of the LM26400Y for V_{IN} lower than 5V. If this kind of behavior is a problem for the system designer, there are two solutions. One is to control the EN pin with a logic signal and do not pull the EN high until V_{IN} is above 5V or so. Make sure the logic signal is never higher than V_{IN} by 0.3V. The other is to use an external 5V bootstrap bias if it is ready before V_{IN} hits 2.7V or so. See LOW INPUT VOLTAGE CONSIDERATIONS section for more information.

OVER-CURRENT PROTECTION

The instantaneous switch current is limited to a typical of 3 Amperes. Any time the switch current reaches that value, the switch will be turned off immediately. This will result in a smaller duty cycle than normal, which will cause the output voltage to dip. The output voltage will continue drooping until the load draws a current that is equal to the peak-limited inductor current. As the output voltage droops, the FB pin voltage will also droop proportionally. When the FB voltage dips below 0.35V or so, the PWM frequency will start to decrease. The lower the FB voltage the lower the PWM frequency. See Frequency Foldback plot in the Typical Performance Characteristics section.

The frequency foldback helps two things. One is to prevent the switch current from running away as a result of the finite minimum ON time (40 ns or so for the LM26400Y) and the small duty cycle caused by lowered output voltage due to the current limit. The other is it also helps reduce thermal stress both in the IC and the external diode.

The current limit threshold of the LM26400Y remains constant over all duty cycles.

One thing to pay attention to is that recovery from an over-current condition does not go through a soft-start process. This is because the reference voltage at the non-inverting input of the error amplifier always sits at 0.6V during the over-current protection. So if the over-current condition is suddenly removed, the regulator will bring the FB voltage back to 0.6V as quickly as possible. This may cause an overshoot in the output voltage. Generally, the larger the inductor or the lower the output capacitance the more the overshoot, and vice versa. If the amount of such overshoot exceeds the allowed limit for a system, add a C_{FF} capacitor in parallel with the upper feedback resistor to eliminate the overshoot. See the section LOAD STEP RESPONSE for more details on C_{FF}.

When one channel gets into over-current protection mode, the operation of the other channel will not be affected.

LOOP STABILITY

To the first order approximation, the LM26400Y has a V_{FB}-to-Inductor Current transfer admittance (i.e. ratio of inductor current to FB pin voltage, in frequency domain) close to the plot in Figure 3. The transfer admittance has a DC value of 104dBS (dBS stands for decibel Siemens. The equivelant of 0dBS is 1 Siemens.). There is a pole at 1Hz and a zero at approximately 8kHz. The plateau after the 8kHz zero is about 27dBS. There are also high frequency poles that are not shown in the figure. They include a double pole at 1.2MHz or so, and another double pole at half the switching frequency. Depending on factors such as inductor ripple size and duty cycle, the double pole at half the switching frequency may become two separate poles near half the switching frequency.

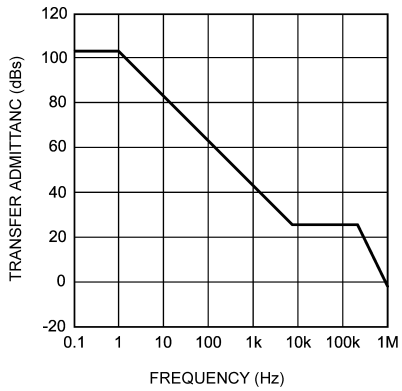

Figure 3. V_{FB}-to-Inductor Current Transfer Admittance

Copyright © 2007, Texas Instruments Incorporated

An easy strategy to build a stable loop with reasonable phase margin is to try to cross over between 20kHz and 100kHz, assuming the output capacitor is ceramic. When using pure ceramic capacitors at the output, simply use the following equation to find out the crossover frequency.

$$f_C = \frac{22S \times r}{6.28 \times C_{OUT}} \tag{3}$$

where 22S (22 Siemens) is the equivelant of the 27dBS transfer admittance mentioned above and r is the ratio of 0.6V to the output voltage. Use the same equation to find out the needed output capacitance for a given crossover frequency. Phase margin is typically between 50° and 60°. Notice the above equation is only good for a crossover between 20kHz and 100kHz. A crossover frequency outside this range may result in lower phase margin and less accurate prediction by the above equation.

Example: V_{OUT} = 2.5V, C_{OUT} = 36µF, find out the crossover frequency.

Assume the crossover is between 20kHz and 100kHz. Then

$$f_C = \frac{22S \times \frac{0.6V}{2.5V}}{6.28 \times 36\mu F} = 23\,kHz \tag{4}$$

The above analysis serves as a starting point. It is a good practice to always verify loop gain on bench.

LOAD STEP RESPONSE

In general, the excursion in output voltage caused by a load step can be reduced by increasing the output capacitance. Besides that, increasing the small-signal loop bandwidth also helps. This can be achieved by adding a 27nF or so capacitor (C_{FF}) in parallel with the upper feedback resistor (assuming the lower feedback resistor is 5.9kΩ). See Figure 4 for an illustration.

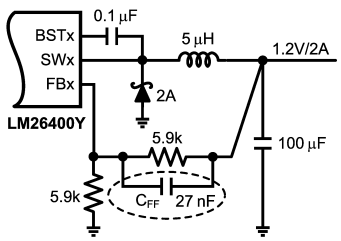

Figure 4. Adding a C_{FF} Capacitor

The responses to a load step between 0.2A and 2A with and without a C_{FF} are shown in Figure 5. The higher loop bandwidth as a result of C_{FF} reduces the total output excursion by about 80mV.

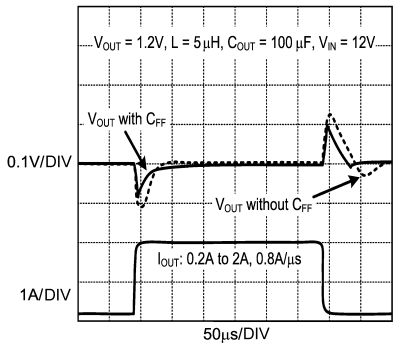

Figure 5. C_{FF} Improves Load Step Response

Use the following equation to calculate the new loop bandwidth:

$$f_C = \frac{22S}{6.28 \times C_{OUT}} \tag{5}$$

Again, the assumption is the crossover is between 20kHz and 100kHz.

In an extreme case where the load goes to less than 100mA during a large load step, output voltage may exhibit extra undershoot. This usually happens when the load toggles high at the time V_{OUT} just ramps down to its regulation level from an overshoot. Figure 6 shows such a case where the load toggles between 1.7A and only 50mA.

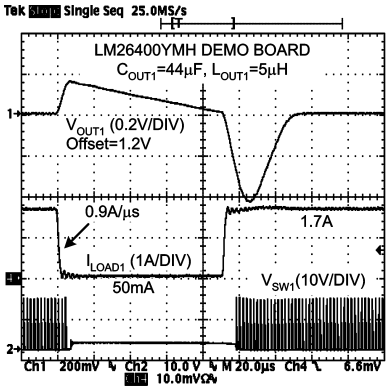

Figure 6. Extreme Load Step

In the example, the load first goes down to 50mA quickly (0.9A/µs), causing a 90µs no-switching period, and then quickly goes up to 1.7A when V_{OUT1} just hits its regulation level (1.2V), resulting in a large dip of 440mV in the output voltage.

If it is known in a system design that the load can go down to less than 100mA during a load step, and that the load can toggle high any time after it toggles low, take the following measures to minimize the potential extra undershoot. First is to add the Cff mentioned above. Second is to increase the output capacitance.

For example, to meet a ±10% V_{OUT} excursion requirement for a 100mA to 2A load step, approximately 200µF output capacitance is needed for a 1.2V output, and about 44µF is needed for a 5V output.

LOW INPUT VOLTAGE CONSIDERATIONS

When V_{IN} is between 3V and 5V, it is recommended that an external bootstrap bias voltage and a Schottky diode be used to handle load currents up to 2A. See Figure 7 for an illustration.

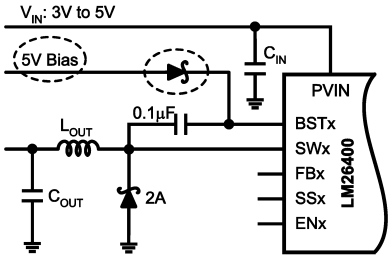

Figure 7. External Bootstrap for Low V_{IN}

The recommended voltage for the external bias is 5V. Due to the absolute maximum rating of V_{BST} - V_{SW}, the external 5V bias should not be higher than 6V.

THERMAL SHUTDOWN

Whenever the junction temperature of the LM26400Y exceeds 165°C, the MOSFET switch will be kept off until the temperature drops below 150°C, at which point the regulator will go through a hard-start to quickly raise the output voltage back to normal. Since it is a hard-start, there will be an overshoot at the output. See Thermal Shutdown in the Typical Performance Characteristics section.

 Copyright © 2007, Texas Instruments Incorporated

POWER LOSS ESTIMATION

The total power loss in the LM26400Y comprises of three parts - the power FET conduction loss, the power FET switching loss and the IC's housekeeping power loss. Use the following equation to estimate the conduction loss.

$$P_{CON} = I_{OUT}^2 \times R_{DS} \times (1 + \frac{T_J - 25^\circ C}{200^\circ C}) \times \frac{V_{OUT} + 0.5V}{V_{IN} + 0.5V} \quad (6)$$

where T_J is the junction temperature or the target junction temperature if the former is unknown. R_{DS} is the ON resistance of the internal FET at room temperature. Use 180mΩ for R_{DS} if the actual value is unknown.

Use the following equation to estimate the switching loss.

$$P_{SW} = V_{IN} \times f_{SW} \times I_{OUT} \times 10\mu W / kHz / V / A \quad (7)$$

Another loss in the IC is the housekeeping loss. It is the power dissipated by circuitry in the IC other than the power FETs. The equation is:

$$P_{HK} = V_{IN} \times 4\,mA + 15\,mW \quad (8)$$

The 15mW is gate drive loss. Do the calculation for both channels and find out the total power loss in the IC.

$$P_{LOSS} = P_{CON1} + P_{SW1} + P_{CON2} + P_{SW2} + P_{HK} \quad (9)$$

The power loss calculation can help estimate the overall power supply efficiency.

Example:

V_{IN} = 12V, V_{OUT1} = 1.2V, I_{OUT1} = 2A, V_{OUT2} = 2.5V, I_{OUT2} = 2A. Target junction temperature is 90°C.

So conduction loss in Channel 1 is:

$$P_{CON1} = (2A)^2 \times 180\,m\Omega \times (1 + \frac{90^\circ C - 25^\circ C}{200^\circ C}) \times \frac{1.2V + 0.5V}{12V + 0.5V} = 0.13W \quad (10)$$

Conduction loss in Channel 2 is:

$$P_{CON2} = (2A)^2 \times 180\,m\Omega \times (1 + \frac{90^\circ C - 25^\circ C}{200^\circ C}) \times \frac{2.5V + 0.5V}{12V + 0.5V} = 0.23W \quad (11)$$

Switching loss in either channel is:

$$P_{SW1} = P_{SW2} = 12V \times 520\,kHz \times 2A \times 10\,\mu W / kHz / V / A = 0.13W \quad (12)$$

House keeping loss is:

$$P_{HK} = 12V \times 4\,mA + 15\,mW = 0.063W \quad (13)$$

Finally the total power loss in the LM26400Y is:

$$P_{LOSS} = 0.13W + 0.13W + 0.23W + 0.13W + 0.063W = 0.68W \quad (14)$$

PROGRAMMING OUTPUT VOLTAGE

First make sure the required maximum duty cycle in steady state is less than 80% so that the regulator will not lose regulation. The datasheet lower limit for maximum duty cycle is about 90% over temperature (see Electrical Characteristics table for the accurate value). The maximum duty cycle in steady state happens at low line and full load.

The output voltage is programmed through the feedback resistors R1 and R2, as illustrated in Figure 8.

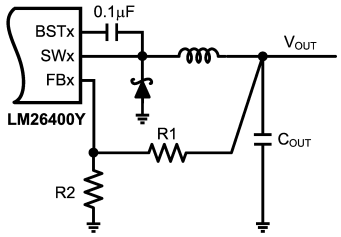

Figure 8. Programming Output Voltage

It is recommended that the lower feedback resistor R2 always be 5.9kΩ. This simplifies the selection of the C_{FF} value (For an explanation of C_{FF}, please refer to the section LOAD STEP RESPONSE). The 5.9kΩ is also a suitable R2 value in applications that need to increase the output voltage on the fly by paralleling another resistor with R2. Since the FB pin is 0.6V during normal operation, the current through the feedback resistors is normally 0.6V / 5.9kΩ = 0.1mA and the power dissipation in R2 is 0.6V x 0.6V / 5.9kΩ = 61µW - low enough for 0402 size or smaller resistors.

Use the following equation to determine the upper feedback resistor R1.

$$R1 = \left(\frac{V_{OUT}}{V_{FB}} - 1\right) \times R2 \tag{15}$$

To determine the maximum allowed resistor tolerance, use the following equation:

$$\sigma = \frac{1}{1 + 2 \times \frac{1 - \frac{V_{FB}}{V_{OUT}}}{TOL - \phi}} \tag{16}$$

where TOL is the set point accuracy of the regulator, Φ is the tolerance of V_{FB}.

Example:

V_{OUT} = 1.2V, with a set point accuracy of +/-3.5%.

$$\sigma = \frac{1}{1 + 2 \times \frac{1 - \frac{0.6V}{1.2V}}{3.5\% - 2\%}} = 1.48\% \tag{17}$$

Choose 1% resistors. R2 = 5.90kΩ.

$$R1 = \left(\frac{1.2V}{0.6V} - 1\right) \times 5.90k\Omega = 5.90k\Omega \tag{18}$$

INDUCTOR SELECTION

An inductance value that gives a peak-to-peak ripple current of 0.4A to 0.8A is recommended. Too large a ripple current can reduce the maximum achievable DC load current because the peak current of the switch is limited to a typical of 3A. Too small a ripple current can cause the regulator to oscillate due to the lack of inductor current ramp signal, especially under high input voltages. Use the following equation to determine inductance:

$$L = \frac{V_{OUT} + 0.5V}{V_{IN_MAX} + 0.5V} \times \frac{V_{IN_MAX} - V_{OUT}}{\Delta I \times f_{SW}} \tag{19}$$

where V_{IN_MAX} is the maximum input voltage of the application.

The rated current of the inductor should be higher than the maximum DC load current. Generally speaking, the lower the DC resistance of the inductor winding, the higher the overall regulator efficiency.

 Copyright © 2007, Texas Instruments Incorporated

Ferrite core inductors are recommended for less AC loss and less fringing magnetic flux. The drawback of ferrite core inductors is their quick saturation characteristic. Once the inductor gets saturated, its current can spike up very quickly if the switch is not turned off immediately. The current limit circuit has a propagation delay and so is oftentimes not fast enough to stop the saturated inductor from going above the current limit. This has the potential to damage the internal switch. So to prevent a ferrite core inductor from getting into saturation, the inductor saturation current rating should be higher than the switch current limit I_{CL}. The LM26400Y is quite robust in handling short pulses of current that is a few amps above the current limit. When a compromise has to be made, pick an inductor with a saturation current just above the lower limit of the I_{CL}. Be sure to validate the short-circuit protection over the intended temperature range.

To prevent the inductor from saturating over the entire -40°C to 125°C range, pick one with a saturation current higher than the upper limit of I_{CL} in the Electrical Characteristics table.

Inductor saturation current is usually lower when hot. So consult the inductor vendor if the saturation current rating is only specified at room temperature.

Soft saturation inductors such as the iron powder types can also be used. Such inductors do not saturate suddenly and therefore are safer when there is a severe overload or even shorted output. Their physical sizes are usually smaller than the Ferrite core inductors. The downside is their fringing flux and higher power dissipation due to relatively high AC loss, especially at high frequencies.

Example:

V_{OUT} = 1.2V; V_{IN} = 9V to 14V; I_{OUT} = 2A max; Peak-to-peak Ripple Current ΔI = 0.6A.

$$L = \frac{1.2V + 0.5V}{14V + 0.5V} \times \frac{14V - 1.2V}{0.6A \times 500kHz} = 5\mu H \tag{20}$$

Choose a 5µH or so ferrite core inductor that has a saturation current around 3A at room temperature. For example, Sumida's CDRH6D26NP-5R0NC.

If the maximum load current is significantly lower than 2A, pick an inductor with the same saturation rating as a 2A design but with a lowered DC current rating. That should result in a smaller inductor. There are not many choices, though. Another possibility is to use a soft saturation type inductor, whose size will be dominated by the DC current rating.

OUTPUT CAPACITOR SELECTION

Output capacitors in a buck regulator handles the AC current from the inductor and so have little ripple RMS current and their power dissipation is not a concern. The concern usually revolves around loop stability and capacitance retention.

The LM26400Y's internal loop compensation was designed around ceramic output capacitors. From a stability point of view, the lower the output voltage, the more capacitance is needed.

Below is a quick summary of temperature characteristics of some commonly used ceramic capacitors. So an X7R ceramic capacitor means its capacitance can vary ±15% over the temperature range of -55°C to +125°C.

Table 1. Capacitance Variation Over Temperature (Class II Dielectric Ceramic Capacitors)

Low Temperature	High Temperature	Capacitance Change Range
X: -55°C	5: +85°C	R: ±15%
Y: -30°C	6: +105°C	S: ±22%
Z: +10°C	7: +125°C	U: +22%, -56%
	8: +150°C	V: +22%, -82%

Besides the variation of capacitance over temperature, the actual capacitance of ceramic capacitors also vary, sometimes significantly, with applied DC voltage. Figure 9 illustrates such a characteristic of several ceramic capacitors of various physical sizes from Murata. Unless the DC voltage across the capacitor is going to be small relative to its rated value, going to too small a physical size will have the penalty of losing significant capacitance during circuit operation.

Copyright © 2007, Texas Instruments Incorporated

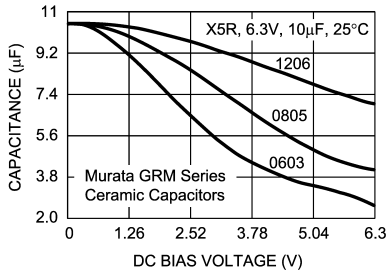

Figure 9. Capacitance vs. Applied DC Voltage

The amount of output capacitance directly contributes to the output voltage ripple magnitude. A quick way to estimate the output voltage ripple is to multiply the inductor peak-to-peak ripple current by the impedance of the output capacitors. For example, if the inductor ripple current is 0.6A peak-to-peak, and the output capacitance is 44µF, then the output voltage ripple should be close to 0.6A x $(6.28 \times 500kHz \times 44\mu F)^{-1}$ = 4.3mV. Sometimes when a large ceramic capacitor is used, the switching frequency may be higher than the capacitor's self resonance frequency. In that case, find out the true impedance at the switching frequency and then multiply that value by the ripple current to get the ripple voltage.

The amount of output capacitance also impacts the stability of the feedback loop. Refer to the LOOP STABILITY section for guidelines.

INPUT CAPACITOR SELECTION

The input capacitors provide the AC current needed by the nearby power switch so that current provided by the upstream power supply does not carry a lot of AC content, generating less EMI. To the buck regulator in question, the input capacitor also prevents the drain voltage of the FET switch from dipping when the FET is turned on, therefore providing a healthy line rail for the LM26400Y to work with. Since typically most of the AC current is provided by the local input capacitors, the power loss in those capacitors can be a concern. In the case of the LM26400Y regulator, since the two channels operate 180° out of phase, the AC stress in the input capacitors is less than if they operated in phase. The measure for the AC stress is called input ripple RMS current. It is strongly recommended that at least one 4.7µF ceramic capacitor be placed next to the PVIN pins. Bulk capacitors such as electrolytic capacitors or OSCON capacitors can be added to help stabilize the local line voltage, especially during large load transient events. As for the ceramic capacitors, use X7R , X6S or X5R types. They maintain most of their capacitance over a wide temperature range. Try to avoid sizes smaller than 0805. Otherwise significant drop in capacitance may be caused by the DC bias voltage. See OUTPUT CAPACITOR SELECTION section for more information. The DC voltage rating of the ceramic capacitor should be higher than the highest input voltage.

Capacitor temperature is a major concern in board designs. While using a 4.7µF or higher MLCC as the input capacitor is a good starting point, it is a good idea to check the temperature in the real thermal environment to make sure the capacitors are not over heated. Capacitor vendors may provide curves of ripple RMS current vs. temperature rise, based on a designated thermal impedance. In reality, the thermal impedance may be very different. So it is always a good idea to check the capacitor temperature on the board.

Since the duty cycles of the two channels may overlap, calculation of the input ripple RMS current is a little tedious. Use the following equation.

$$I_{irrm} = \sqrt{(I_1 - I_{av})^2 d1 + (I_2 - I_{av})^2 d2 + (I_1 + I_2 - I_{av})^2 d3} \tag{21}$$

I_1 is Channel 1's maximum output current. I_2 is Channel 2's maximum output current. d1 is the non-overlapping portion of Channel 1's duty cycle D_1. d2 is the non-overlapping portion of Channel 2's duty cycle D_2. d3 is the overlapping portion of the two duty cycles. I_{av} is the average input current. $I_{av} = I_1 \cdot D_1 + I_2 \cdot D_2$. To quickly determine the values of d1, d2 and d3, refer to the decision tree in Figure 10. To determine the duty cycle of each channel, use $D = V_{OUT}/V_{IN}$ for a quick result or use the following equation for a more accurate result.

$$D = \frac{V_{OUT} + 0.5V + I_{OUT} \times R_{DC}}{V_{IN} + 0.5V - I_{OUT} \times R_{DS}} \tag{22}$$

R_{DC} is the winding resistance of the inductor. R_{DS} is the ON resistance of the MOSFET switch.

 Copyright © 2007, Texas Instruments Incorporated

Example:

V_{IN} = 5V, V_{OUT1} = 3.3V, I_{OUT1} = 2A, V_{OUT2} = 1.2V, I_{OUT2} = 1.5A, R_{DS} = 170mΩ, R_{DC} = 30mΩ. (I_{OUT1} is the same as I_1 in the input ripple RMS current equation, I_{OUT2} is the same as I_2).

First, find out the duty cycles. Plug the numbers into the duty cycle equation and we get D1 = 0.75, and D2 = 0.33. Next, follow the decision tree in Figure 10 to find out the values of d1, d2 and d3. In this case, d1 = 0.5, d2 = D2 + 0.5 - D1 = 0.08, and d3 = D1 - 0.5 = 0.25. $I_{av} = I_{OUT1} \cdot D1 + I_{OUT2} \cdot D2$ = 1.995A. Plug all the numbers into the input ripple RMS current equation and the result is I_{irrm} = 0.77A.

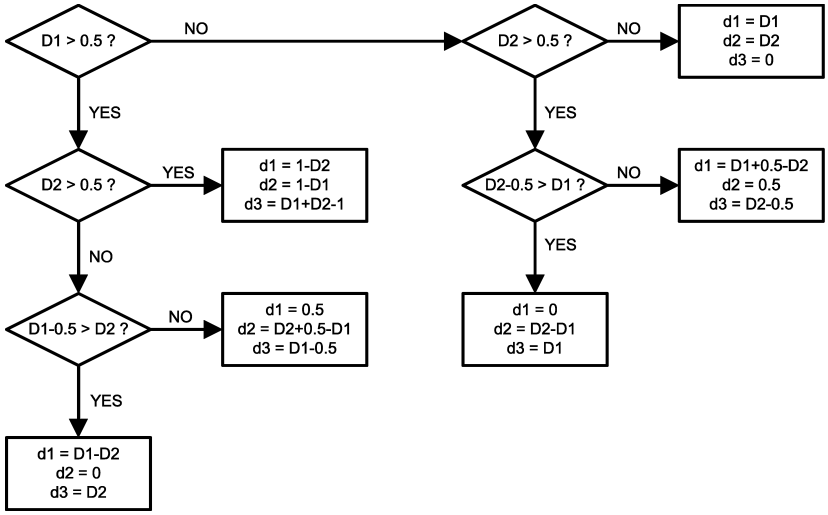

Figure 10. Determining d1, d2 and d3

CATCH DIODE SELECTION

The catch diode should be at least 2A rated. The most stressful operation for the diode is usually when the output is shorted under high line. Always pick a Schottky diode for its lower forward drop and higher efficiency. The reverse voltage rating of the diode should be at least 25% higher than the highest input voltage. The diode junction temperature is a main concern here. Always validate the diode's junction temperature in the intended thermal environment to make sure its thermally derated maximum current is not exceeded. There are a few 2A, 30V surface mount Schottky diodes available in the market. Notice that diodes have a negative temperature coefficient, so do not put two diodes in parallel to achieve a lower temperature rise. Current will be hogged by one of the diodes instead of shared by the two. Use a larger package for that purpose.

THERMAL CONSIDERATIONS

Due to the low thermal impedance from junction to the die-attach pad (or DAP, exposed metal at the bottom of the package), thermal performance heavily depends on PCB copper arrangement. The minimum requirement is to have a top-layer thermal pad that is exactly the same size as the DAP. There should be at least nine 8-mil thermal vias in the pad. The thermal vias should be connected to internal ground plane(s) (if available) and to a ground plane on the bottom layer that is as large as allowed.

In boards that have internal ground planes, extending the top-layer thermal pad outside the body of the package to form a "dogbone" shape offers little performance improvement. However, for two-layer boards, the dogbone shape on the top layer will provide significant help.

Predicting on paper with reasonable accuracy the junction temperature of the LM26400Y in a real-world application is still an art. Major factors that contribute to the junction temperature but not directly associated with the thermal performance of the LM26400Y itself include air speed, air temperature, nearby heating elements and arrangement of PCB copper connected to the DAP of the LM26400Y. The θ_{JA} value published in the datasheet is based on a standard board design in a single heating element mode and measured in a standard environment. The real application is usually completely different from those conditions. So the actual θ_{JA} will be significantly different from the datasheet number. The best approach is still to assign as much copper area as allowed to the DAP and prototype the design.

Copyright © 2007, Texas Instruments Incorporated

When prototyping the design, it is necessary to know the junction temperature of the LM26400Y to assess the thermal margin. The best way to measure the LM26400Y's junction temperature when the board is working in its usual mode is to measure the package-top temperature using an infrared thermal imaging camera. Look for the highest temperature reading across the case-top. Add two degrees to the measurement result and the number should be a pretty good estimate of the junction temperature. Due to the high temperature gradient across the case-top, the use of a thermal couple is generally not recommended. If a thermal couple has to be used, try to locate the hottest spot on the case-top first and then secure the thermal couple at exactly the same location. The thermal couple needs to be a light-gauge type (such as 40-gauge). Apply a small blob of thermal compound to the contact point and then secure the thermal couple on the case-top using thermally non-conductive glue.

If the maximum allowed junction temperature is exceeded, load current has to be lowered to bring the temperature back in specification. Or better thermal management such as more air flow needs to be provided.

As a summary, here is a list of important items to consider:

1. Use multi-layer PC boards with internal ground planes.

2. Use nine or more thermal vias to connect the top-layer thermal pad to internal ground plane(s) and ground copper on the bottom layer.

3. Generate as large a ground plane as allowable on outer layers, especially near the package.

4. Use 2 oz. copper whenever possible.

5. Try to spread out heat generating components.

6. The inductors and diodes are heat generating components and should be connected to power or ground planes using many vias.

LAYOUT GUIDELINES

There are mainly two considerations for PCB layout - thermal and electrical. For thermal details, refer to the section THERMAL CONSIDERATIONS. Electrical wise, follow the rules below as much as possible. In general, the LM26400Y is a quite robust part in terms of insensitivity to different layout patterns or even abuses.

1. Keep the input ceramic capacitor(s) as close to the PVIN pins as possible.

2. Use internal ground planes when available.

3. The SW pins are high current carrying pins so traces connected to them should be short and fat.

4. Keep feedback resistors close to the FB pins.

5. Keep the AVIN RC filter close to the AVIN pin.

6. Keep the voltage feedback traces away from the switch nodes.

7. Use six or more vias next to the ground pad of the catch diode.

8. Use at least four vias next to the ground pad of output capacitors.

9. Use at least four vias next to each pad of the input capacitors.

For low EMI emission, try not to assign large areas of copper to the noisy switch nodes as a heat sinking method. Instead, assign a lot of copper to the output nodes.

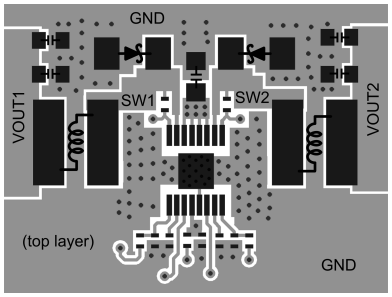

Figure 11. PCB Layout Example

Copyright © 2007, Texas Instruments Incorporated

LM26400Y Design Examples

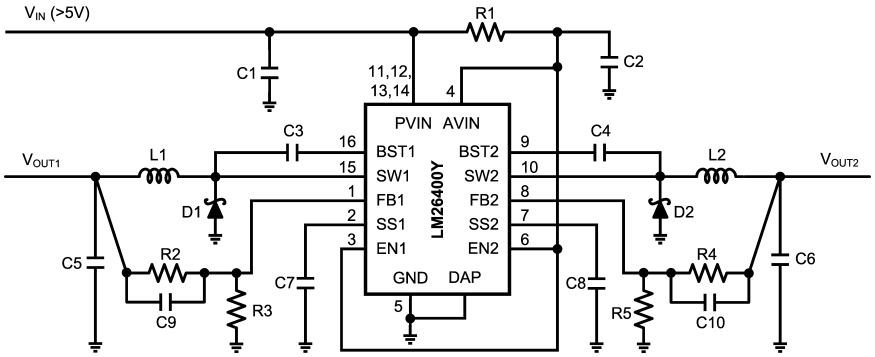

Figure 12. Example Circuit 1

Table 2. Bill of Materials (Circuit 1, V_{IN} = 12V±10%, Output1 = 1.2V/2A, Output2 = 2.5V/2A)

Part	Description	Part Values	Physical Size	Part Number	Manufacturer
C1	Capacitor, Ceramic	10µF, 16V, X5R	1210	GRM32DR61C106KA01	Murata
C2	Capacitor, Ceramic	0.22µF, 16V, X5R	0603	EMK107BJ224KA-T	Taiyo Yuden
C3	Capacitor, Ceramic	0.1µF, 6.3V, X5R	0402	C1005X5R0J104K	TDK
C4	Capacitor, Ceramic	0.1µF, 6.3V, X5R	0402	C1005X5R0J104K	TDK
C5	Capacitor, Ceramic	100µF, 6.3V, X5R	1210	GRM32ER60J107ME20L	Murata
C6	Capacitor, Ceramic	47µF, 6.3V, X5R	1210	GRM32ER60J476ME20L	Murata
C7	Capacitor, Ceramic	0.012µF, 6.3V, X5R	0402	C0402C123K9PACTU	Kemet
C8	Capacitor, Ceramic	0.012µF, 6.3V, X5R	0402	C0402C123K9PACTU	Kemet
C9	Capacitor, Ceramic	0.027µF, 6.3V, X5R	0402	C0402C273K9PACTU	Kemet
C10	Capacitor, Ceramic	0.027µF, 6.3V, X5R	0402	C0402C273K9PACTU	Kemet
D1	Diode, Schottky	2A, 30V	SMB	MBRS230LT3G	ON Semiconductor
D2	Diode, Schottky	2A, 30V	SMB	MBRS230LT3G	ON Semiconductor
L1	Inductor	5µH, 2.2A	7x7x2.8 mm^3	CDRH6D26NP-5R0NC	Sumida
L2	Inductor	8.7µH, 2.2A	7x7x4 mm^3	CDRH6D38NP-8R7NC	Sumida
R1	Resistor	10.0Ω, 1%	0402	CRCW040210R0FK	Vishay
R2	Resistor	5.90kΩ, 1%	0402	CRCW04025K90FK	Vishay
R3	Resistor	5.90kΩ, 1%	0402	CRCW04025K90FK	Vishay
R4	Resistor	18.7kΩ, 1%	0402	CRCW040218K7FK	Vishay
R5	Resistor	5.90kΩ, 1%	0402	CRCW04025K90FK	Vishay
U1	Regulator	Dual 2A Buck	ETSSOP-16	LM26400YMH	National Semiconductor

LM26400Y Design Examples

Table 3. Bill of Materials (Circuit 1, V_{IN} = 7V to 20V, Output1 = 3.3V/2A, Output2 = 5V/2A)

Part	Description	Part Values	Physical Size	Part Number	Manufacturer
C1	Capacitor, Ceramic	10µF, 25V, X5R	1812	GRM43DR61E106KA12	Murata
C2	Capacitor, Ceramic	0.22µF, 25V, X5R	0603	TMK107BJ224KA-T	Taiyo Yuden
C3	Capacitor, Ceramic	0.1µF, 6.3V, X5R	0402	C1005X5R0J104K	TDK
C4	Capacitor, Ceramic	0.1µF, 6.3V, X5R	0402	C1005X5R0J104K	TDK
C5	Capacitor, Ceramic	47µF, 6.3V, X5R	1210	GRM32ER60J476ME20	Murata
C6	Capacitor, Ceramic	33µF, 6.3V, X5R	1210	GRM32DR60J336ME19	Murata

Copyright © 2007, Texas Instruments Incorporated

Table 3. Bill of Materials (Circuit 1, V_{IN} = 7V to 20V, Output1 = 3.3V/2A, Output2 = 5V/2A) (continued)

Part	Description	Part Values	Physical Size	Part Number	Manufacturer
C7	Capacitor, Ceramic	0.012µF, 6.3V, X5R	0402	C0402C123K9PACTU	Kemet
C8	Capacitor, Ceramic	0.012µF, 6.3V, X5R	0402	C0402C123K9PACTU	Kemet
C9	Capacitor, Ceramic	0.027µF, 6.3V, X5R	0402	C0402C273K9PACTU	Kemet
C10	Capacitor, Ceramic	0.027µF, 6.3V, X5R	0402	C0402C273K9PACTU	Kemet
D1	Diode, Schottky	2A, 30V	SMB	MBRS230LT3G	ON Semiconductor
D2	Diode, Schottky	2A, 30V	SMB	MBRS230LT3G	ON Semiconductor
L1	Inductor	10µH, 3A	8.3x8.3x4 mm^3	CDRH8D38NP-100NC	Sumida
L2	Inductor	15µH, 3A	8.3x8.3x4 mm^3	CDRH8D43/HP-150NC	Sumida
R1	Resistor	10.0Ω, 1%	0402	CRCW040210R0FK	Vishay
R2	Resistor	26.7kΩ, 1%	0402	CRCW040226K7FK	Vishay
R3	Resistor	5.90kΩ, 1%	0402	CRCW04025K90FK	Vishay
R4	Resistor	43.2kΩ, 1%	0402	CRCW040218K7FK	Vishay
R5	Resistor	5.90kΩ, 1%	0402	CRCW04025K90FK	Vishay
U1	Regulator	Dual 2A Buck	ETSSOP-16	LM26400YMH	National Semiconductor

LM26400Y Design Examples

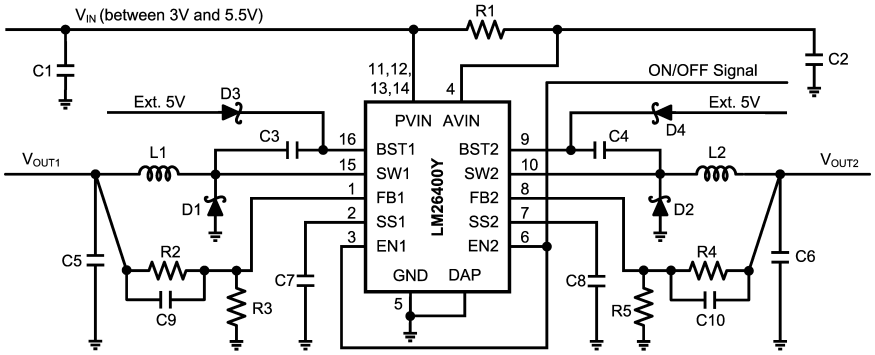

Figure 13. Example Circuit 2

Table 4. Bill of Materials (Circuit 2, V_{IN} = 3V to 5V, Output1 = 1.2V/2A, Output2 = 1.8V/2A)

Part	Description	Part Values	Physical Size	Part Number	Manufacturer
C1	Capacitor, Ceramic	10µF, 6.3V, X5R	1206	GRM319R60J106KE19	Murata
C2	Capacitor, Ceramic	0.22µF, 6.3V, X5R	0402	JMK105BJ224KV-F	Taiyo Yuden
C3	Capacitor, Ceramic	0.1µF, 6.3V, X5R	0402	C1005X5R0J104K	TDK
C4	Capacitor, Ceramic	0.1µF, 6.3V, X5R	0402	C1005X5R0J104K	TDK
C5	Capacitor, Ceramic	100µF, 6.3V, X5R	1210	GRM32ER60J107ME20L	Murata
C6	Capacitor, Ceramic	100µF, 6.3V, X5R	1210	GRM32ER60J107ME20L	Murata
C7	Capacitor, Ceramic	0.012µF, 6.3V, X5R	0402	C0402C123K9PACTU	Kemet
C8	Capacitor, Ceramic	0.012µF, 6.3V, X5R	0402	C0402C123K9PACTU	Kemet
C9	Capacitor, Ceramic	0.027µF, 6.3V, X5R	0402	C0402C273K9PACTU	Kemet
C10	Capacitor, Ceramic	0.027µF, 6.3V, X5R	0402	C0402C273K9PACTU	Kemet
D1	Diode, Schottky	2A, 30V	SMB	MBRS230LT3G	ON Semiconductor
D2	Diode, Schottky	2A, 30V	SMB	MBRS230LT3G	ON Semiconductor
L1	Inductor	5µH, 2.2A	7x7x2.8 mm^3	CDRH6D26NP-5R0NC	Sumida
L2	Inductor	5µH, 2.2A	7x7x2.8 mm^3	CDRH6D26NP-5R0NC	Sumida
R1	Resistor	10.0Ω, 1%	0402	CRCW040210R0FK	Vishay

Copyright © 2007, Texas Instruments Incorporated

Table 4. Bill of Materials (Circuit 2, V_{IN} = 3V to 5V, Output1 = 1.2V/2A, Output2 = 1.8V/2A) (continued)

Part	Description	Part Values	Physical Size	Part Number	Manufacturer
R2	Resistor	5.90kΩ, 1%	0402	CRCW04025K90FK	Vishay
R3	Resistor	5.90kΩ, 1%	0402	CRCW04025K90FK	Vishay
R4	Resistor	11.8kΩ, 1%	0402	CRCW040211K8FK	Vishay
R5	Resistor	5.90kΩ, 1%	0402	CRCW04025K90FK	Vishay
U1	Regulator	Dual 2A Buck	ETSSOP-16	LM26400YMH	National Semiconductor

Copyright © 2007, Texas Instruments Incorporated

PACKAGING INFORMATION

Orderable Device	Status (1)	Package Type	Package Drawing	Pins	Package Qty	Eco Plan (2)	Lead/Ball Finish	MSL Peak Temp (3)	Samples (Requires Login)
LM26400YMH/NOPB	ACTIVE	HTSSOP	PWP	16	92	Green (RoHS & no Sb/Br)	CU SN	Level-1-260C-UNLIM	
LM26400YMHX/NOPB	ACTIVE	HTSSOP	PWP	16	2500	Green (RoHS & no Sb/Br)	CU SN	Level-1-260C-UNLIM	
LM26400YSD/NOPB	ACTIVE	WSON	NHQ	16	1000	Green (RoHS & no Sb/Br)	CU SN	Level-1-260C-UNLIM	
LM26400YSDE/NOPB	ACTIVE	WSON	NHQ	16	250	Green (RoHS & no Sb/Br)	CU SN	Level-1-260C-UNLIM	
LM26400YSDX/NOPB	ACTIVE	WSON	NHQ	16	4500	Green (RoHS & no Sb/Br)	CU SN	Level-1-260C-UNLIM	

(1) The marketing status values are defined as follows:
ACTIVE: Product device recommended for new designs.
LIFEBUY: TI has announced that the device will be discontinued, and a lifetime-buy period is in effect.
NRND: Not recommended for new designs. Device is in production to support existing customers, but TI does not recommend using this part in a new design.
PREVIEW: Device has been announced but is not in production. Samples may or may not be available.
OBSOLETE: TI has discontinued the production of the device.

(2) Eco Plan - The planned eco-friendly classification: Pb-Free (RoHS), Pb-Free (RoHS Exempt), or Green (RoHS & no Sb/Br) - please check http://www.ti.com/productcontent for the latest availability information and additional product content details.
TBD: The Pb-Free/Green conversion plan has not been defined.
Pb-Free (RoHS): TI's terms "Lead-Free" or "Pb-Free" mean semiconductor products that are compatible with the current RoHS requirements for all 6 substances, including the requirement that lead not exceed 0.1% by weight in homogeneous materials. Where designed to be soldered at high temperatures, TI Pb-Free products are suitable for use in specified lead-free processes.
Pb-Free (RoHS Exempt): This component has a RoHS exemption for either 1) lead-based flip-chip solder bumps used between the die and package, or 2) lead-based die adhesive used between the die and leadframe. The component is otherwise considered Pb-Free (RoHS compatible) as defined above.
Green (RoHS & no Sb/Br): TI defines "Green" to mean Pb-Free (RoHS compatible), and free of Bromine (Br) and Antimony (Sb) based flame retardants (Br or Sb do not exceed 0.1% by weight in homogeneous material)

(3) MSL, Peak Temp. -- The Moisture Sensitivity Level rating according to the JEDEC industry standard classifications, and peak solder temperature.

Important Information and Disclaimer: The information provided on this page represents TI's knowledge and belief as of the date that it is provided. TI bases its knowledge and belief on information provided by third parties, and makes no representation or warranty as to the accuracy of such information. Efforts are underway to better integrate information from third parties. TI has taken and continues to take reasonable steps to provide representative and accurate information but may not have conducted destructive testing or chemical analysis on incoming materials and chemicals. TI and TI suppliers consider certain information to be proprietary, and thus CAS numbers and other limited information may not be available for release.

In no event shall TI's liability arising out of such information exceed the total purchase price of the TI part(s) at issue in this document sold by TI to Customer on an annual basis.

TAPE AND REEL INFORMATION

REEL DIMENSIONS

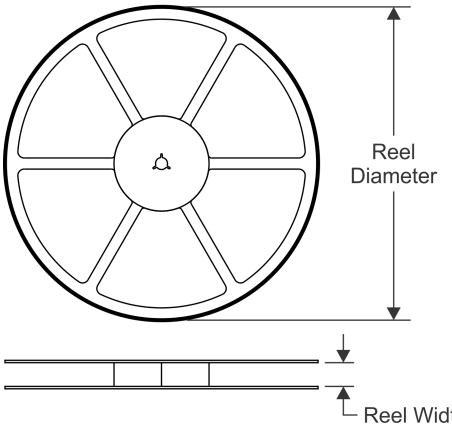

TAPE DIMENSIONS

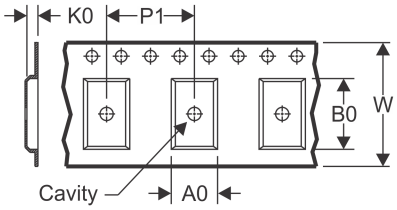

A0	Dimension designed to accommodate the component width
B0	Dimension designed to accommodate the component length
K0	Dimension designed to accommodate the component thickness
W	Overall width of the carrier tape
P1	Pitch between successive cavity centers

QUADRANT ASSIGNMENTS FOR PIN 1 ORIENTATION IN TAPE

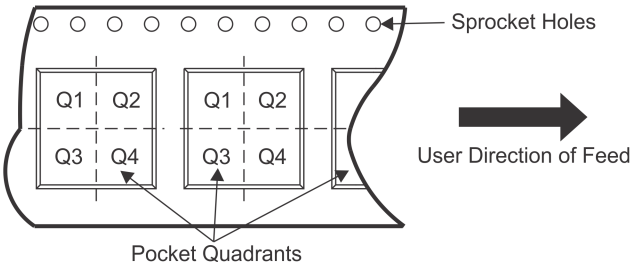

*All dimensions are nominal

Device	Package Type	Package Drawing	Pins	SPQ	Reel Diameter (mm)	Reel Width W1 (mm)	A0 (mm)	B0 (mm)	K0 (mm)	P1 (mm)	W (mm)	Pin1 Quadrant
LM26400YMHX/NOPB	HTSSOP	PWP	16	2500	330.0	12.4	6.95	8.3	1.6	8.0	12.0	Q1
LM26400YSD/NOPB	WSON	NHQ	16	1000	178.0	12.4	5.3	5.3	1.3	8.0	12.0	Q1
LM26400YSDE/NOPB	WSON	NHQ	16	250	178.0	12.4	5.3	5.3	1.3	8.0	12.0	Q1
LM26400YSDX/NOPB	WSON	NHQ	16	4500	330.0	12.4	5.3	5.3	1.3	8.0	12.0	Q1

TAPE AND REEL BOX DIMENSIONS

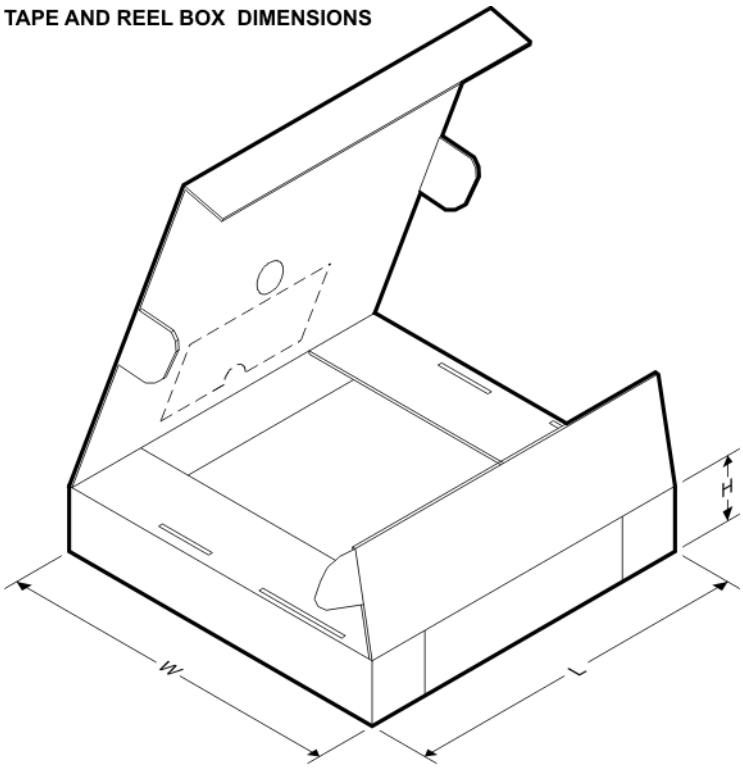

*All dimensions are nominal

Device	Package Type	Package Drawing	Pins	SPQ	Length (mm)	Width (mm)	Height (mm)
LM26400YMHX/NOPB	HTSSOP	PWP	16	2500	349.0	337.0	45.0
LM26400YSD/NOPB	WSON	NHQ	16	1000	203.0	190.0	41.0
LM26400YSDE/NOPB	WSON	NHQ	16	250	203.0	190.0	41.0
LM26400YSDX/NOPB	WSON	NHQ	16	4500	349.0	337.0	45.0

PWP (R–PDSO–G16) PowerPAD™ PLASTIC SMALL OUTLINE

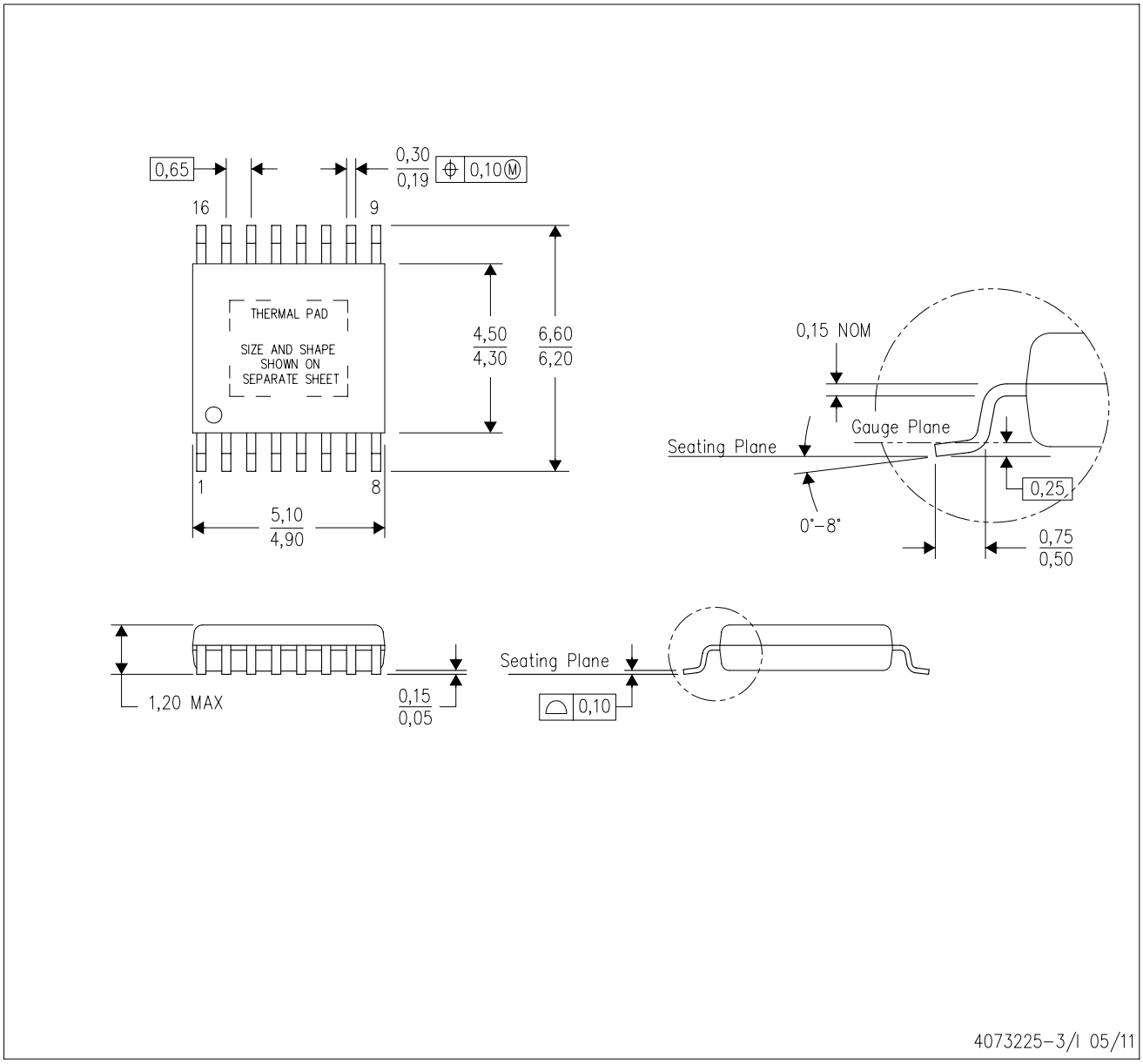

NOTES:
A. All linear dimensions are in millimeters.
B. This drawing is subject to change without notice.
C. Body dimensions do not include mold flash or protrusions. Mold flash and protrusion shall not exceed 0.15 per side.
D. This package is designed to be soldered to a thermal pad on the board. Refer to Technical Brief, PowerPad Thermally Enhanced Package, Texas Instruments Literature No. SLMA002 for information regarding recommended board layout. This document is available at www.ti.com <http://www.ti.com>.
E. See the additional figure in the Product Data Sheet for details regarding the exposed thermal pad features and dimensions.
E. Falls within JEDEC MO–153

PowerPAD is a trademark of Texas Instruments.

PWP0016A

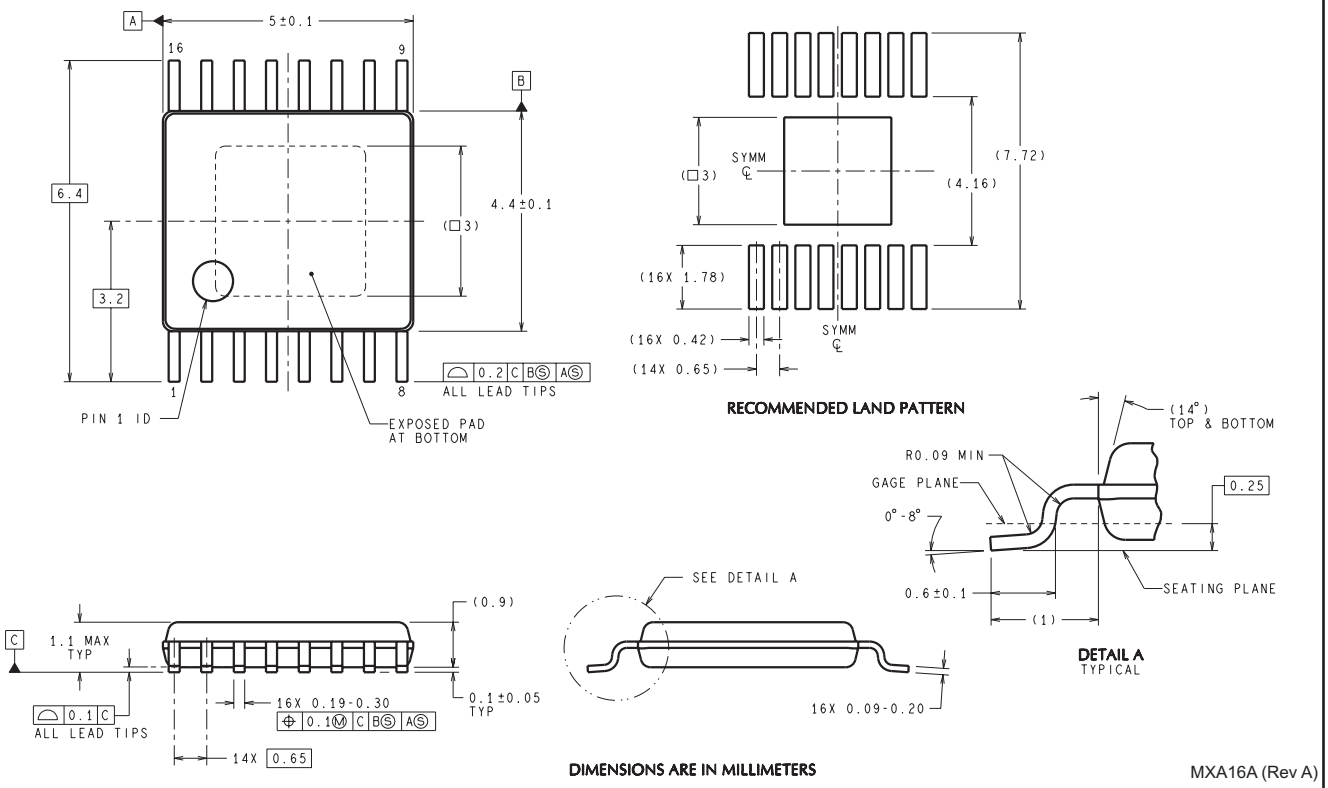
A
5±0.1
16
9
B
6.4
4.4±0.1
(□3)
3.2
1
8
0.2 C BⓈ AⓈ
ALL LEAD TIPS
PIN 1 ID
EXPOSED PAD
AT BOTTOM
SYMM
(□3)
(7.72)
(4.16)
(16X 1.78)
(16X 0.42)
(14X 0.65)
SYMM
RECOMMENDED LAND PATTERN
(14°)
TOP & BOTTOM
R0.09 MIN
GAGE PLANE
0°-8°
0.25
0.6±0.1
(1)
SEATING PLANE
DETAIL A
TYPICAL
SEE DETAIL A
16X 0.09-0.20
C
1.1 MAX
TYP
(0.9)
0.1 C
ALL LEAD TIPS
16X 0.19-0.30
0.1Ⓜ C BⓈ AⓈ
0.1±0.05
TYP
14X 0.65
DIMENSIONS ARE IN MILLIMETERS
MXA16A (Rev A)

NHQ0016A

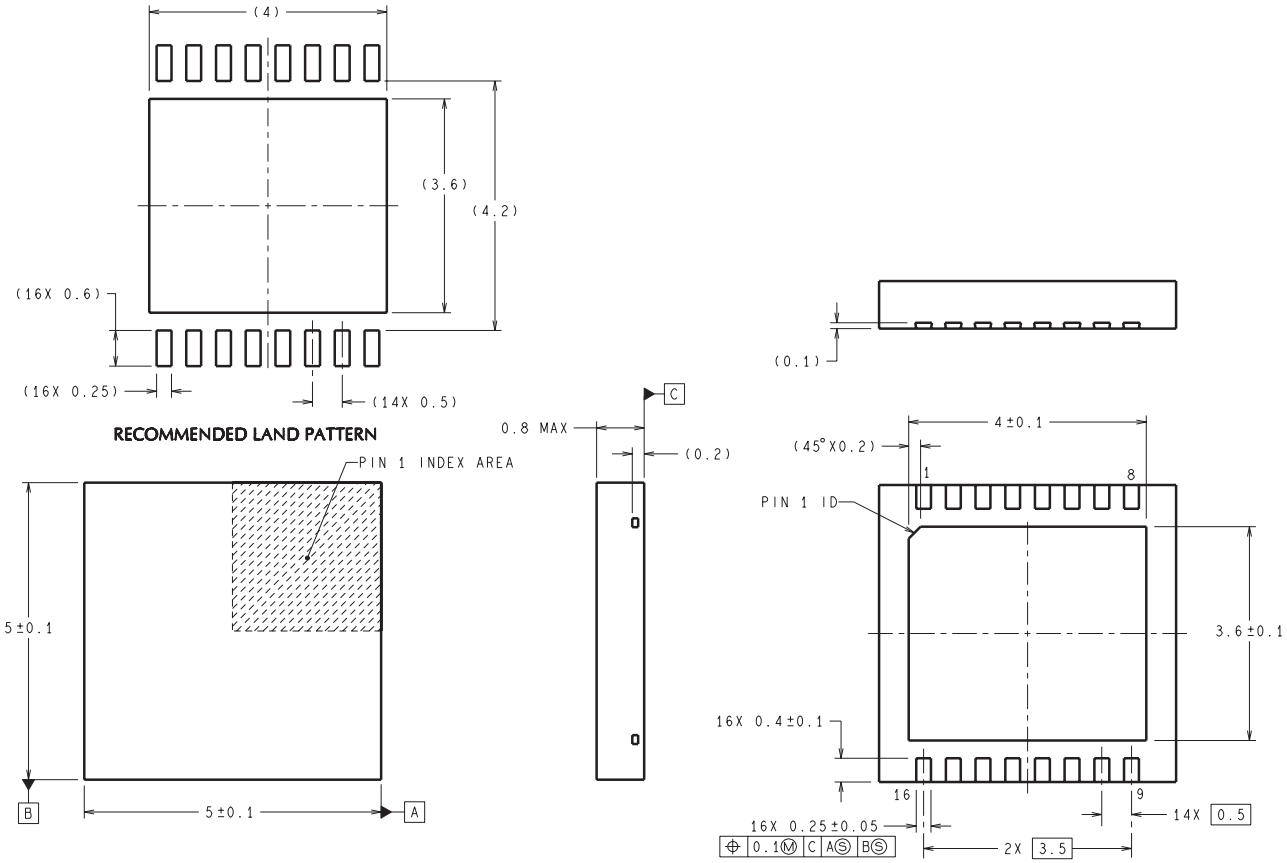

SDA16A (Rev A)

IMPORTANT NOTICE

Texas Instruments Incorporated and its subsidiaries (TI) reserve the right to make corrections, enhancements, improvements and other changes to its semiconductor products and services per JESD46, latest issue, and to discontinue any product or service per JESD48, latest issue. Buyers should obtain the latest relevant information before placing orders and should verify that such information is current and complete. All semiconductor products (also referred to herein as “components”) are sold subject to TI’s terms and conditions of sale supplied at the time of order acknowledgment.

TI warrants performance of its components to the specifications applicable at the time of sale, in accordance with the warranty in TI’s terms and conditions of sale of semiconductor products. Testing and other quality control techniques are used to the extent TI deems necessary to support this warranty. Except where mandated by applicable law, testing of all parameters of each component is not necessarily performed.

TI assumes no liability for applications assistance or the design of Buyers’ products. Buyers are responsible for their products and applications using TI components. To minimize the risks associated with Buyers’ products and applications, Buyers should provide adequate design and operating safeguards.

TI does not warrant or represent that any license, either express or implied, is granted under any patent right, copyright, mask work right, or other intellectual property right relating to any combination, machine, or process in which TI components or services are used. Information published by TI regarding third-party products or services does not constitute a license to use such products or services or a warranty or endorsement thereof. Use of such information may require a license from a third party under the patents or other intellectual property of the third party, or a license from TI under the patents or other intellectual property of TI.

Reproduction of significant portions of TI information in TI data books or data sheets is permissible only if reproduction is without alteration and is accompanied by all associated warranties, conditions, limitations, and notices. TI is not responsible or liable for such altered documentation. Information of third parties may be subject to additional restrictions.

Resale of TI components or services with statements different from or beyond the parameters stated by TI for that component or service voids all express and any implied warranties for the associated TI component or service and is an unfair and deceptive business practice. TI is not responsible or liable for any such statements.

Buyer acknowledges and agrees that it is solely responsible for compliance with all legal, regulatory and safety-related requirements concerning its products, and any use of TI components in its applications, notwithstanding any applications-related information or support that may be provided by TI. Buyer represents and agrees that it has all the necessary expertise to create and implement safeguards which anticipate dangerous consequences of failures, monitor failures and their consequences, lessen the likelihood of failures that might cause harm and take appropriate remedial actions. Buyer will fully indemnify TI and its representatives against any damages arising out of the use of any TI components in safety-critical applications.

In some cases, TI components may be promoted specifically to facilitate safety-related applications. With such components, TI’s goal is to help enable customers to design and create their own end-product solutions that meet applicable functional safety standards and requirements. Nonetheless, such components are subject to these terms.

No TI components are authorized for use in FDA Class III (or similar life-critical medical equipment) unless authorized officers of the parties have executed a special agreement specifically governing such use.

Only those TI components which TI has specifically designated as military grade or “enhanced plastic” are designed and intended for use in military/aerospace applications or environments. Buyer acknowledges and agrees that any military or aerospace use of TI components which have ***not*** been so designated is solely at the Buyer's risk, and that Buyer is solely responsible for compliance with all legal and regulatory requirements in connection with such use.

TI has specifically designated certain components as meeting ISO/TS16949 requirements, mainly for automotive use. In any case of use of non-designated products, TI will not be responsible for any failure to meet ISO/TS16949.

Products		**Applications**	
Audio	www.ti.com/audio	Automotive and Transportation	www.ti.com/automotive
Amplifiers	amplifier.ti.com	Communications and Telecom	www.ti.com/communications
Data Converters	dataconverter.ti.com	Computers and Peripherals	www.ti.com/computers
DLP® Products	www.dlp.com	Consumer Electronics	www.ti.com/consumer-apps
DSP	dsp.ti.com	Energy and Lighting	www.ti.com/energy
Clocks and Timers	www.ti.com/clocks	Industrial	www.ti.com/industrial
Interface	interface.ti.com	Medical	www.ti.com/medical
Logic	logic.ti.com	Security	www.ti.com/security
Power Mgmt	power.ti.com	Space, Avionics and Defense	www.ti.com/space-avionics-defense
Microcontrollers	microcontroller.ti.com	Video and Imaging	www.ti.com/video
RFID	www.ti-rfid.com		
OMAP Applications Processors	www.ti.com/omap	**TI E2E Community**	e2e.ti.com
Wireless Connectivity	www.ti.com/wirelessconnectivity		

Mailing Address: Texas Instruments, Post Office Box 655303, Dallas, Texas 75265
Copyright © 2012, Texas Instruments Incorporated

Mouser Electronics

Authorized Distributor

Click to View Pricing, Inventory, Delivery & Lifecycle Information:

Texas Instruments:
LM26400YEVAL/NOPB