Energy Metering IC with On-Chip Fault and Missing Neutral Detection

ADE7761

FEATURES

- **High accuracy active energy measurement IC, supports IEC 687/61036**
- **Less than 0.1% error over a dynamic range of 500 to 1**
- **Supplies active power on the frequency outputs F1 and F2**
- **High frequency output CF is intended for calibration and supplies instantaneous active power**
- **Continuous monitoring of the phase and neutral current allows fault detection in 2-wire distribution systems**
- **Current channels input level best suited for current transformer sensors**
- **Uses the larger of the two currents (phase or neutral) to bill—even during a fault condition**
- **Continuous monitoring of the voltage and current inputs allows missing neutral detection**
- **Uses one current input (phase or neutral) to bill when missing neutral is detected**
- **Two logic outputs (FAULT and REVP) can be used to indicate a potential miswiring, fault, or missing neutral condition**
- **Direct drive for electromechanical counters and 2-phase stepper motors (F1 and F2)**
- **Proprietary ADCs and DSP provide high accuracy over large variations in environmental conditions and time**
- **Reference 2.5 V ± 8% (drift 30 ppm/°C typical) with external overdrive capability**
- **Single 5 V supply, low power**

GENERAL DESCRIPTION

The ADE7761 is a high accuracy, fault tolerant, electrical energy measurement IC intended for use with 2-wire distribution systems. The part specifications surpass the accuracy requirements as quoted in the IEC61036 standard.

The only analog circuitry used on the ADE7761 is in the ADCs and reference circuit. All other signal processing (such as multiplication and filtering) is carried out in the digital domain. This approach provides superior stability and accuracy over extremes in environmental conditions and over time.

The ADE7761 incorporates a fault detection scheme similar to the ADE7751 by continuously monitoring both the phase and neutral currents. A fault is indicated when these currents differ by more than 6.25%.

(continued on Page 3)

OBSOLETE

FUNCTIONAL BLOCK DIAGRAM

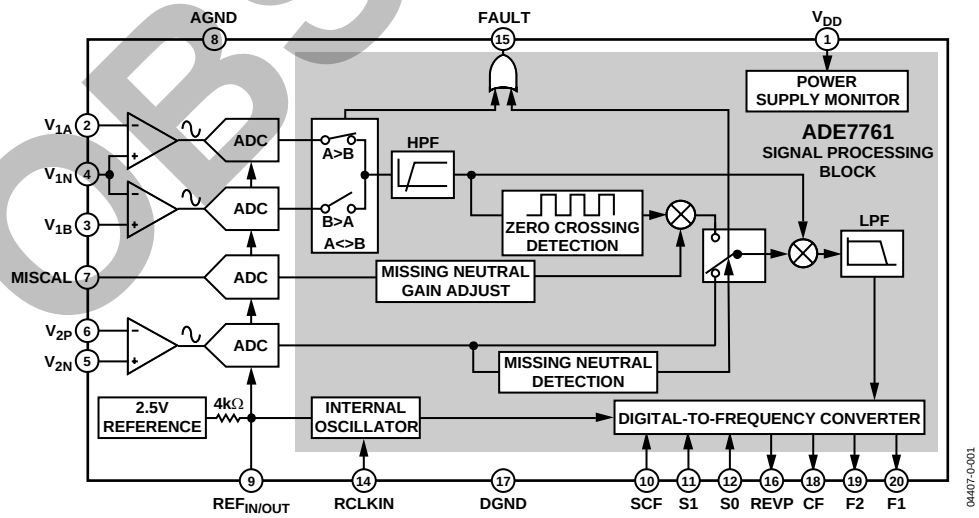

Figure 1.

Rev. A

Information furnished by Analog Devices is believed to be accurate and reliable. However, no responsibility is assumed by Analog Devices for its use, nor for any infringements of patents or other rights of third parties that may result from its use. Specifications subject to change without notice. No license is granted by implication or otherwise under any patent or patent rights of Analog Devices. Trademarks and registered trademarks are the property of their respective owners.

One Technology Way, P.O. Box 9106, Norwood, MA 02062-9106, U.S.A.
Tel: 781.329.4700 **www.analog.com**
Fax: 781.326.8703
© 2004 Analog Devices, Inc. All rights reserved.

TABLE OF CONTENTS

General Description ... 3
Specifications ... 4
Timing Characteristics ... 6
Absolute Maximum Ratings ... 7
ESD Caution ... 7
Terminology ... 8
Pin Configuration and Function Descriptions ... 9
Typical Performance Characteristics ... 11
Operation ... 13
Power Supply Monitor ... 13
Analog Inputs ... 13
Internal Oscillator ... 14
Analog-to-Digital Conversion ... 14
Active Power Calculation ... 15
Digital-to-Frequency Conversion ... 18
Transfer Function ... 18
Fault Detection ... 19
Missing Neutral Mode ... 20
Applications ... 23
Interfacing to a Microcontroller for Energy Measurement ... 23
Selecting a Frequency for an Energy Meter Application ... 23
Negative Power Information ... 24
Outline Dimensions ... 25
Ordering Guide ... 25
Disclaimer ... 26

REVISION HISTORY

2/04—Changed from Rev. 0 to Rev. A.

Changes to Ordering Guide ... 25

1/04—Revision 0: Initial Version

OBSOLETE

GENERAL DESCRIPTION

(continued from Page 1)

The ADE7761 incorporates a missing neutral detection scheme by continuously monitoring the input voltage. When a missing neutral condition is detected—no voltage input—the ADE7761 continues billing based on the active current signal (see the Missing Neutral Mode section). The missing neutral condition is indicated when the FAULT pin goes high.

The ADE7761 supplies average active power information on the low frequency outputs F1 and F2. The CF logic output gives instantaneous active power information.

The ADE7761 includes a power supply monitoring circuit on the V_{DD} supply pin. Internal phase matching circuitry ensures that the voltage and current channels are matched. An internal no-load threshold ensures that the ADE7761 does not exhibit any creep when there is no load.

OBSOLETE

SPECIFICATIONS

V_{DD} = 5 V ± 5%, AGND = DGND = 0 V, on-chip reference, on-chip oscillator, T_{MIN} to T_{MAX} = −40°C to +85°C.

Table 1.

Parameter	Value	Unit	Test Conditions/Comments
ACCURACY[1]			
Measurement Error[2]	0.1	% of reading, typ	Over a dynamic range of 500 to 1
Phase Error between Channels			
(PF = 0.8 Capacitive)	±0.05	Degrees, max	Phase lead 37°
(PF = 0.5 Inductive)	±0.05	Degrees, max	Phase lag 60°
AC Power Supply Rejection[2]			
Output Frequency Variation	0.01	%, typ	$V_{1A} = V_{1B} = V_{2P}$ = ±100 mV rms
DC Power Supply Rejection[2]			
Output Frequency Variation	0.01	%, typ	$V_{1A} = V_{1B} = V_{2P}$ = ±100 mV rms
FAULT DETECTION[2, 3]			See the Fault Detection section
Fault Detection Threshold			
Inactive Input <> Active Input	6.25	%, typ	(V_{1A} or V_{1B} active)
Input Swap Threshold			
Inactive Input <> Active Input	6.25	% of larger, typ	(V_{1A} or V_{1B} active)
Accuracy Fault Mode Operation			
V_{1A} Active, V_{1B} = AGND	0.1	% of reading, typ	Over a dynamic range of 500 to 1
V_{1B} Active, V_{1A} = AGND	0.1	% of reading, typ	Over a dynamic range of 500 to 1
Fault Detection Delay	3	Seconds, typ	
Swap Delay	3	Seconds, typ	
MISSING NEUTRAL MODE[2, 4]			See the Missing Neutral Detection section
Missing Neutral Detection Threshold			
$V_{2P} - V_{2N}$	59.4	mV peak, min	
Accuracy Missing Neutral Mode			
V_{1A} Active, $V_{1B} = V_{2P}$ = AGND	0.1	% of reading, typ	Over a dynamic range of 500 to 1
V_{1B} Active, $V_{1A} = V_{2P}$ = AGND	0.1	% of reading, typ	Over a dynamic range of 500 to 1
Missing Neutral Detection Delay	3	Seconds, typ	
ANALOG INPUTS			$V_{1A} - V_{1N}$, $V_{1B} - V_{1N}$, $V_{2P} - V_{2N}$
Maximum Signal Levels	±660	mV peak, max	Differential input
	660	mV peak, max	Differential input MISCAL – V_{2N}
Input Impedance (DC)	400	kΩ, min	
Bandwidth (−3 dB)	7	kHz, typ	
ADC Offset Error[2]	10	mV, max	Uncalibrated error, see the Terminology section for details
Gain Error	±4	%, typ	External 2.5 V reference
REFERENCE INPUT			
$REF_{IN/OUT}$ Input Voltage Range	2.7	V, max	2.5 V + 8%
	2.3	V, min	2.5 V – 8%
Input Impedance	4	kΩ, min	
Input Capacitance	10	pF, max	
ON-CHIP REFERENCE			
Reference Error	±200	mV, max	
Temperature Coefficient	30	ppm/°C, typ	
Current Source	20	µA, min	
ON-CHIP OSCILLATOR			
Oscillator Frequency	450	kHz	
Oscillator Frequency Tolerance	±12	% of reading, typ	
Temperature Coefficient	30	ppm/°C, typ	

See footnotes on next page.

OBSOLETE

Parameter	Value	Unit	Test Conditions/Comments
LOGIC INPUTS[5]			
SCF, S1, and S0			
Input High Voltage, V_{INH}	2.4	V, min	V_{DD} = 5 V ± 5%
Input Low Voltage, V_{INL}	0.8	V, max	V_{DD} = 5 V ± 5%
Input Current, I_{IN}	±3	µA, max	Typical 10 nA, V_{IN} = 0 V to V_{DD}
Input Capacitance, C_{IN}	10	pF, max	
LOGIC OUTPUTS[5]			
CF, REVP, and FAULT			
Output High Voltage, V_{OH}	4	V, min	V_{DD} = 5 V ± 5%
Output Low Voltage, V_{OH}	1	V, max	V_{DD} = 5 V ± 5%
F1 and F2			
Output High Voltage, V_{OH}	4	V, min	V_{DD} = 5 V ± 5%, I_{SOURCE} = 10 mA
Output Low Voltage, V_{OH}	1	V, max	V_{DD} = 5 V ± 5%, I_{SINK} = 10 mA
POWER SUPPLY			For specified performance
V_{DD}	4.75	V, min	5 V – 5%
	5.25	V, max	5 V + 5%
V_{DD}	4	mA, max	

[1] See plots in the Typical Performance Characteristics section.
[2] See the Terminology section for explanation of specifications.
[3] See the Fault Detection section for explanation of fault detection functionality.
[4] See the Missing Neutral Detection section for explanation of missing neutral detection functionality.
[5] Sample tested during initial release and after any redesign or process change that may affect this parameter.

OBSOLETE

TIMING CHARACTERISTICS

V_{DD} = 5 V ± 5%, AGND = DGND = 0 V, on-chip reference, on-chip oscillator, T_{MIN} to T_{MAX} = −40°C to +85°C. Sample tested during initial release and after any redesign or process change that may affect this parameter. See Figure 2.

Table 2.

Parameter	Value	Unit	Test Conditions/Comments
t_1[1]	120	ms	F1 and F2 Pulse Width (Logic High).
t_2	See Table 6	s	Output Pulse Period. See the Transfer Function section.
t_3	1/2 t_2	s	Time between F1 Falling Edge and F2 Falling Edge.
t_4[1]	90	ms	CF Pulse Width (Logic High).
t_5	See Table 7	s	CF Pulse Period. See the Transfer Function section.
t_6	CLKIN/4	s	Minimum Time between F1 and F2 Pulse.

[1] The pulse widths of F1, F2, and CF are not fixed for higher output frequencies. See the Transfer Function section.

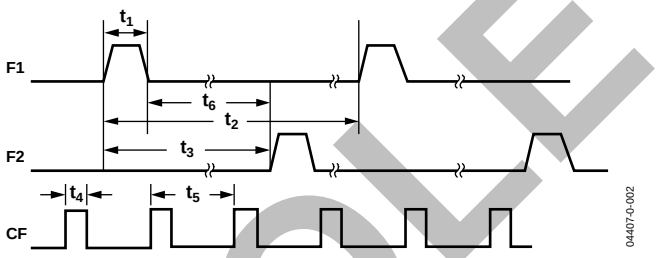

Figure 2. Timing Diagram for Frequency Outputs

OBSOLETE

ABSOLUTE MAXIMUM RATINGS

T_A = 25°C, unless otherwise noted.

Table 3.

Parameter	Rating
V_{DD} to AGND	−0.3 V to +7 V
Analog Input Voltage to AGND V_{1AP}, V_{1BP}, V_{1N}, V_{2N}, V_{2P}, MISCAL	−6 V to +6 V
Reference Input Voltage to AGND	−0.3 V to V_{DD} + 0.3 V
Digital Input Voltage to DGND	−0.3 V to V_{DD} + 0.3 V
Digital Output Voltage to DGND	−0.3 V to V_{DD} + 0.3 V
Operating Temperature Range	
Industrial	−40°C to +85°C
Storage Temperature Range	−65°C to +150°C
Junction Temperature	150°C
20-Lead SSOP, Power Dissipation	450 mW
θ_{JA} Thermal Impedance	112°C/W
Lead Temperature, Soldering	
Vapor Phase (60 s)	215°C
Infrared (15 s)	220°C

Stresses above those listed under Absolute Maximum Ratings may cause permanent damage to the device. This is a stress rating only; functional operation of the device at these or any other conditions above those listed in the operational sections of this specification is not implied. Exposure to absolute maximum rating conditions for extended periods may affect device reliability.

OBSOLETE

ESD CAUTION

ESD (electrostatic discharge) sensitive device. Electrostatic charges as high as 4000 V readily accumulate on the human body and test equipment and can discharge without detection. Although this product features proprietary ESD protection circuitry, permanent damage may occur on devices subjected to high energy electrostatic discharges. Therefore, proper ESD precautions are recommended to avoid performance degradation or loss of functionality.

TERMINOLOGY

Measurement Error

The error associated with the energy measurement made by the ADE7761 is defined by the following formula:

$$Percentage\ Error = \left(\frac{Energy\ registered\ by\ ADE7761 - True\ Energy}{True\ Energy} \times 100\% \right)$$

Phase Error between Channels

The high-pass filter (HPF) in the current channel has a phase lead response. To offset this phase response and equalize the phase response between channels, a phase correction network is also placed in the current channel. The phase correction network ensures a phase match between the current channels and voltage channels to within ±0.1° over a range of 45 Hz to 65 Hz and ±0.2° over a range 40 Hz to 1 kHz.

Power Supply Rejection

This quantifies the ADE7761 measurement error as a percentage of reading when the power supplies are varied. For the ac PSR measurement, a reading at nominal supplies (5 V) is taken. A second reading is obtained with the same input signal levels when an ac (175 mV rms/100 Hz) signal is introduced onto the supplies. Any error introduced by this ac signal is expressed as a percentage of reading (see the Measurement Error definition above).

For the dc PSR measurement, a reading at nominal supplies (5 V) is taken. A second reading is obtained with the same input signal levels when the power supplies are varied ±5%. Any error introduced is again expressed as a percentage of reading.

ADC Offset Error

This refers to the dc offset associated with the analog inputs to the ADCs. It means that with the analog inputs connected to AGND, the ADCs still see a dc analog input signal. The magnitude of the offset depends on the input range selection (see the Typical Performance Characteristics section). However, when HPFs are switched on, the offset is removed from the current channels and the power calculation is not affected by this offset.

Gain Error

The gain error in the ADE7761 ADCs is defined as the difference between the measured output frequency (minus the offset) and the ideal output frequency. The difference is expressed as a percentage of the ideal frequency, which is obtained from the transfer function (see the Transfer Function section).

OBSOLETE

PIN CONFIGURATION AND FUNCTION DESCRIPTIONS

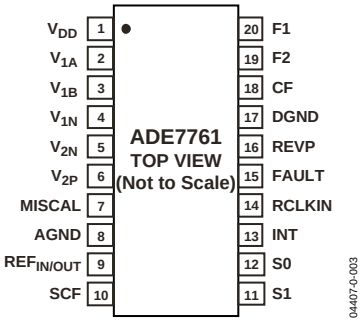

Figure 3. Pin Configuration (SSOP)

Table 4. Pin Function Descriptions

Pin No.	Mnemonic	Description
1	V_{DD}	Power Supply. This pin provides the supply voltage for the digital circuitry in the ADE7761. The supply voltage should be maintained at 5 V ± 5% for specified operation. This pin should be decoupled with a 10 µF capacitor in parallel with a ceramic 100 nF capacitor.
2, 3	V_{1A}, V_{1B}	Analog Inputs for Channel 1 (Current Channel). These inputs are fully differential voltage inputs with maximum differential input signal levels of ±660 mV with respect to V_{1N} for specified operation. The maximum signal level at these pins is ±1 V with respect to AGND. Both inputs have internal ESD protection circuitry, and an overvoltage of ±6 V can also be sustained on these inputs without risk of permanent damage.
4	V_{1N}	Negative Input Pin for Differential Voltage Inputs V_{1A} and V_{1B}. The maximum signal level at this pin is ±1 V with respect to AGND. The input has internal ESD protection circuitry, and an overvoltage of ±6 V can also be sustained on these inputs without risk of permanent damage. The input should be directly connected to the burden resistor and held at a fixed potential,that is, AGND. See the Analog Inputs section.
5	V_{2N}	Negative Input Pin for Differential Voltage Inputs V_{2P} and MISCAL. The maximum signal level at this pin is ±1 V with respect to AGND. The input has internal ESD protection circuitry, and an overvoltage of ±6 V can also be sustained on these inputs without risk of permanent damage. The input should be held at a fixed potential, that is, AGND. See the Analog Inputs section.
6	V_{2P}	Analog Inputs for Channel 2 (Voltage Channel). This input is fully differential voltage input with maximum differential input signal levels of ±660 mV with respect to V_{2N} for specified operation. The maximum signal level at these pins is ±1 V with respect to AGND. This input has internal ESD protection circuitry, and an overvoltage of ±6 V can also be sustained on these inputs without risk of permanent damage.
7	MISCAL	Analog Input for Missing Neutral Calibration. This pin can be used to calibrate the CF-F1-F2 frequencies in the missing neutral condition. This input is fully differential voltage input with maximum differential input signal levels of +660 mV with respect to V_{2N} for specified operation. The maximum signal level at this pin is ±1 V with respect to AGND. This input has internal ESD protection circuitry, and an overvoltage of ±6 V can also be sustained on these inputs without risk of permanent damage.
8	AGND	This pin provides the ground reference for the analog circuitry in the ADE7761, that is, ADCs and reference. This pin should be tied to the analog ground plane of the PCB. The analog ground plane is the ground reference for all analog circuitry such as antialiasing filters, and current and voltage transducers. For good noise suppression, the analog ground plane should be connected only to the digital ground plane at the DGND pin.
9	$REF_{IN/OUT}$	This pin provides access to the on-chip voltage reference. The on-chip reference has a nominal value of 2.5 V ± 8% and a typical temperature coefficient of 30 ppm/°C. An external reference source can also be connected at this pin. In either case, this pin should be decoupled to AGND with a 1 µF ceramic capacitor and 100 nF ceramic capacitor.
10	SCF	Select Calibration Frequency. This logic input is used to select the frequency on the calibration output CF. Table 6 shows how the calibration frequencies are selected.
11, 12	S1, S0	These logic inputs are used to select one of four possible frequencies for the digital-to-frequency conversion. This offers the designer greater flexibility when designing the energy meter. See the Selecting a Frequency for an Energy Meter Application section.

OBSOLETE

Pin No.	Mnemonic	Description
13	INT	This pin is internally used and should be connected to DGND.
14	RCLKIN	To enable the internal oscillator as a clock source on the chip, a precise low temperature drift resistor at nominal value of 6.2 kΩ must be connected from this pin to DGND.
15	FAULT	This logic output goes active high when a fault or missing neutral condition occurs. A fault is defined as a condition under which the signals on V_{1A} and V_{1B} differ by more than 6.25%. A missing neutral condition is defined when the chip is powered up with no voltage at the input. The logic output is reset to zero when a fault or missing neutral condition is no longer detected. See the Fault Detection section and the Missing Neutral Mode section.
16	REVP	This logic output goes logic high when negative power is detected, that is, when the phase angle between the voltage and current signals is greater than 90°. This output is not latched and is reset when positive power is once again detected. The output goes high or low at the same time as a pulse is issued on CF.
17	DGND	This pin provides the ground reference for the digital circuitry in the ADE7761, that is, multiplier, filters, and digital-to-frequency converter. This pin should be tied to the digital ground plane of the PCB. The digital ground plane is the ground reference for all digital circuitry such as counters (mechanical and digital), MCUs, and indicator LEDs. For good noise suppression, the analog ground plane should be connected only to the digital ground plane at the DGND pin.
18	CF	Calibration Frequency Logic Output. The CF logic output, active high, gives instantaneous active power information. This output is intended to be used for operational and calibration purposes. See the Digital-to-Frequency Conversion section.
19, 20	F2, F1	Low Frequency Logic Outputs. F1 and F2 supply average active power information. The logic outputs can be used to directly drive electromechanical counters and 2-phase stepper motors.

OBSOLETE

TYPICAL PERFORMANCE CHARACTERISTICS

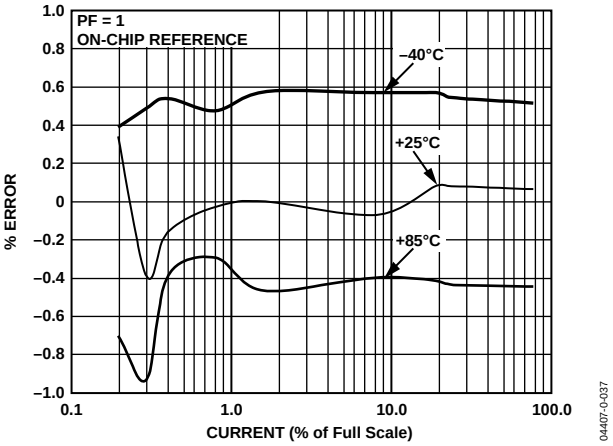

Figure 4. Active Power Error as a Percentage of Reading with Internal Reference

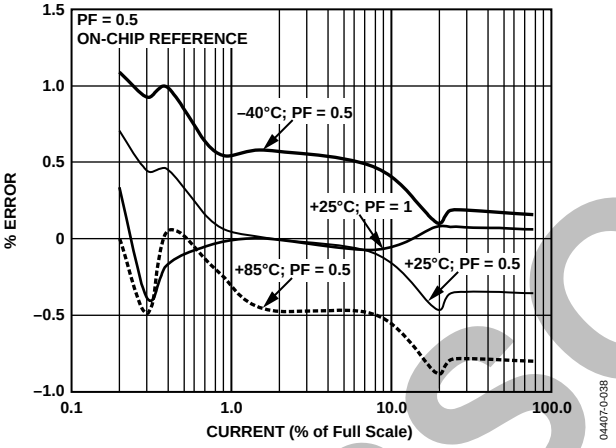

Figure 5. Active Power Error as a Percentage of Reading over Power Factor with Internal Reference

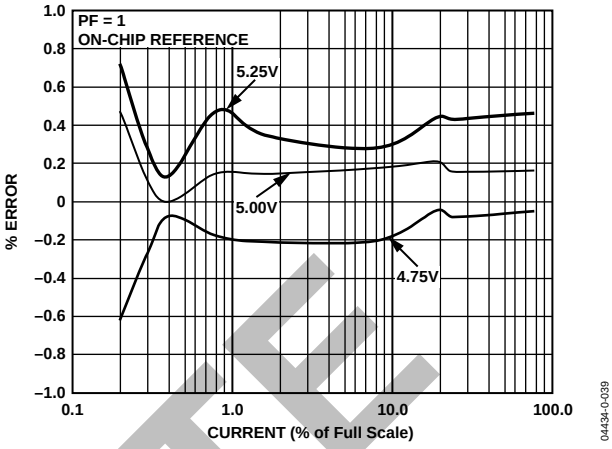

Figure 6. Active Power Error as a Percentage of Reading over Power Supply with Internal Reference

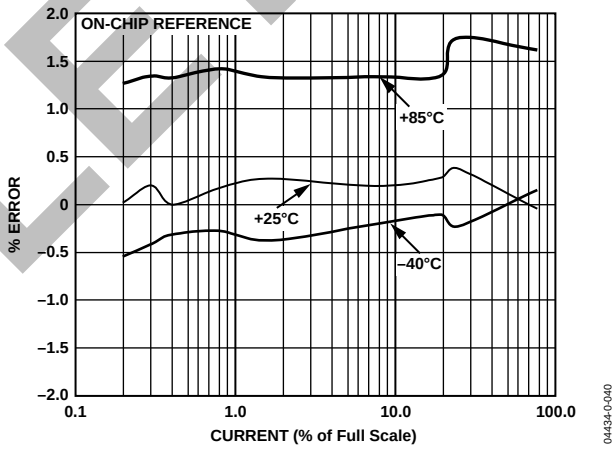

Figure 7. Ampere Hour Error as a Percentage of Reading in Missing Neutral Mode with Internal Reference

OBSOLETE

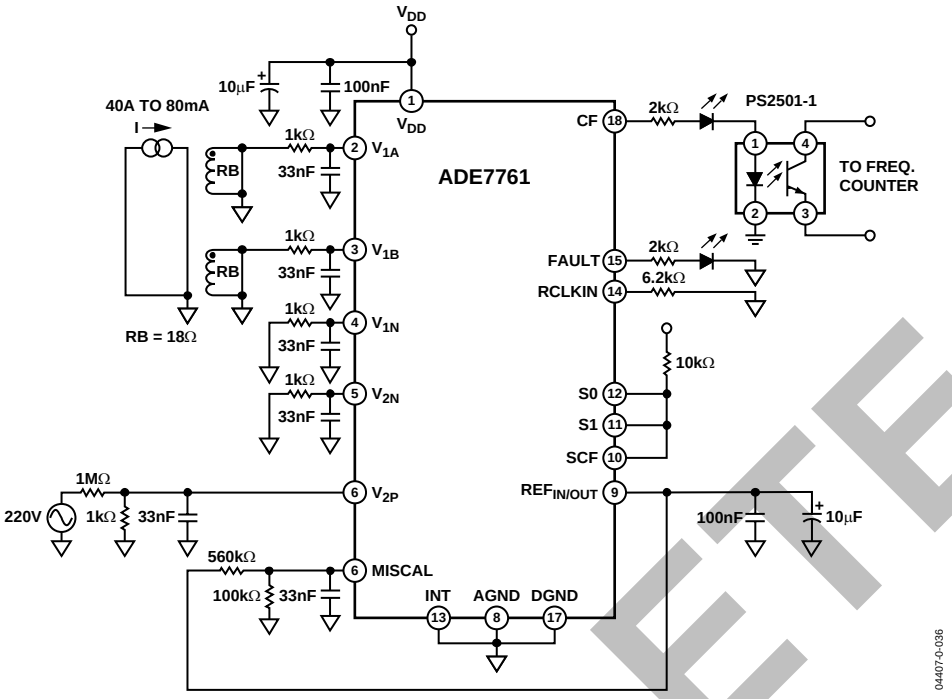

Figure 8. Test Circuit for Performances Curves

OBSOLETE

OPERATION

POWER SUPPLY MONITOR

The ADE7761 contains an on-chip power supply monitor. The power supply (V_{DD}) is continuously monitored by the ADE7761. If the supply is less than 4 V ± 5%, the ADE7761 goes into an inactive state, that is, no energy is accumulated and the CF, F1, and F2 outputs are disabled. This is useful to ensure correct device operation at power-up and during power-down. The power supply monitor has built-in hysteresis and filtering. This gives a high degree of immunity to false triggering due to noisy supplies.

The power supply and decoupling for the part should be such that the ripple at V_{DD} does not exceed 5 V ± 5% as specified for normal operation.

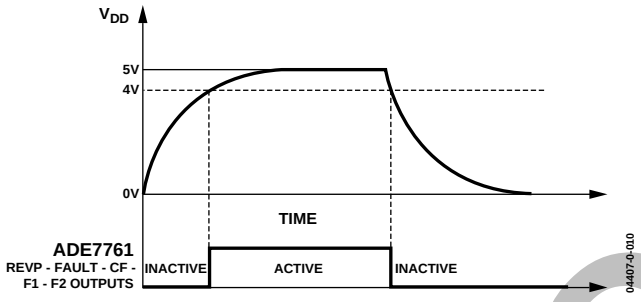

Figure 9. On-Chip Power Supply Monitoring

ANALOG INPUTS

Channel V1 (Current Channel)

The voltage outputs from the current transducers are connected to the ADE7761 here. Channel V1 has two voltage inputs, V_{1A} and V_{1B}. These inputs are fully differential with respect to V_{1N}. However, at any one time, only one is selected to perform the power calculation (see the Fault Detection section).

The maximum peak differential signal on V_{1A}–V_{1N} and V_{1B}–V_{1N} is ±660 mV.

Figure 10 shows the maximum signal levels on V_{1A}, V_{1B}, and V_{1N}. The differential voltage signal on the inputs must be referenced to a common mode (usually AGND).

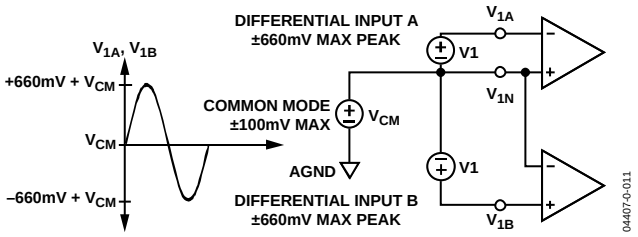

Figure 10. Maximum Signal Levels, Channel 1

Channel V2 (Voltage Channel)

The output of the line voltage transducer is connected to the ADE7761 at this analog input. Channel V2 is a single-ended voltage input. The maximum peak differential signal on Channel 2 is ±660 mV with respect to V_{2N}. Figure 11 shows the maximum signal levels that can be connected to Channel 2.

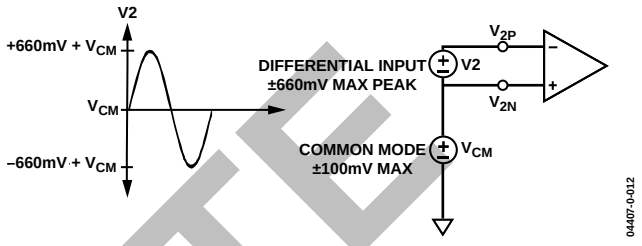

Figure 11. Maximum Signal Levels, Channel 2

The differential voltage V_{2P}–V_{2N} must be referenced to a common mode (usually AGND). The analog inputs of the ADE7761 can be driven with common-mode voltages of up to 100 mV with respect to AGND. However, the best results are achieved using a common mode equal to AGND.

MISCAL Input

The input for the power calibration in missing neutral mode is connected to the ADE7761 at this analog input. MISCAL is a single-ended voltage input. It is recommended to use a dc signal derived from the voltage reference to drive this pin. The maximum peak differential signal on MISCAL is +660 mV with respect to V_{2N}. Figure 12 shows the maximum signal levels that can be connected to the MISCAL pin.

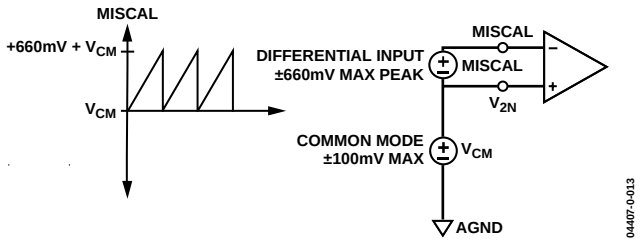

Figure 12. Maximum Signal Levels, MISCAL

The differential voltage MISCAL–V_{2N} must be referenced to a common mode (usually AGND). The analog inputs of the ADE7761 can be driven with common-mode voltages of up to 100 mV with respect to AGND. However, best results are achieved using a common mode equal to AGND.

Typical Connection Diagrams

Figure 13 shows a typical connection diagram for Channel V1. The analog inputs are being used to monitor both the phase and neutral currents. Because of the large potential difference between the phase and neutral, two current transformers (CTs) must be used to provide the isolation. Note that both CTs are referenced to analog ground (AGND); the common-mode

OBSOLETE

voltage, therefore, is 0 V. The CT turns ratio and burden resistor (RB) are selected to give a peak differential voltage of ±660 mV.

Figure 14 shows two typical connections for Channel V2. The first option uses a potential transformer (PT) to provide complete isolation from the main voltage. In the second option, the ADE7761 is biased around the neutral wire, and a resistor divider is used to provide a voltage signal that is proportional to the line voltage. Adjusting the ratio of RA and RB + VR is a convenient way of carrying out a gain calibration on the meter.

Figure 15 shows a typical connection for MISCAL input. The voltage reference input ($REF_{IN/OUT}$) is used as a dc reference to set the MISCAL voltage. Adjusting the level of MISCAL to calibrate the meter in missing neutral mode can be done by changing the ratio of RC and RD + VR_1. When the internal reference is used, the values of RC, RD, and VR_1 must be chosen to limit the current sourced by the internal reference sourcing current to below the specified 20 µA. Therefore, because V_{REF} internal = 2.5 V, RC + RD + VR_1 > 600 kΩ.

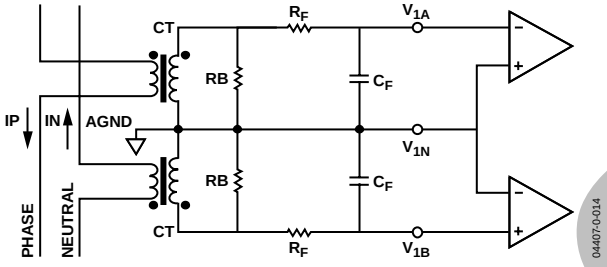

Figure 13. Typical Connection for Channel 1

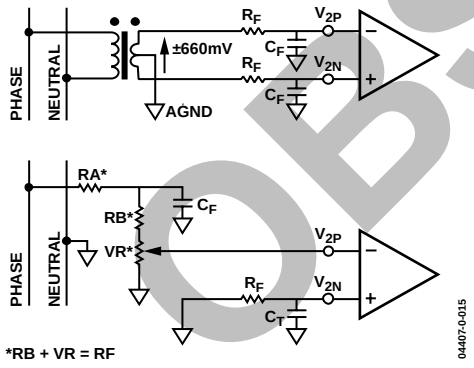

Figure 14. Typical Connection for Channel 2

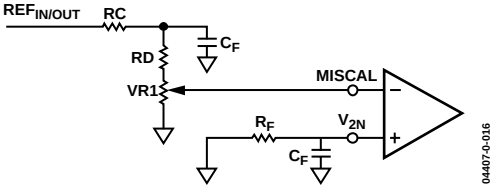

Figure 15. Typical Connection for MISCAL

INTERNAL OSCILLATOR

The nominal internal oscillator frequency is 450 kHz when used with the recommended R_{OSC} resistor value of 6.2 kΩ between RCLKIN and DGND (see Figure 16).

The internal oscillator frequency is inversely proportional to the value of this resistor. Although the internal oscillator operates when used with a R_{OSC} resistor value between 5 kΩ and 12 kΩ, it is recommended to choose a value within the range of the nominal value.

The output frequencies on CF, F1, and F2 are directly proportional to the internal oscillator frequency; therefore, the resistor R_{OSC} must have a low tolerance and low temperature drift. A low tolerance resistor limits the variation of the internal oscillator frequency. Small variation of the clock frequency and consequently of the output frequencies from meter to meter contributes to a smaller calibration range of the meter. A low temperature drift resistor directly limits the variation of the internal clock frequency over temperature. The stability of the meter to external variation is then better ensured by design.

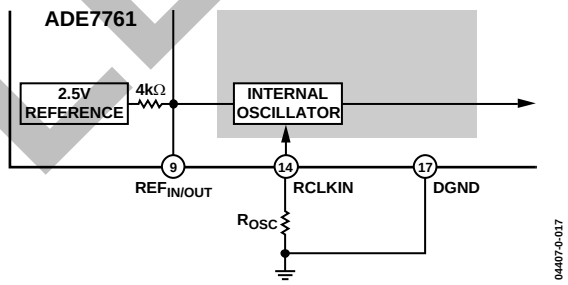

Figure 16. Internal Oscillator Connection

ANALOG-TO-DIGITAL CONVERSION

The analog-to-digital conversion in the ADE7761 is carried out using second-order Σ-Δ ADCs. Figure 17 shows a first-order (for simplicity) Σ-Δ ADC. The converter is made up of two parts: the Σ-Δ modulator and the digital low-pass filter.

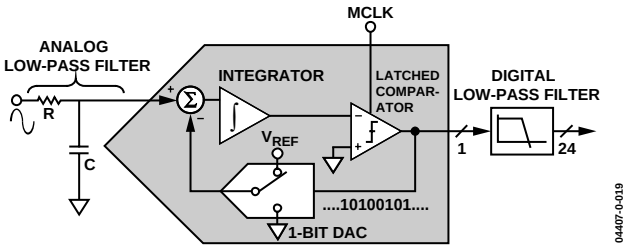

Figure 17. First-Order Σ-Δ ADC

A Σ-Δ modulator converts the input signal into a continuous serial stream of 1s and 0s at a rate determined by the sampling clock. In the ADE7761, the sampling clock is equal to CLKIN. The 1-bit DAC in the feedback loop is driven by the serial data stream. The DAC output is subtracted from the input signal. If the loop gain is high enough, the average value of the DAC

OBSOLETE

output (and, therefore, the bit stream) approaches that of the input signal level. For any given input value in a single sampling interval, the data from the 1-bit ADC is virtually meaningless. Only when a large number of samples are averaged is a meaningful result obtained. This averaging is carried out in the second part of the ADC, the digital low-pass filter. By averaging a large number of bits from the modulator, the low-pass filter can produce 24-bit data words that are proportional to the input signal level.

The Σ-Δ converter uses two techniques to achieve high resolution from what is essentially a 1-bit conversion technique. The first is oversampling, which means that the signal is sampled at a rate (frequency) that is many times higher than the bandwidth of interest. For example, the sampling rate in the ADE7761 is CLKIN (450 kHz) and the band of interest is 40 Hz to 1 kHz. Oversampling has the effect of spreading the quantization noise (noise due to sampling) over a wider bandwidth. With the noise spread more thinly over a wider bandwidth, the quantization noise in the band of interest is lowered (see Figure 18).

However, oversampling alone is not an efficient enough method to improve the signal-to-noise ratio (SNR) in the band of interest. For example, an oversampling ratio of 4 is required just to increase the SNR by only 6 dB (1 bit). To keep the oversampling ratio at a reasonable level, it is possible to shape the quantization noise so that the majority of the noise lies at the higher frequencies. This is what happens in the Σ-Δ modulator; the noise is shaped by the integrator, which has a high-pass type response for the quantization noise. The result is that most of the noise is at the higher frequencies where it can be removed by the digital low-pass filter. This noise shaping is also shown in Figure 18.

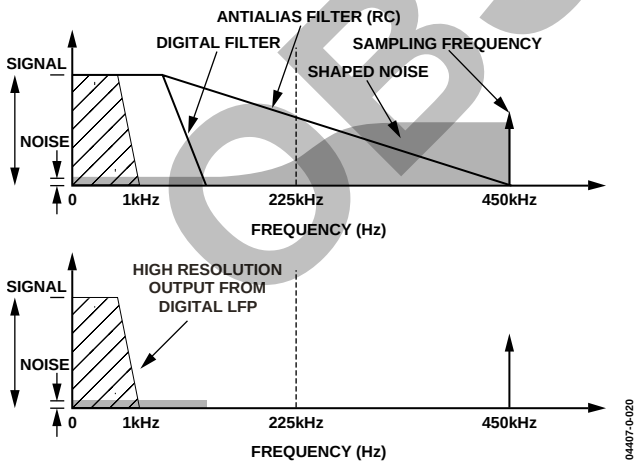

Figure 18. Noise Reduction Due to Oversampling and Noise Shaping in the Analog Modulator

Antialias Filter

Figure 18 also shows an analog low-pass filter (RC) on input to the modulator. This filter is present to prevent aliasing. Aliasing is an artifact of all sampled systems, which means that frequency components in the input signal to the ADC that are higher than half the sampling rate of the ADC appear in the sampled signal frequency below half the sampling rate. Figure 19 illustrates the effect.

In Figure 19, frequency components (arrows shown in black) above half the sampling frequency (also known as the Nyquist frequency), that is, 225 kHz, are imaged or folded back down below 225 kHz (arrows shown in gray). This happens with all ADCs no matter what the architecture. In the example shown, only frequencies near the sampling frequency (450 kHz) move into the band of interest for metering (40 Hz to 1 kHz). This fact allows the use of a very simple low-pass filter to attenuate these frequencies (near 250 kHz) and thereby prevent distortion in the band of interest. A simple RC filter (single pole) with a corner frequency of 10 kHz produces an attenuation of approximately 33 dB at 450 kHz (see Figure 19). This is sufficient to eliminate the effects of aliasing.

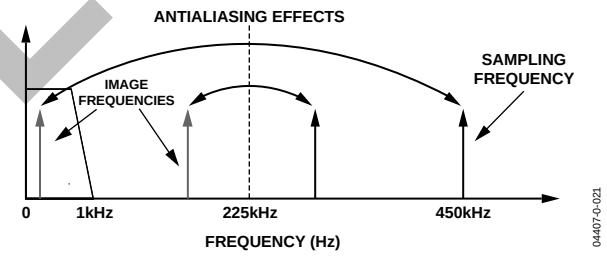

Figure 19. ADC and Signal Processing in Current Channel or Voltage Channel

ACTIVE POWER CALCULATION

The ADCs digitize the voltage signals from the current and voltage transducers. A high-pass filter in the current channel removes any dc component from the current signal. This eliminates any inaccuracies in the active power calculation due to offsets in the voltage or current signals (see the HPF and Offset Effects section).

The active power calculation is derived from the instantaneous power signal. The instantaneous power signal is generated by a direct multiplication of the current and voltage signals. To extract the active power component (dc component), the instantaneous power signal is low-pass filtered. Figure 20 illustrates the instantaneous active power signal and shows how the active power information can be extracted by low-pass filtering the instantaneous power signal. This scheme correctly calculates active power for nonsinusoidal current and voltage waveforms at all power factors. All signal processing is carried out in the digital domain for superior stability over temperature and time.

OBSOLETE

The low frequency output of the ADE7761 is generated by accumulating this active power information. This low frequency inherently means a long accumulation time between output pulses. The output frequency is, therefore, proportional to the average active power. This average active power information can in turn be accumulated (for example, by a counter) to generate active energy information. Because of its high output frequency and therefore shorter integration time, the CF output is proportional to the instantaneous active power. This is useful for system calibration purposes that would take place under steady load conditions.

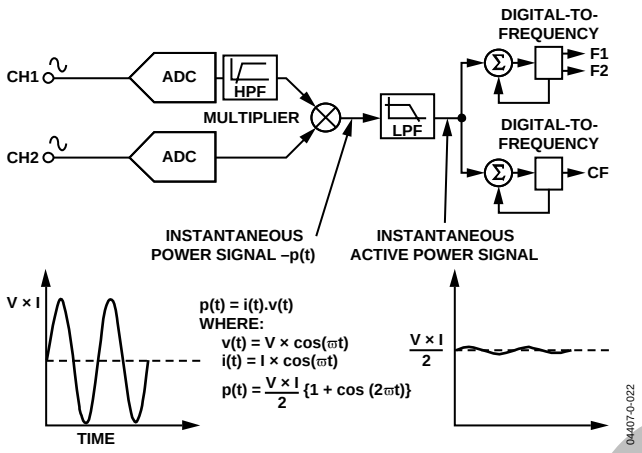

Figure 20. Signal Processing Block Diagram

Power Factor Considerations

The method used to extract the active power information from the instantaneous power signal (by low-pass filtering) is still valid even when the voltage and current signals are not in phase. Figure 21 displays the unity power factor condition and a displacement power factor (DPF = 0.5), that is, current signal lagging the voltage by 60°. If one assumes that the voltage and current waveforms are sinusoidal, the active power component of the instantaneous power signal (dc term) is given by

$$(V \times I/2) \times \cos(60°)$$

This is the correct active power calculation.

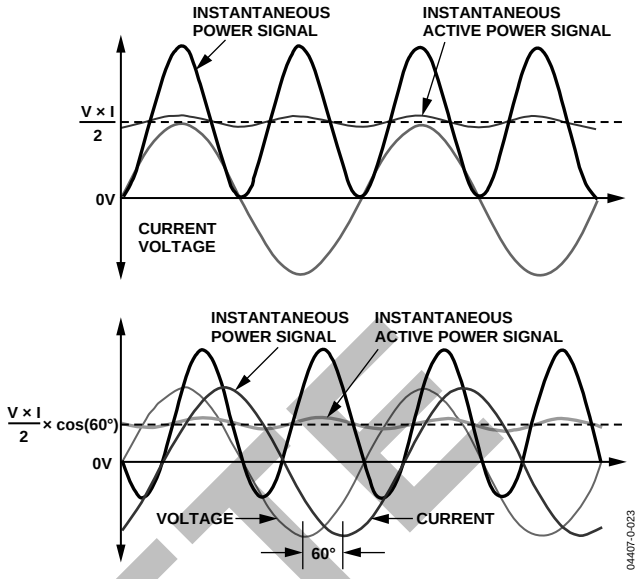

Figure 21. Active Power Calculation over PF

Nonsinusoidal Voltage and Current

The active power calculation method also holds true for nonsinusoidal current and voltage waveforms. All voltage and current waveforms in practical applications have some harmonic content. Using the Fourier transform, instantaneous voltage and current waveforms can be expressed in terms of their harmonic content:

$$v(t) = V_O + \sqrt{2} \times \sum_{h \neq 0}^{\infty} V_h \times \sin(h\omega t + \alpha_h) \qquad (1)$$

where:

$v(t)$ is the instantaneous voltage.
V_O is the average value.
V_h is the rms value of voltage harmonic h.
α_h is the phase angle of the voltage harmonic.

$$i(t) = I_O + \sqrt{2} \times \sum_{h \neq 0}^{\infty} I_h \times \sin(h\omega t + \beta_h) \qquad (2)$$

where:

$i(t)$ is the instantaneous current.
I_O is the dc component.
I_h is the rms value of current harmonic h.
β_h is the phase angle of the current harmonic.

OBSOLETE

Using Equations 1 and 2, the active power P can be expressed in terms of its fundamental active power (P_1) and harmonic active power (P_H):

$$P = P_1 + P_H$$

where:

$$P_1 = V_1 \times I_1 \cos(\Phi_1)$$
$$\Phi_1 = \alpha_1 - \beta_1 \quad (3)$$

and

$$P_H = \sum_{h=2}^{\infty} V_h \times I_h \times \cos(\Phi_h)$$
$$\Phi_h = \alpha_h - \beta_h \quad (4)$$

As can be seen from Equation 4, a harmonic active power component is generated for every harmonic, provided that harmonic is present in both the voltage and current waveforms. The power factor calculation has previously been shown to be accurate in the case of a pure sinusoid; the harmonic active power must, therefore, also correctly account for power factor, because it is made up of a series of pure sinusoids.

Note that the input bandwidth of the analog inputs is 7 kHz with the internal oscillator frequency of 450 kHz.

HPF and Offset Effects

Equation 5 shows the effect of offsets on the active power calculation. Figure 22 shows the effect of offsets on the active power calculation in the frequency domain.

$$V(t) \times I(t) =$$
$$(V_0 + V_1 \times \cos(\omega t)) \times (I_0 + I_1 \times \cos(\omega t)) = \quad (5)$$
$$V_0 \times I_1 + \frac{V_1 \times I_1}{2} + V_0 \times I_1 \times \cos(\omega t) + V_1 \times I_0 \times \cos(\omega t)$$

As can be seen from Equation 5 and Figure 22, an offset on Channel 1 and Channel 2 contributes a dc component after multiplication. Because this dc component is extracted by the LPF and used to generate the active power information, the offsets contribute a constant error to the active power calculation. This problem is easily avoided in the ADE7761 with the HPF in Channel 1. By removing the offset from at least one channel, no error component can be generated at dc by the multiplication. Error terms at cos(ωt) are removed by the LPF and the digital-to-frequency conversion (see the Digital-to-Frequency Conversion section).

The HPF in Channel 1 has an associated phase response that is compensated for on-chip. Figure 23 and Figure 24 show the phase error between channels with the compensation network activated. The ADE7761 is phase compensated up to 1 kHz as shown, which ensures correct active harmonic power calculation even at low power factors.

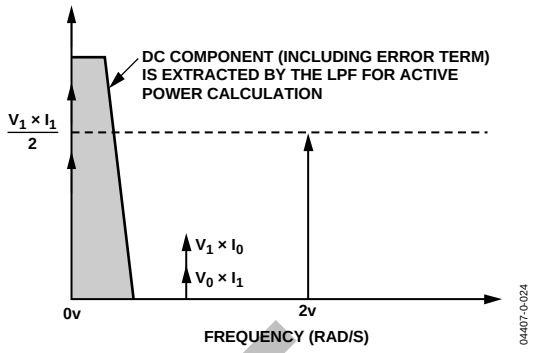

Figure 22. Effect of Channel Offsets on the Active Power Calculation

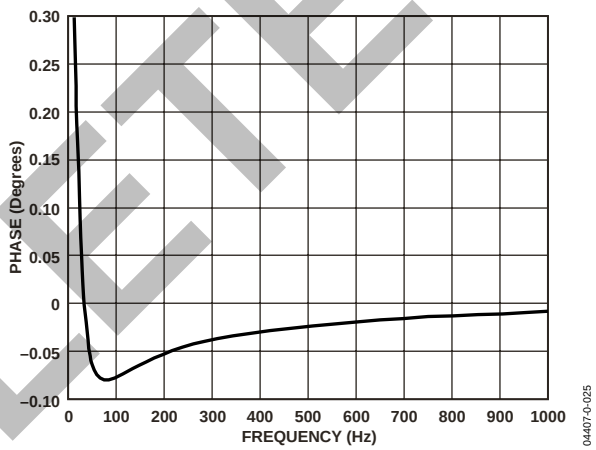

Figure 23. Phase Error between Channels (0 Hz to 1 kHz)

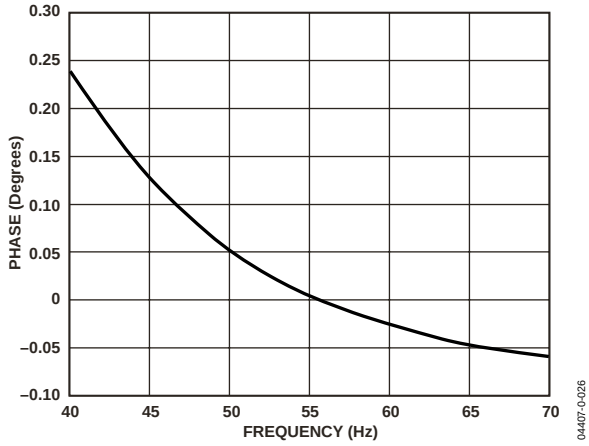

Figure 24. Phase Error between Channels (40 Hz to 70 Hz)

OBSOLETE

DIGITAL-TO-FREQUENCY CONVERSION

As previously described, the digital output of the low-pass filter after multiplication contains the active power information. However, because this LPF is not an ideal "brick wall" filter implementation, the output signal also contains attenuated components at the line frequency and its harmonics, that is, cos(hωt), where h = 1, 2, 3, …, and so on. The magnitude response of the filter is given by

$$|H(f)| = \frac{1}{\sqrt{1 = (f / 4.5\,\text{Hz})^2}} \quad (6)$$

For a line frequency of 50 Hz, this gives an attenuation of the 2ω (100 Hz) component of approximately –26.9 dB. The dominating harmonic is at twice the line frequency, cos(2ωt), due to the instantaneous power signal.

Figure 25 shows the instantaneous active power signal output of the LPF, which still contains a significant amount of instantaneous power information, cos(2ωt). This signal is then passed to the digital-to-frequency converter, where it is integrated (accumulated) over time to produce an output frequency. This accumulation of the signal suppresses or averages out any non-dc components in the instantaneous active power signal. The average value of a sinusoidal signal is zero. Therefore, the frequency generated by the ADE7761 is proportional to the average active power.

Figure 25 also shows the digital-to-frequency conversion for steady load conditions: constant voltage and current. As can be seen in Figure 25, the frequency output CF varies over time, even under steady load conditions. This frequency variation is primarily due to the cos(2ωt) component in the instantaneous active power signal.

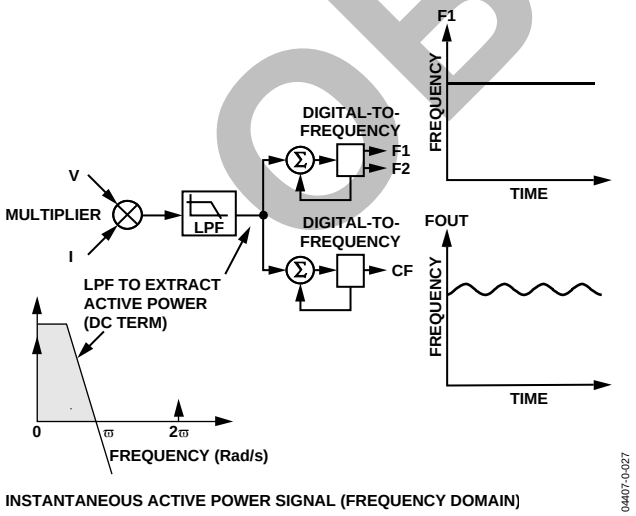

Figure 25. Active Power to Frequency Conversion

The output frequency on CF can be up to 2048 times higher than the frequency on F1 and F2. This higher output frequency is generated by accumulating the instantaneous active power signal over a much shorter time while converting it to a frequency. This shorter accumulation period means less averaging of the cos(2ωt) component. As a consequence, some of this instantaneous power signal passes through the digital-to-frequency conversion. This is not a problem in the application.

Where CF is used for calibration purposes, the frequency should be averaged by the frequency counter, which removes any ripple. If CF is being used to measure energy, such as in a microprocessor-based application, the CF output should also be averaged to calculate power. Because the outputs F1 and F2 operate at a much lower frequency, a lot more averaging of the instantaneous active power signal is carried out. The result is a greatly attenuated sinusoidal content and a virtually ripple-free frequency output.

TRANSFER FUNCTION

Frequency Outputs F1 and F2

The ADE7761 calculates the product of two voltage signals (on Channel 1 and Channel 2) and then low-pass filters this product to extract active power information. This active power information is then converted to a frequency. The frequency information is output on F1 and F2 in the form of active high pulses. The pulse rate at these outputs is relatively low, for example, 0.34 Hz maximum for ac signals with S0 = S1 = 0 (see Table 7). This means that the frequency at these outputs is generated from active power information accumulated over a relatively long period of time. The result is an output frequency that is proportional to the average active power. The averaging of the active power signal is implicit to the digital-to-frequency conversion. The output frequency or pulse rate is related to the input voltage signals by the following equation:

$$F_1 - F_2\ Frequency = \frac{5.70 \times V1_{rms} \times V2_{rms} \times F_{1-4}}{V_{REF}^{\ 2}} \quad (7)$$

where:

$F_1 - F_2$ *Frequency* is the output frequency on F1 and F2 (Hz).
$V1_{rms}$ is the differential rms voltage signal on Channel 1 (V).
$V2_{rms}$ is the differential rms voltage signal on Channel 2 (V).
V_{REF} is the reference voltage (2.5 V ± 8%) (V).
F_{1-4} is one of four possible frequencies selected by using the logic inputs S0 and S1 (see Table 5).

OBSOLETE

Table 5. F_{1-4} Frequency Selection

S1	S0	F_{1-4} (Hz)[1]	OSC/CLKIN[2]
0	0	1.72	$OSC/2^{18}$
0	1	3.44	$OSC/2^{17}$
1	0	6.86	$OSC/2^{16}$
1	1	13.7	$OSC/2^{15}$

[1] Values are generated using the nominal frequency of 450 kHz.
[2] F_{1-4} are a binary fraction of the master clock and, therefore, vary with the internal oscillator frequency (OSC).

Frequency Output CF

The pulse output calibration frequency (CF) is intended for use during calibration. The output pulse rate on CF can be up to 2048 times the pulse rate on F1 and F2. The lower the F_{1-4} frequency selected, the higher the CF scaling. Table 6 shows how the two frequencies are related, depending on the states of the logic inputs S0, S1, and SCF. Because of its relatively high pulse rate, the frequency at this logic output is proportional to the instantaneous active power. As with F1 and F2, the frequency is derived from the output of the low-pass filter after multiplication. However, because the output frequency is high, this active power information is accumulated over a much shorter time. Therefore, less averaging is carried out in the digital-to-frequency conversion. With much less averaging of the active power signal, the CF output is much more responsive to power fluctuations (see Figure 20).

Table 6. Relationship between CF and F1, F2 Frequency Outputs

SCF	S1	S0	F_{1-4} (Hz)	CF Frequency Output
1	0	0	1.72	128 × F1, F2
0	0	0	1.72	64 × F1, F2
1	0	1	3.44	64 × F1, F2
0	0	1	3.44	32 × F1, F2
1	1	0	6.86	32 × F1, F2
0	1	0	6.86	16 × F1, F2
1	1	1	13.7	16 × F1, F2
0	1	1	13.7	2048 × F1, F2

Example

In this example, if ac voltages of ±660 mV peak are applied to V1 and V2, then the expected output frequency on CF, F1, and F2 is calculated as follows:

F_{1-4} = 1.7 Hz, SCF = S1 = S0 = 0

$V1_{rms}$ = rms of 660 mV peak ac = $0.66/\sqrt{2}$ V

$V2_{rms}$ = rms of 660 mV peak ac = $0.66/\sqrt{2}$ V

V_{REF} = 2.5 V (nominal reference value)

Note that if the on-chip reference is used, actual output frequencies may vary from device to device due to a reference tolerance of ±8%.

$$F_1 - F_2\ Frequency = \frac{5.70 \times 0.66 \times 0.66 \times 1.72\,\text{Hz}}{\sqrt{2} \times \sqrt{2} \times 2.5^2} = 0.34\,\text{Hz}$$

$$CF\ Frequency = F_1 - F_2 \times 64 = 22.0\ \text{Hz}$$

As can be seen from these two example calculations, the maximum output frequency for ac inputs is always half of that for dc input signals. Table 7 shows a complete listing of all maximum output frequencies for ac signals.

Table 7. Maximum Output Frequency on CF, F1, and F2 for AC Inputs

SCF	S1	S0	F1, F2 Maximum Frequency (Hz)	CF Maximum Frequency (Hz)	CF to F1 Ratio
1	0	0	0.34	43.52	128
0	0	0	0.34	21.76	64
1	0	1	0.68	43.52	64
0	0	1	0.68	21.76	32
1	1	0	1.36	43.52	32
0	1	0	1.36	21.76	16
1	1	1	2.72	43.52	16
0	1	1	2.72	5570	2048

FAULT DETECTION

The ADE7761 incorporates a novel fault detection scheme that warns of fault conditions and allows the ADE7761 to continue accurate billing during a fault event. The ADE7761 does this by continuously monitoring both the phase and neutral (return) currents. A fault is indicated when these currents differ by more than 6.25%. However, even during a fault, the output pulse rate on F1 and F2 is generated using the larger of the two currents. Because the ADE7761 looks for a difference between the voltage signals on V_{1A} and V_{1B}, it is important that both current transducers be closely matched.

On power-up, the output pulse rate of the ADE7761 is proportional to the product of the voltage signals on V_{1A} and Channel 2. If there is a difference of greater than 6.25% between V_{1A} and V_{1B} on power-up, the fault indicator (FAULT) becomes active after about 1 s. In addition, if V_{1B} is greater than V_{1A}, the ADE7761 selects V_{1B} as the input. The fault detection is automatically disabled when the voltage signal on Channel 1 is less than 0.3% of the full-scale input range. This eliminates false detection of a fault due to noise at light loads.

OBSOLETE

Fault with Active Input Greater than Inactive Input

If V_{1A} is the active current input (that is, being used for billing), and the voltage signal on V_{1B} (inactive input) falls below 93.75% of V_{1A}, the fault indicator becomes active. Both analog inputs are filtered and averaged to prevent false triggering of this logic output. As a consequence of the filtering, there is a time delay of approximately 3 s on the logic output FAULT after the fault event. The FAULT logic output is independent of any activity on outputs F1 or F2. Figure 26 shows one condition under which FAULT becomes active. Because V_{1A} is the active input and it is still greater than V_{1B}, billing is maintained on V_{1A}, that is, no swap to the V_{1B} input occurs. V_{1A} remains the active input.

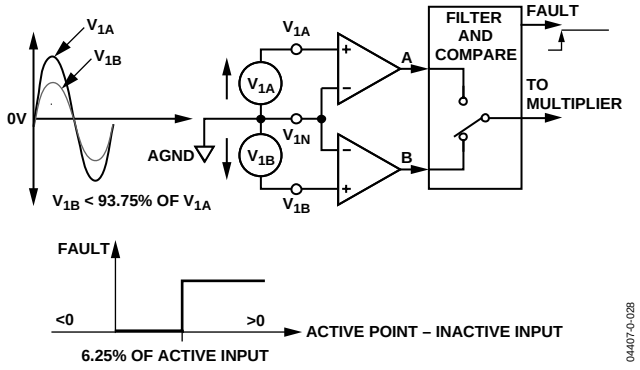

Figure 26. Fault Conditions for Active Input Greater than Inactive Input

Fault with Inactive Input Greater than Active Input

Figure 27 illustrates another fault condition. If the difference between V_{1B}, the inactive input, and V_{1A}, the active input (that is, being used for billing), becomes greater than 6.25% of V_{1B}, the FAULT indicator goes active, and there is also a swap over to the V_{1B} input. The analog input V_{1B} becomes the active input. Again, there is a time constant of about 3 s associated with this swap. V_{1A} does not swap back to being the active channel until V_{1A} is greater than V_{1B} and the difference between V_{1A} and V_{1B}—in this order—becomes greater than 6.25% of V_{1A}. However, the FAULT indicator becomes inactive as soon as V_{1A} is within 6.25% of V_{1B}. This threshold eliminates potential chatter between V_{1A} and V_{1B}.

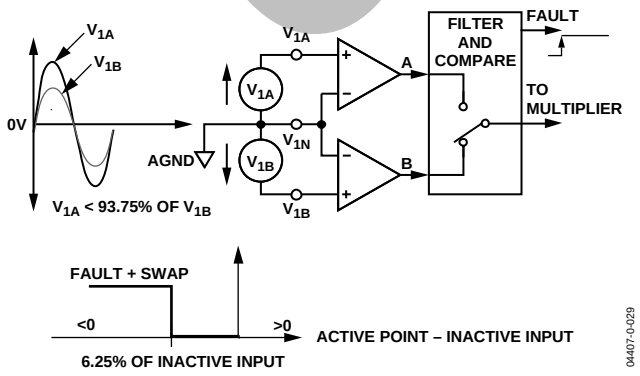

Figure 27. Fault Conditions for Inactive Input Greater than Active Input

Calibration Concerns

Typically, when a meter is being calibrated, the voltage and current circuits are separated as shown in Figure 28. This means that current passes through only the phase or neutral circuit. Figure 28 shows current being passed through the phase circuit. This is the preferred option, because the ADE7761 starts billing on the input V_{1A} on power-up. The phase circuit CT is connected to V_{1A} in the diagram. Since there is no current in the neutral circuit, the FAULT indicator comes on under these conditions. However, this does not affect the accuracy of the calibration and can be used as a means to test the functionality of the fault detection.

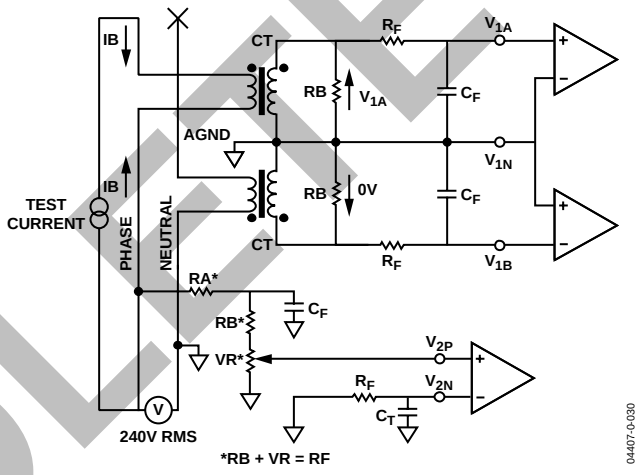

Figure 28. Fault Conditions for Inactive Input Greater than Active Input

If the neutral circuit is chosen for the current circuit in the arrangement shown in Figure 28, this may have implications for the calibration accuracy. The ADE7761 powers up with the V_{1A} input active as normal. However, because there is no current in the phase circuit, the signal on V_{1A} is zero. This causes a fault to be flagged and the active input to be swapped to V_{1B} (neutral). The meter can be calibrated in this mode, but the phase and neutral CTs might differ slightly. Because under no-fault conditions all billing is carried out using the phase CT, the meter should be calibrated using the phase circuit. Of course, both phase and neutral circuits can be calibrated.

MISSING NEUTRAL MODE

The ADE7761 integrates a novel fault detection that warns and allows the ADE7761 to continue to bill in case a meter is connected to only one wire (see Figure 29). For correct operation of the ADE7761 in this mode, the V_{DD} pin of the ADE7761 must be maintained within the specified range (5 V ± 5%). The missing neutral detection algorithm is designed to work over a line frequency of 45 Hz to 55 Hz.

OBSOLETE

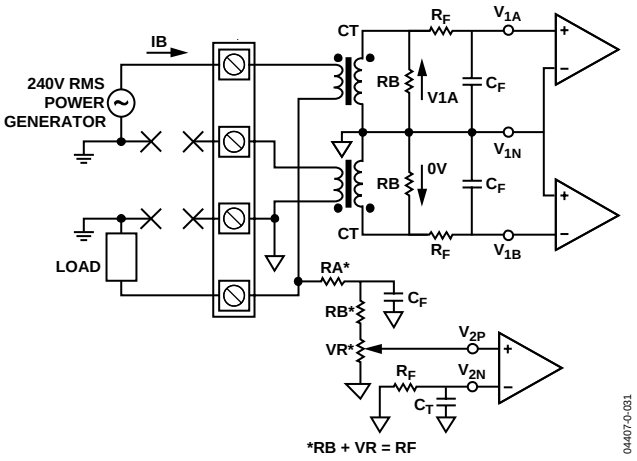

Figure 29. Missing Neutral System Diagram

The ADE7761 detects a missing neutral condition by continuously monitoring the voltage channel input (V_{2P}–V_{2N}). The FAULT pin is held high when a missing neutral condition is detected. In this mode, the ADE7761 continues to bill the energy based on the signal level on the current channel (see Figure 30). The billing rate or frequency outputs can be adjusted by changing the dc level on the MISCAL pin.

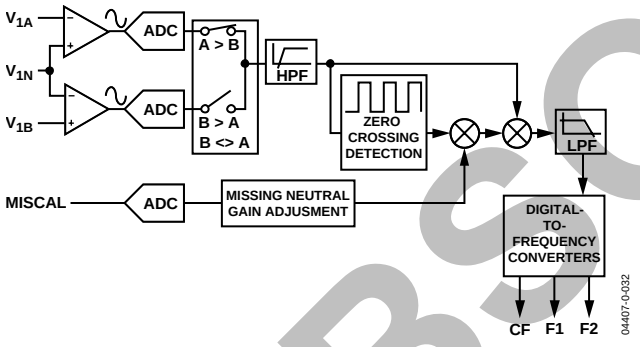

Figure 30. Energy Calculation in Missing Neutral Mode

Important Note for Billing of Active Energy

The ADE7761 provides pulse outputs—CF, F1, and F2—intended to be used for the billing of active energy. Pulses are generated at these outputs in two different situations.

Case 1: When the analog input $V_{2P} - V_{2N}$ complies with the conditions described in Figure 32, CF, F1, and F2 frequencies are proportional to active power and can be used to bill active energy.

Case 2: When the analog input $V_{2P} - V_{2N}$ does not comply with the conditions described in Figure 32, the ADE7761 does not measure active energy, but a quantity proportional to kAh. This quantity is used to generate pulses on the same CF, F1, and F2. This situation is indicated when the FAULT pin is high.

Analog Devices Inc. cautions users of the ADE7761:

- Billing active energy in Case 1 is consistent with the understanding of the quantity represented by pulses on CF, F1, and F2 outputs (watt-hour).
- Billing active energy while the ADE7761 is in Case 2 must be decided knowing that the entity measured by the ADE7761 in this case is ampere-hour and not watt-hour. Users should be aware of this limitation and decide if the ADE7761 is appropriate for their application.

Missing Neutral Detection

The ADE7761 continuously monitors the voltage input and detects a missing neutral condition when the voltage input peak value is smaller than 9% of the analog full scale or when no zero crossings are detected on this input (see Figure 31).

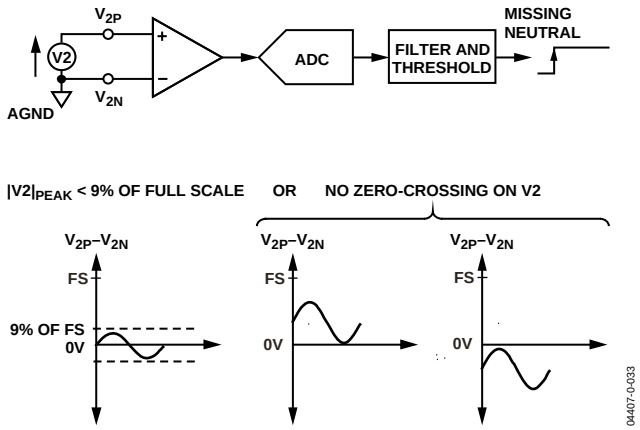

Figure 31. Missing Neutral Detection

OBSOLETE

The ADE7761 leaves the missing neutral mode for normal operation when both conditions are no longer valid—voltage peak value greater than 9% of full scale and zero crossing on the voltage channel detected (see Figure 32).

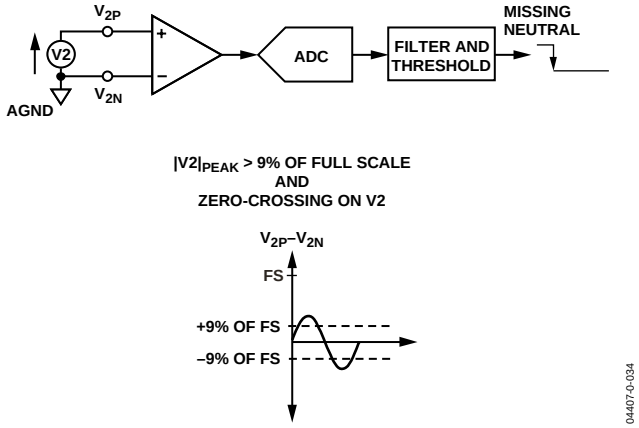

Figure 32. Return to Normal Mode after Missing Neutral Detection

Missing Neutral Gain Calibration

When the ADE7761 is in missing neutral mode, the energy is billed based on the active current input signal level. The calibration of the frequency outputs in this mode can be done with the MISCAL analog input pin. In this mode, applying a dc voltage of 330 mV on MISCAL is equivalent to applying, in normal mode, a pure sine wave on the voltage input with a peak value of 330 mV. The MISCAL input can vary from 0 V to 660 mV (see the Analog Inputs section). When set to 0 V, the frequency outputs are close to zero. When set to 660 mV dc, the frequency outputs are twice that when MISCAL is at 330 mV dc. In other words, Equation 7 can be used in missing neutral mode by replacing $V2_{rms}$ by $MISCAL_{rms}\sqrt{2}$:

$$F_1, F_2\ Frequency = \frac{5.70 \times MISCAL_{rms} / \sqrt{2} \times F_{1-4}}{V_{REF}^2} \quad (8)$$

where:

F_1, F_2 *Frequency* is the output frequency on F1 and F2 (Hz).
$V1_{rms}$ is the differential rms voltage signal on Channel 1 (V).
$MISCAL_{rms}$ is the differential rms voltage signal on the MISCAL pin (V).
V_{REF} is the reference voltage (2.5 V ± 8%) (V).
F_{1-4} is one of four possible frequencies selected by using the logic inputs S0 and S1 (see Table 5).

Example

In normal mode, ac voltages of ±330 mV peak are applied to V1 and V2, and then the expected output frequency on F1 and F2 is calculated as follows:

F_{1-4} = 1.7 Hz, $SCF = S1 = S0 = 0$

$V1$ = rms of 330 mV peak ac = $0.33/\sqrt{2}$ V

$V2$ = rms of 330 mV peak ac = $0.33/\sqrt{2}$ V

V_{REF} = 2.5 V (nominal reference value)

$$F_1, F_2\ Frequency = \frac{5.70 \times 0.33 \times 0.33 \times 1.7\ \text{Hz}}{\sqrt{2} \times \sqrt{2} \times 2.5^2} = 0.084\ \text{Hz}$$

$$CF\ Frequency = F_1 - F_2\ frequency \times 64 = 5.4\ \text{Hz}$$

In missing neutral mode, ac voltage of ±330 mV peak is applied to V1, no signal is connected on V2, and 330 mV dc input is applied to MISCAL. With the ADE7761 in the same configuration as the previous example, the expected output frequencies on CF, F1, and F2 are

$$F_1, F_2\ Frequency = \frac{5.70 \times 0.33 \times 0.33 / \sqrt{2} \times 1.7\ \text{Hz}}{\sqrt{2} \times 2.5^2} = 0.084\ \text{Hz}$$

$$CF\ Frequency = F_1, F_2\ frequency \times 64 = 5.4\ \text{Hz}$$

OBSOLETE

APPLICATIONS

INTERFACING TO A MICROCONTROLLER FOR ENERGY MEASUREMENT

The easiest way to interface the ADE7761 to a microcontroller is to use the CF high frequency output with the output frequency scaling set to 2048 × F1, F2. This is done by setting SCF = 0 and S0 = S1 = 1 (see Table 7). With full-scale ac signals on the analog inputs, the output frequency on CF is approximately 5.5 kHz. Figure 33 illustrates one scheme that could be used to digitize the output frequency and carry out the necessary averaging mentioned in the previous section.

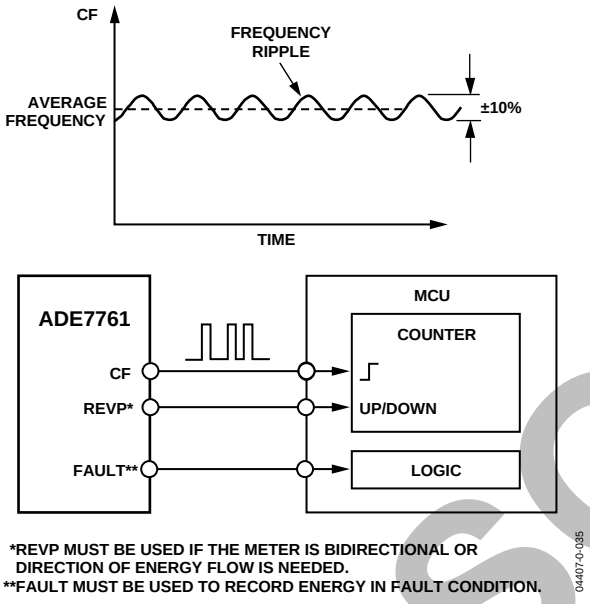

Figure 33. Interfacing the ADE7761 to an MCU

As shown, the frequency output CF is connected to an MCU counter or port, which counts the number of pulses in a given integration time, determined by an MCU internal timer. The average power, proportional to the average frequency, is given by

$$Average\,Frequency = Average\,Active\,Power = \frac{Counter}{Timer}$$

The energy consumed during an integration period is given by

$$Energy = Average\,Power \times Time = \frac{Counter}{Time} \times Time = Counter$$

For the purpose of calibration, this integration time could be 10 s to 20 s in order to accumulate enough pulses to ensure correct averaging of the frequency. In normal operation, the integration time could be reduced to 1 s or 2 s depending, for example, on the required update rate of a display. With shorter integration times on the MCU, the amount of energy in each update may still have a small amount of ripple, even under steady load conditions. However, over a minute or more, the measured energy has no ripple.

SELECTING A FREQUENCY FOR AN ENERGY METER APPLICATION

As shown in Table 5, the user can select one of four frequencies. This frequency selection determines the maximum frequency on F1 and F2. These outputs are intended to be used to drive the energy register (electromechanical or other). Because only four different output frequencies can be selected, the available frequency selection has been optimized for a meter constant of 100 impulses/kWh with a maximum current of between 10 A and 120 A. Table 8 shows the output frequency for several maximum currents (I_{MAX}) with a line voltage of 240 V. In all cases, the meter constant is 100 impulses/kWh.

Table 8. F1 and F2 Frequency at 100 Impulses/kWh

I_{MAX} (A)	F1 and F2 (Hz)
12.5	0.083
25	0.166
40	0.266
60	0.4
80	0.533
120	0.8

The F_{1-4} frequencies allow complete coverage of this range of output frequencies on F1 and F2. When designing an energy meter, the nominal design voltage on Channel 2 (voltage) should be set to half-scale to allow for calibration of the meter constant. The current channel should also be no more than half-scale when the meter sees maximum load, which accommodates overcurrent signals and signals with high crest factors. Table 9 shows the output frequency on F1 and F2 when both analog inputs are half-scale. The frequencies listed in Table 9 align well with those listed in Table 8 for maximum load.

OBSOLETE

Table 9. F1 and F2 Frequency with Half-Scale AC Inputs

S0	S1	F_{1-4}	Frequency on F1 and F2, Ch 1 and Ch 2, Half-Scale AC Inputs (Hz)
0	0	1.72	0.085
0	1	3.44	0.17
1	0	6.86	0.34
1	1	13.5	0.68

When selecting a suitable F_{1-4} frequency for a meter design, the frequency output at I_{MAX} (maximum load) with a meter constant of 100 impulses/kWh should be compared with Column 4 of Table 9. The frequency that is closest in Table 9 determines the best choice of frequency (F_{1-4}). For example, if a meter with a maximum current of 40 A is being designed, the output frequency on F1 and F2 with a meter constant of 100 impulses/kWh is 0.266 Hz at 40 A and 240 V (from Table 8). Looking at Table 9, the closest frequency to 0.266 Hz in Column 4 is 0.17 Hz. Therefore, F2 (3.4 Hz; see Table 5) is selected for this design.

Frequency Outputs

Figure 2 shows a timing diagram for the various frequency outputs. The high frequency CF output is intended to be used for communications and calibration purposes. CF produces a 90 ms wide, active high pulse (t_4) at a frequency that is proportional to active power. The CF output frequencies are given in Table 7. As in the case of F1 and F2, if the period of CF (t_5) falls below 180 ms, the CF pulse width is set to half the period. For example, if the CF frequency is 20 Hz, the CF pulse width is 25 ms.

No-Load Threshold

The ADE7761 includes a no-load threshold and startup current feature that eliminates creep effects in the meter. The ADE7761 is designed to issue a minimum output frequency. Any load generating a frequency lower than this minimum frequency does not cause a pulse to be issued on F1, F2, or CF. The minimum output frequency is given as 0.0045% of the full-scale output frequency. (See Table 7 for maximum output frequencies for ac signals).

For example, an energy meter with a meter constant of 100 impulses/kWh on F1, F2 using SCF = 1, S1 = 0, and S0 = 1, the maximum output frequency at F1 or F2 is 0.68 Hz and 43.52 Hz on CF. The minimum output frequency at F1 or F2 is 0.0045% of 0.68 Hz or 3.06×10^{-5} Hz. This is 1.96×10^{-3} Hz at CF (64 × F1 Hz).

In this example, the no-load threshold is equivalent to 1.1 W of load or a startup current of 4.6 mA at 240 V. Compare this value to the IEC61036 specification, which states that the meter must start up with a load equal to or less than 0.4% I_B. For a 5 A (I_B) meter, 0.4% of I_B is equivalent to 20 mA.

Note that the no-load threshold is not enabled when using the high CF frequency mode: SCF = 0, S1 = S0 = 1.

NEGATIVE POWER INFORMATION

The ADE7761 detects when the current and voltage channels have a phase shift greater than 90°. This mechanism can detect wrong connection of the meter or generation of negative power. The REVP pin output goes active high when negative power is detected, and active low when positive power is detected. The REVP pin output changes state as a pulse is issued on CF.

OBSOLETE

OUTLINE DIMENSIONS

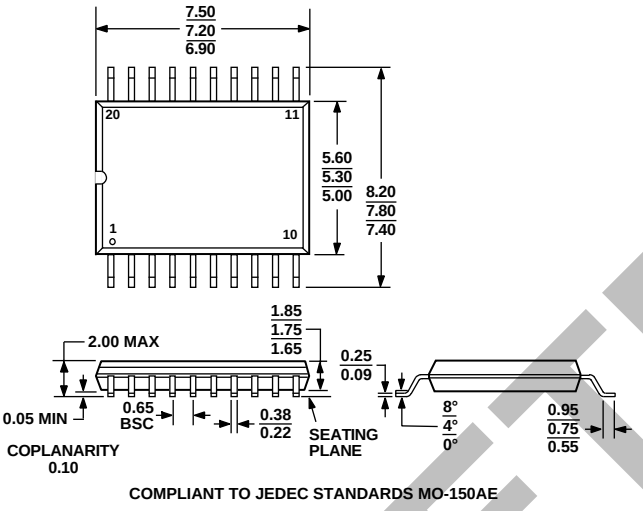

Figure 34. 20-Lead Shrink Small Outline Package [SSOP] (RS-20)
Dimensions shown in millimeters

ORDERING GUIDE

Model	Temperature Range	Package Description	Package Option
ADE7761ARS	−40°C to +85°C	Shrink Small Outline Package	RS-20
ADE7761ARSRL	−40°C to +85°C	Shrink Small Outline Package	RS-20
ADE7761ARS-REF		Reference Board	

OBSOLETE

DISCLAIMER

The ADE7761 provides pulse outputs—CF, F1, and F2—intended to be used for the billing of active energy. Pulses are generated at these outputs in two different situations.

Case 1: When the analog input $V_{2P} - V_{2N}$ complies with the conditions described in Figure 32, CF, F1, and F2 frequencies are proportional to active power and can be used to bill active energy.

Case 2: When the analog input $V_{2P} - V_{2N}$ does not comply with the conditions described in Figure 32, the ADE7761 does not measure active energy, but a quantity proportional to kAh. This quantity is used to generate pulses on the same CF, F1, and F2. This situation is indicated when the FAULT pin is high.

Analog Devices Inc. cautions users of the ADE7761:

- Billing active energy in Case 1 is consistent with the understanding of the quantity represented by pulses on CF, F1, and F2 outputs (watt-hour).
- Billing active energy while the ADE7761 is in Case 2 must be decided knowing that the entity measured by the ADE7761 in this case is ampere-hour and not watt-hour. Users should be aware of this limitation and decide if the ADE7761 is appropriate for their application.

OBSOLETE

NOTES

OBSOLETE

NOTES

OBSOLETE

© 2004 Analog Devices, Inc. All rights reserved. Trademarks and registered trademarks are the property of their respective owners.
D04407–0–2/04(A)

ANALOG DEVICES

www.analog.com