Littelfuse®
Expertise Applied | Answers Delivered

Schottky Barrier Rectifier
DST5200, 5A, 200V, TO-220AC, Single

DST5200

RoHS Pb

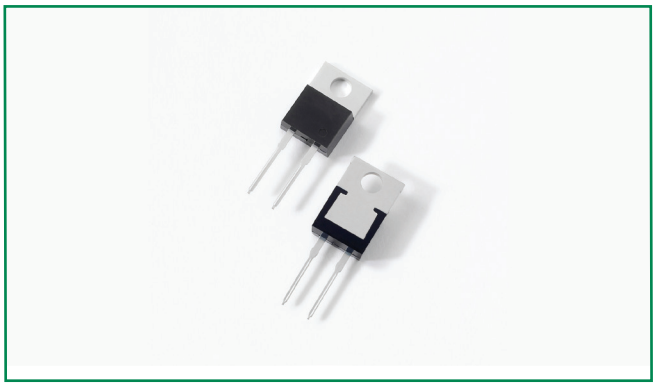

Pin out

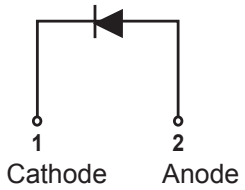

Description

Littelfuse DST series Ultra Low V_F Schottky Barrier Rectifier is designed to meet the general requirements of commercial and industry applications by providing high temperature, low leakage and lower V_F products.

It is suitable for high frequency switching mode power supply, free-wheeling diodes and polarity protection diodes.

Features

- Ultra low forward voltage drop
- High frequency operation
- High junction temperature capability
- Guard ring for enhanced ruggedness and long term reliability
- Single die in TO-220AC package

Applications

- Switching mode power supply
- DC/DC converters
- Free-Wheeling diodes
- Polarity Protection Diodes

Maximum Ratings

Parameters	Symbol	Test Conditions	Max	Unit
Peak Inverse Voltage	V_{RWM}	-	200	V
Average Forward Current (per device)	$I_{F(AV)}$	50% duty cycle @T_C =100°C rectangular wave form	5	A
Peak One Cycle Non-Repetitive Surge Current (per leg)	I_{FSM}	8.3 ms, half Sine pulse	120	A

Electrical Characteristics

Parameters	Symbol	Test Conditions	Typ	Max	Unit
Breakdown Voltage (per leg) *	V_{BR}	@I_R =1.0mA, T_J = 25 °C	200(Min)	-	V
Forward Voltage Drop (per leg) *	V_{F1}	@2.5A, Pulse, T_J = 25 °C	0.72	-	V
		@5A, Pulse, T_J = 25 °C	0.81	0.90	
	V_{F2}	@2.5A, Pulse, T_J = 125 °C	0.60	-	
		@5A, Pulse, T_J = 125 °C	0.67	0.73	
Reverse Current (per leg) *	I_{R1}	@V_R = rated V_R T_J = 25 °C	0.19	150	µA
	I_{R2}	@V_R = rated V_R T_J = 125 °C	0.33	10	mA

* Pulse Width < 300µs, Duty Cycle <2%

©2016 Littelfuse, Inc
Specifications are subject to change without notice.
Revised:02/03/16

Thermal-Mechanical Specifications

Parameters	Symbol	Test Conditions	Max	Unit
Junction Temperature	T_J		-55 to +150	°C
Storage Temperature	T_{stg}		-55 to +150	°C
Typical Thermal Resistance Junction to Case	R_{thJC}	DC operation	3.5	°C/W
Approximate Weight	wt		1.8	g
Case Style	TO-220AC			

Figure 1: Typical Forward Characteristics

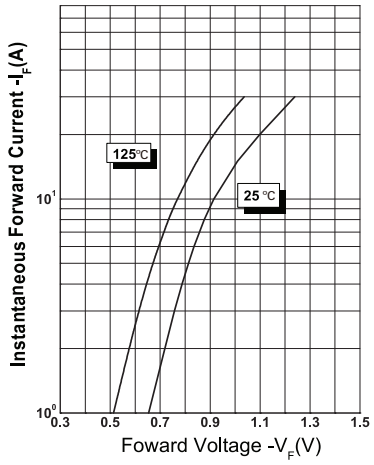

Figure 2: Typical Reverse Characteristics

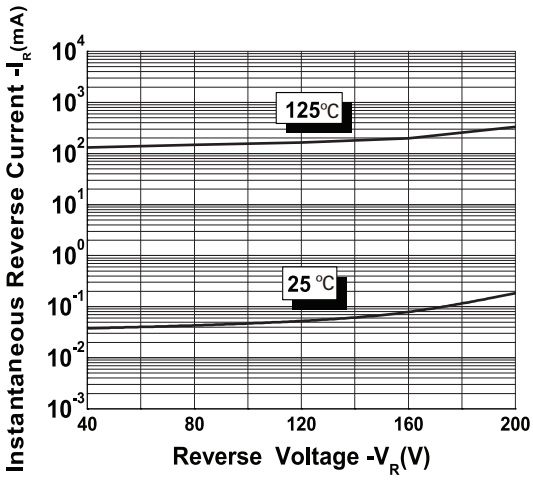

Figure 3: Typical Junction Capacitance

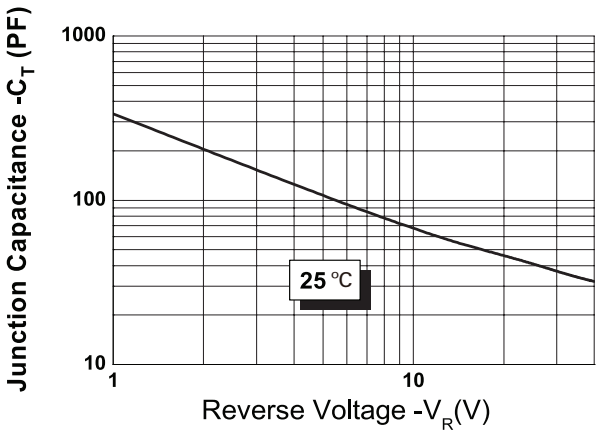

©2016 Littelfuse, Inc
Specifications are subject to change without notice.
Revised:02/03/16

Schottky Barrier Rectifier
DST5200, 5A, 200V, TO-220AC, Single

Dimensions-TO-220AC

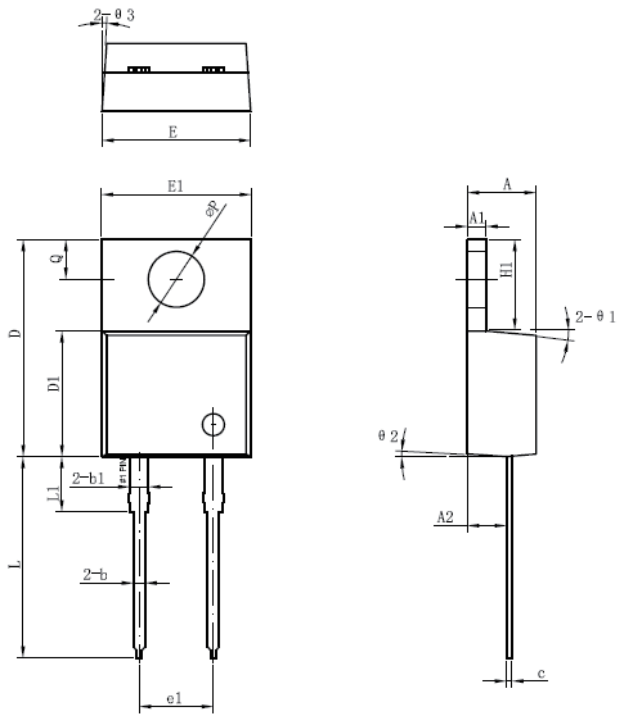

Symbol	Millimeters	
	Min	Max
A	3.56	4.83
A1	0.51	1.40
A2	2.03	2.92
b	0.38	1.02
b1	1.14	1.78
c	0.31*	0.61
D	14.22	16.51
D1	8.38	9.15*
E	9.65	10.67
e	2.54	-
e1	4.98*	-
H1	5.84	6.86
L	12.70	14.73
L1	-	6.35
øP	3.53	4.09
Q	2.54	3.43

Footnote *: The spec. does not comply with JEDEC spec.

Packing Options

Part Number	Marking	Packing Mode	M.O.Q
DST5200	DST5200	50pcs / Tube	1000

Tube Specification

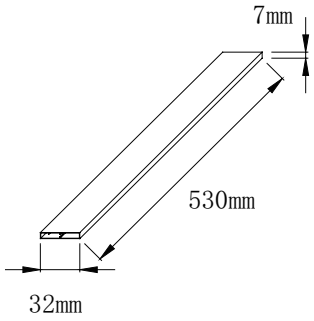

Part Numbering and Marking System

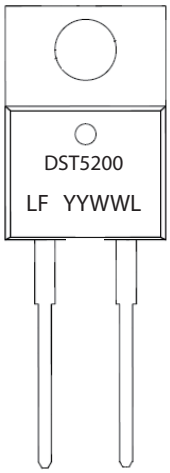

DST = Device Type
5 = Forward Current (5A)
200 = Reverse Voltage (200V)
LF = Littelfuse
YY = Year
WW = Week
L = Lot Number

©2016 Littelfuse, Inc
Specifications are subject to change without notice.
Revised:02/03/16