PI7C8140A

2-Port PCI-to-PCI Bridge

REVISION 1.01

3545 North First Street, San Jose, CA 95134
Telephone: 1-877-PERICOM, (1-877-737-4266)
Fax: 408-435-1100
Internet: http://www.pericom.com

07-0067

LIFE SUPPORT POLICY

Pericom Semiconductor Corporation's products are not authorized for use as critical components in life support devices or systems unless a specific written agreement pertaining to such intended use is executed between the manufacturer and an officer of PSC.

1) Life support devices or system are devices or systems which:
   a) Are intended for surgical implant into the body or
   b) Support or sustain life and whose failure to perform, when properly used in accordance with instructions for use provided in the labeling, can be reasonably expected to result in a significant injury to the user.
2) A critical component is any component of a life support device or system whose failure to perform can be reasonably expected to cause the failure of the life support device or system, or to affect its safety or effectiveness. Pericom Semiconductor Corporation reserves the right to make changes to its products or specifications at any time, without notice, in order to improve design or performance and to supply the best possible product. Pericom Semiconductor does not assume any responsibility for use of any circuitry described other than the circuitry embodied in a Pericom Semiconductor product. The Company makes no representations that circuitry described herein is free from patent infringement or other rights of third parties which may result from its use. No license is granted by implication or otherwise under any patent, patent rights or other rights, of Pericom Semiconductor Corporation.

All other trademarks are of their respective companies.

REVISION HISTORY

DATE	REVISION NUMBER	DESCRIPTION
11-13-2003	0.01	First Draft of Datasheet
03-04-2004	0.02	First release of datasheet
03-24-2004	0.03	Corrected reference to the retry counter register in section 2.5.3 from offset 78h to offset 88h. Corrected reference to the chip control register in section 2.5.4 from offset 40h to offset 44h. Changed/revised pin descriptions for P_CLKRUN# and S_CLKRUN# in section 1.2.3. Changed pin descriptions for SCAN_EN and SCAN_TM# in section 1.2.4. Revised pin description for LOO pin in section
05-07-2004	1.00	Added Power consumption and T_{SKEW} data Initial release of the datasheet to the web
03-20-2007	1.01	Removed solutions@pericom.com contact information Removed “Advance Information” from headers

PREFACE

The PI7C8140A datasheet will be enhanced periodically when updated information is available. The technical information in this datasheet is subject to change without notice. This document describes the functionalities of PI7C8140A and provides technical information for designers to design their hardware using PI7C8140A.

This page intentionally left blank.

TABLE OF CONTENTS

1 SIGNAL DEFINITIONS 11

1.1 SIGNAL TYPES 11
1.2 SIGNALS 11
1.2.1 PRIMARY BUS INTERFACE SIGNALS 11
1.2.2 SECONDARY BUS INTERFACE SIGNALS 12
1.2.3 CLOCK SIGNALS 14
1.2.4 MISCELLANEOUS SIGNALS 14
1.2.5 POWER AND GROUND 14
1.3 PIN LIST – 128-PIN QFP 15

2 PCI BUS OPERATION 16

2.1 TYPES OF TRANSACTIONS 16
2.2 SINGLE ADDRESS PHASE 17
2.3 DEVICE SELECT (DEVSEL#) GENERATION 17
2.4 DATA PHASE 17
2.5 WRITE TRANSACTIONS 17
2.5.1 MEMORY WRITE TRANSACTIONS 18
2.5.2 MEMORY WRITE AND INVALIDATE 18
2.5.3 DELAYED WRITE TRANSACTIONS 19
2.5.4 WRITE TRANSACTION BOUNDARIES 20
2.5.5 BUFFERING MULTIPLE WRITE TRANSACTIONS 20
2.5.6 FAST BACK-TO-BACK TRANSACTIONS 20
2.6 READ TRANSACTIONS 20
2.6.1 PREFETCHABLE READ TRANSACTIONS 21
2.6.2 DYNAMIC PREFETCHING CONTROL 21
2.6.3 NON-PREFETCHABLE READ TRANSACTIONS 21
2.6.4 READ PREFETCH ADDRESS BOUNDARIES 22
2.6.5 DELAYED READ REQUESTS 22
2.6.6 DELAYED READ COMPLETION WITH TARGET 23
2.6.7 DELAYED READ COMPLETION ON INITIATOR BUS 23
2.6.8 FAST BACK-TO-BACK READ TRANSACTIONS 24
2.7 CONFIGURATION TRANSACTIONS 24
2.7.1 TYPE 0 ACCESS TO PI7C8140A 25
2.7.2 TYPE 1 TO TYPE 0 CONVERSION 25
2.7.3 TYPE 1 TO TYPE 1 FORWARDING 26
2.7.4 SPECIAL CYCLES 27
2.8 TRANSACTION TERMINATION 27
2.8.1 MASTER TERMINATION INITIATED BY PI7C8140A 28
2.8.2 MASTER ABORT RECEIVED BY PI7C8140A 29
2.8.3 TARGET TERMINATION RECEIVED BY PI7C8140A 29
2.8.4 TARGET TERMINATION INITIATED BY PI7C8140A 31

3 ADDRESS DECODING 33

3.1 ADDRESS RANGES 33
3.2 I/O ADDRESS DECODING 33
3.2.1 I/O BASE AND LIMIT ADDRESS REGISTER 34
3.2.2 ISA MODE 34
3.3 MEMORY ADDRESS DECODING 35
3.3.1 MEMORY-MAPPED I/O BASE AND LIMIT ADDRESS REGISTERS 35
3.3.2 PREFETCHABLE MEMORY BASE AND LIMIT ADDRESS REGISTERS 36

3.4 VGA SUPPORT 37
3.4.1 VGA MODE 37
3.4.2 VGA SNOOP MODE 38

4 TRANSACTION ORDERING 38

4.1 TRANSACTIONS GOVERNED BY ORDERING RULES 38
4.2 GENERAL ORDERING GUIDELINES 39
4.3 ORDERING RULES 39
4.4 DATA SYNCHRONIZATION 41

5 ERROR HANDLING 41

5.1 ADDRESS PARITY ERRORS 41
5.2 DATA PARITY ERRORS 42
5.2.1 CONFIGURATION WRITE TRANSACTIONS TO CONFIGURATION SPACE 42
5.2.2 READ TRANSACTIONS 42
5.2.3 DELAYED WRITE TRANSACTIONS 43
5.2.4 POSTED WRITE TRANSACTIONS 45
5.3 DATA PARITY ERROR REPORTING SUMMARY 46
5.4 SYSTEM ERROR (SERR#) REPORTING 49

6 PCI BUS ARBITRATION 50

6.1 PRIMARY PCI BUS ARBITRATION 50
6.2 SECONDARY PCI BUS ARBITRATION 50
6.2.1 PREEMPTION 51
6.2.2 BUS PARKING 51

7 CLOCKS 51

7.1 PRIMARY CLOCK INPUTS 51
7.2 SECONDARY CLOCK OUTPUTS 52
7.3 PCI CLOCKRUN 52

8 COMPACT PCI HOT SWAP 52

9 PCI POWER MANAGEMENT 53

10 RESET 53

10.1 PRIMARY INTERFACE RESET 53
10.2 SECONDARY INTERFACE RESET 54
10.3 CHIP RESET 54

11 SUPPORTED COMMANDS 54

11.1 PRIMARY INTERFACE 55
11.2 SECONDARY INTERFACE 56

12 BRIDGE BEHAVIOR 56

12.1 BRIDGE ACTIONS FOR VARIOUS CYCLE TYPES 56
12.2 ABNORMAL TERMINATION (INITIATED BY BRIDGE MASTER) 57
12.2.1 MASTER ABORT 57
12.2.2 PARITY AND ERROR REPORTING 57
12.2.3 REPORTING PARITY ERRORS 57
12.2.4 SECONDARY IDSEL MAPPING 58

13 CONFIGURATION REGISTERS 59

13.1 REGISTER TYPES 59
13.2 CONFIGURATION REGISTER 59
13.2.1 VENDOR ID REGISTER – OFFSET 00h 60
13.2.2 DEVICE ID REGISTER – OFFSET 00h 60
13.2.3 COMMAND REGISTER – OFFSET 04h 60
13.2.4 PRIMARY STATUS REGISTER – OFFSET 04h 61
13.2.5 REVISION ID REGISTER – OFFSET 08h 62
13.2.6 CLASS CODE REGISTER – OFFSET 08h 62
13.2.7 CACHE LINE REGISTER – OFFSET 0Ch 62
13.2.8 PRIMARY LATENCY TIMER REGISTER – OFFSET 0Ch 62
13.2.9 HEADER TYPE REGISTER – OFFSET 0Ch 62
13.2.10 PRIMARY BUS NUMBER REGISTER – OFFSET 18h 62
13.2.11 SECONDARY BUS NUMBER REGISTER – OFFSET 18h 63
13.2.12 SUBORDINATE BUS NUMBER REGISTER – OFFSET 18h 63
13.2.13 SECONDARY LATENCY TIMER REGISTER – OFFSET 18h 63
13.2.14 I/O BASE ADDRESS REGISTER – OFFSET 1Ch 63
13.2.15 I/O LIMIT ADDRESS REGISTER – OFFSET 1Ch 63
13.2.16 SECONDARY STATUS REGISTER – OFFSET 1Ch 64
13.2.17 MEMORY BASE ADDRESS REGISTER – OFFSET 20h 64
13.2.18 MEMORY LIMIT ADDRESS REGISTER – OFFSET 20h 65
13.2.19 PREFETCHABLE MEMORY BASE ADDRESS REGISTER – OFFSET 24h 65
13.2.20 PREFETCHABLE MEMORY LIMIT ADDRESS REGISTER – OFFSET 24h 65
13.2.21 PREFETCHABLE MEMORY BASE ADDRESS UPPER 32-BITS REGISTER – OFFSET 28h 65
13.2.22 PREFETCHABLE MEMORY LIMIT ADDRESS UPPER 32-BITS REGISTER – OFFSET 2Ch 66
13.2.23 I/O BASE ADDRESS UPPER 16-BITS REGISTER – OFFSET 30h 66
13.2.24 I/O LIMIT ADDRESS UPPER 16-BITS REGISTER – OFFSET 30h 66
13.2.25 CAPABILITY POINTER REGISTER – OFFSET 34h 66
13.2.26 INTERRUPT LINE REGISTER – OFFSET 3Ch 66
13.2.27 INTERRUPT PIN REGISTER – OFFSET 3Ch 66
13.2.28 BRIDGE CONTROL REGISTER – OFFSET 3Ch 67
13.2.29 SUBSYSTEM VENDOR ID REGISTER – OFFSET 40h 68
13.2.30 SUBSYSTEM ID REGISTER – OFFSET 40h 68
13.2.31 DIAGNOSTIC/CHIP CONTROL REGISTER – OFFSET 44h 68
13.2.32 ARBITER CONTROL REGISTER – OFFSET 44h 70
13.2.33 EXTENDED CHIP CONTROL REGISTER – OFFSET 48h 70
13.2.34 SECONDARY BUS ARBITER PREEMPTION CONTROL REGISTER – OFFSET 4Ch 71
13.2.35 P_SERR# EVENT DISABLE REGISTER – OFFSET 64h 71
13.2.36 SECONDARY CLOCK CONTROL REGISTER – OFFSET 68h 72
13.2.37 P_SERR# STATUS REGISTER – OFFSET 68h 73
13.2.38 CLKRUN REGISTER – OFFSET 6Ch 74
13.2.39 PORT OPTION REGISTER – OFFSET 74h 74
13.2.40 CAPABILITY ID REGISTER – OFFSET 80h 76
13.2.41 NEXT ITEM POINTER REGISTER – OFFSET 80h 76
13.2.42 POWER MANAGEMENT CAPABILITIES REGISTER – OFFSET 80h 76
13.2.43 POWER MANAGEMENT DATA REGISTER – OFFSET 84h 77
13.2.44 PRIMARY MASTER TIMEOUT COUNTER REGISTER – OFFSET 88h 77
13.2.45 SECONDARY MASTER TIMEOUT COUNTER REGISTER – OFFSET 88h 77
13.2.46 CAPABILITY ID REGISTER – OFFSET 90h 77
13.2.47 NEXT ITEM POINTER REGISTER – OFFSET 90h 77
13.2.48 HOT SWAP CAPABILITY STRUCTURE REGISTER – OFFSET 90h 78
13.2.49 HOT SWAP SWITCH REGISTER – OFFSET 94h 78

13.2.50 MISCELLANEOUS CONTROL REGISTER – OFFSET C0h *78*

14 ELECTRICAL AND TIMING SPECIFICATIONS 79

14.1 MAXIMUM RATINGS 79
14.2 DC SPECIFICATIONS 79
14.3 AC SPECIFICATIONS 80
14.4 66MHZ TIMING 81
14.5 33MHZ TIMING 81
14.6 POWER CONSUMPTION 81

15 PACKAGE INFORMATION 82

15.1 128-PIN QFP PACKAGE OUTLINE 82
15.2 PART NUMBER ORDERING INFORMATION 82

LIST OF TABLES

TABLE 2-1. PCI TRANSACTIONS 16
TABLE 2-2. WRITE TRANSACTION FORWARDING 17
TABLE 2-3. WRITE TRANSACTION DISCONNECT ADDRESS BOUNDARIES 20
TABLE 2-4. READ PREFETCH ADDRESS BOUNDARIES 22
TABLE 2-5. READ TRANSACTION PREFETCHING 22
TABLE 2-6. DEVICE NUMBER TO IDSEL S_AD PIN MAPPING 26
TABLE 2-7. DELAYED WRITE TARGET TERMINATION RESPONSE 30
TABLE 2-8. RESPONSE TO POSTED WRITE TARGET TERMINATION 30
TABLE 2-9. RESPONSE TO DELAYED READ TARGET TERMINATION 31
TABLE 4-1. SUMMARY OF TRANSACTION ORDERING 40
TABLE 5-1. SETTING THE PRIMARY INTERFACE DETECTED PARITY ERROR BIT 46
TABLE 5-2. SETTING SECONDARY INTERFACE DETECTED PARITY ERROR BIT 46
TABLE 5-3. SETTING PRIMARY INTERFACE MASTER DATA PARITY ERROR DETECTED BIT 47
TABLE 5-4. SETTING SECONDARY INTERFACE MASTER DATA PARITY ERROR DETECTED BIT 47
TABLE 5-5. ASSERTION OF P_PERR# 48
TABLE 5-6. ASSERTION OF S_PERR# 48
TABLE 5-7. ASSERTION OF P_SERR# FOR DATA PARITY ERRORS 49
TABLE 8-1. POWER MANAGEMENT TRANSITIONS 53

LIST OF FIGURES

FIGURE 14-1 PCI SIGNAL TIMING MEASUREMENT CONDITIONS 80
FIGURE 15-1 128-PIN QFP PACKAGE OUTLINE 82

INTRODUCTION

Product Description

The PI7C8140A is Pericom Semiconductor's PCI-to-PCI Bridge, designed to be fully compliant with the 32-bit, 66MHz implementation of the *PCI Local Bus Specification, Revision 2.2*. The PI7C8140A supports synchronous bus transactions between devices on the Primary Bus and the Secondary Buses operating up to 66MHz. Both primary and secondary buses must operate at the same frequency. The primary and secondary buses can also operate in concurrent mode, resulting in added increase in system performance.

Product Features

- 32-bit Primary and Secondary Ports run up to 66MHz
- Compliant with the *PCI Local Bus Specification, Revision 2.2*
- Compliant with *PCI-to-PCI Bridge Architecture Specification*, Revision 1.1.
  - All I/O and memory commands
  - Type 1 to Type 0 configuration conversion
  - Type 1 to Type 1 configuration forwarding
  - Type 1 configuration write to special cycle conversion
- Compliant with the *Advanced Configuration Power Interface* (ACPI)
- Compliant with the *PCI Power Management Specification, Revision 1.1*.
- Provides internal arbitration for four secondary bus masters
  - Programmable 2-level priority arbiter
- PCI Clockrun support
- Supports posted write buffers in all directions
- Four 128 byte FIFO's for delay transactions
- Two 128 byte FIFO's for posted memory transactions
- Enhanced address decoding
- 32-bit I/O address range
- 32-bit memory-mapped I/O address range
- 64-bit prefetchable address range
- Extended commercial temperature range 0°C to 85°C
- 3.3V and 5V signaling
- 128-pin QFP package

This page intentionally left blank.

1 SIGNAL DEFINITIONS

1.1 SIGNAL TYPES

SIGNAL TYPE	DESCRIPTION
I	Input only
O	Output only
P	Power
TS	Tri-state bi-directional
STS	Sustained tri-state. Active LOW signal must be pulled HIGH for 1 cycle when deasserting.
OD	Open Drain

1.2 SIGNALS

Signals that end with "#" are active LOW.

1.2.1 PRIMARY BUS INTERFACE SIGNALS

Name	Pin Number	Type	Description
P_AD[31:0]	121, 122, 123, 124, 125, 126, 127, 2, 5, 6, 7, 8, 9, 10, 12, 13, 25, 26, 27, 28, 30, 31, 32, 33, 35, 36, 37, 40, 41, 42, 43, 44	TS	**Primary Address / Data:** Multiplexed address and data bus. Address is indicated by P_FRAME# assertion. Write data is stable and valid when P_IRDY# is asserted and read data is stable and valid when P_TRDY# is asserted. Data is transferred on rising clock edges when both P_IRDY# and P_TRDY# are asserted. During bus idle, PI7C8140A drives P_AD to a valid logic level when P_GNT# is asserted.
P_CBE#[3:0]	3, 14, 24, 34	TS	**Primary Command/Byte Enables:** Multiplexed command field and byte enable field. During address phase, the initiator drives the transaction type on these pins. After that, the initiator drives the byte enables during data phases. During bus idle, PI7C8140A drives P_CBE#[3:0] to a valid logic level when P_GNT# is asserted.
P_PAR	23	TS	**Primary Parity.** Parity is even across P_AD[31:0], P_CBE#[3:0], and P_PAR (i.e. an even number of 1's). P_PAR is an input and is valid and stable one cycle after the address phase (indicated by assertion of P_FRAME#) for address parity. For write data phases, P_PAR is an input and is valid one clock after P_IRDY# is asserted. For read data phase, P_PAR is an output and is valid one clock after P_TRDY# is asserted. Signal P_PAR is tri-stated one cycle after the P_AD lines are tri-stated. During bus idle, PI7C8140A drives P_PAR to a valid logic level when P_GNT# is asserted.
P_FRAME#	15	STS	**Primary FRAME (Active LOW).** Driven by the initiator of a transaction to indicate the beginning and duration of an access. The de-assertion of P_FRAME# indicates the final data phase requested by the initiator. Before being tri-stated, it is driven to a de-asserted state for one cycle.
P_IRDY#	16	STS	**Primary IRDY (Active LOW).** Driven by the initiator of a transaction to indicate its ability to complete current data phase on the primary side. Once asserted in a data phase, it is not de-asserted until the end of the data phase. Before tri-stated, it is driven to a de-asserted state for one cycle.

Name	Pin Number	Type	Description
P_TRDY#	17	STS	**Primary TRDY (Active LOW).** Driven by the target of a transaction to indicate its ability to complete current data phase on the primary side. Once asserted in a data phase, it is not de-asserted until the end of the data phase. Before tri-stated, it is driven to a de-asserted state for one cycle.
P_DEVSEL#	18	STS	**Primary Device Select (Active LOW).** Asserted by the target indicating that the device is accepting the transaction. As a master, PI7C8140A waits for the assertion of this signal within 5 cycles of P_FRAME# assertion; otherwise, terminate with master abort. Before tri-stated, it is driven to a de-asserted state for one cycle.
P_STOP#	19	I	**Primary STOP (Active LOW).** Asserted by the target indicating that the target is requesting the initiator to stop the current transaction. Before tri-stated, it is driven to a de-asserted state for one cycle.
P_IDSEL	4	I	**Primary ID Select.** Used as a chip select line for Type 0 configuration access to PI7C8140A configuration space.
P_PERR#	21	STS	**Primary Parity Error (Active LOW).** Asserted when a data parity error is detected for data received on the primary interface. Before being tri-stated, it is driven to a de-asserted state for one cycle.
P_SERR#	22	OD	**Primary System Error (Active LOW).** Can be driven LOW by any device to indicate a system error condition. PI7C8140A drives this pin on: ▪ Address parity error ▪ Posted write data parity error on target bus ▪ Secondary S_SERR# asserted ▪ Master abort during posted write transaction ▪ Target abort during posted write transaction ▪ Posted write transaction discarded ▪ Delayed write request discarded ▪ Delayed read request discarded ▪ Delayed transaction master timeout This signal requires an external pull-up resistor for proper operation.
P_REQ#	119	TS	**Primary Request (Active LOW):** This is asserted by PI7C8140A to indicate that it wants to start a transaction on the primary bus. PI7C8140A de-asserts this pin for at least 2 PCI clock cycles before asserting it again.
P_GNT#	118	I	**Primary Grant (Active LOW):** When asserted, PI7C8140A can access the primary bus. During idle and P_GNT# asserted, PI7C8140A will drive P_AD, P_CBE, and P_PAR to valid logic levels.
P_RST#	116	I	**Primary RESET (Active LOW):** When P_RST# is active, all PCI signals should be asynchronously tri-stated.

1.2.2 SECONDARY BUS INTERFACE SIGNALS

Name	Pin Number	Type	Description
S_AD[31:0]	95, 94, 92, 91, 90, 89, 88, 87, 85, 83, 82, 81, 80, 79, 78, 77, 63, 62, 61, 60, 59, 57, 56, 55, 53, 52, 51, 50, 48, 47, 46, 45	TS	**Secondary Address/Data:** Multiplexed address and data bus. Address is indicated by S_FRAME# assertion. Write data is stable and valid when S_IRDY# is asserted and read data is stable and valid when S_TRDY# is asserted. Data is transferred on rising clock edges when both S_IRDY# and S_TRDY# are asserted. During bus idle, PI7C8140A drives S_AD to a valid logic level when S_GNT# is asserted respectively.
S_CBE#[3:0]	86, 76, 66, 54	TS	**Secondary Command/Byte Enables:** Multiplexed command field and byte enable field. During address phase, the initiator drives the transaction type on these pins. The initiator then drives the byte enables during data phases. During bus idle, PI7C8140A drives S_CBE#[3:0] to a valid logic level when the internal grant is asserted.

Name	Pin Number	Type	Description
S_PAR	67	TS	**Secondary Parity:** Parity is even across S_AD[31:0], S_CBE#[3:0], and S_PAR (i.e. an even number of 1's). S_PAR is an input and is valid and stable one cycle after the address phase (indicated by assertion of S_FRAME#) for address parity. For write data phases, S_PAR is an input and is valid one clock after S_IRDY# is asserted. For read data phase, S_PAR is an output and is valid one clock after S_TRDY# is asserted. Signal S_PAR is tri-stated one cycle after the S_AD lines are tri-stated. During bus idle, PI7C8140A drives S_PAR to a valid logic level when the internal grant is asserted.
S_FRAME#	74	STS	**Secondary FRAME (Active LOW):** Driven by the initiator of a transaction to indicate the beginning and duration of an access. The de-assertion of S_FRAME# indicates the final data phase requested by the initiator. Before being tri-stated, it is driven to a de-asserted state for one cycle.
S_IRDY#	73	STS	**Secondary IRDY (Active LOW):** Driven by the initiator of a transaction to indicate its ability to complete current data phase on the secondary side. Once asserted in a data phase, it is not de-asserted until the end of the data phase. Before tri-stated, it is driven to a de-asserted state for one cycle.
S_TRDY#	72	STS	**Secondary TRDY (Active LOW):** Driven by the target of a transaction to indicate its ability to complete current data phase on the secondary side. Once asserted in a data phase, it is not de-asserted until the end of the data phase. Before tri-stated, it is driven to a de-asserted state for one cycle.
S_DEVSEL#	71	STS	**Secondary Device Select (Active LOW):** Asserted by the target indicating that the device is accepting the transaction. As a master, PI7C8140A waits for the assertion of this signal within 5 cycles of S_FRAME# assertion; otherwise, terminate with master abort. Before tri-stated, it is driven to a de-asserted state for one cycle.
S_STOP#	70	STS	**Secondary STOP (Active LOW):** Asserted by the target indicating that the target is requesting the initiator to stop the current transaction. Before tri-stated, it is driven to a de-asserted state for one cycle.
S_PERR#	69	STS	**Secondary Parity Error (Active LOW):** Asserted when a data parity error is detected for data received on the secondary interface. Before being tri-stated, it is driven to a de-asserted state for one cycle.
S_SERR#	68	I	**Secondary System Error (Active LOW):** Can be driven LOW by any device to indicate a system error condition.
S_REQ#[3:0]	99, 98, 97, 96	I	**Secondary Request (Active LOW):** This is asserted by an external device to indicate that it wants to start a transaction on the secondary bus. The input is externally pulled up through a resistor to VDD.
S_GNT#[3:0]	104, 103, 101, 100	TS	**Secondary Grant (Active LOW):** PI7C8140A asserts these pins to allow external masters to access the secondary bus. PI7C8140A de-asserts these pins for at least 2 PCI clock cycles before asserting it again. During idle and S_GNT# deasserted, PI7C8140A will drive S_AD, S_CBE, and S_PAR.
S_RST#	105	O	**Secondary RESET (Active LOW):** Asserted when any of the following conditions are met: 1. Signal P_RESET# is asserted. 2. Secondary reset bit in bridge control register in configuration space is set. When asserted, all control signals are tri-stated and zeroes are driven on S_AD, S_CBE, and S_PAR.

1.2.3 CLOCK SIGNALS

Name	Pin Number	Type	Description
P_CLK	117	I	**Primary Clock Input:** Provides timing for all transactions on the primary interface.
S_CLKOUT[3:0]	110, 109, 108, 107	O	**Secondary Clock Output:** Provides secondary clocks phase synchronous with the P_CLK.
P_CLKRUN#	115	TS	**Primary Clock Run:** Allows main system to stop the primary clock based on the specifications in the *PCI Mobile Design Guide*, Revision 1.0. If unused, this pin should be tied to ground to signify that P_CLK is always running.
S_CLKRUN#	112	TS	**Secondary Clock Run:** Allows main system to slow down or stop the secondary clock and is controlled by the primary or bit[4] offset 6Fh. If the secondary devices do not support CLKRUN, this pin should be pulled LOW by a 300 ohm resistor.

1.2.4 MISCELLANEOUS SIGNALS

Name	Pin Number	Type	Description
ENUM#	113	O	**Hot Swap Status Indicator:** The output of ENUM# indicates to the system that an insertion has occurred or that an extraction is about to occur.
LOO	114	I/O	**Hot Swap LED:** The output of this pin lights an LED to indicate insertion or removal ready status. This pin may also be used as a input or detect pin. Every 500us, the pin tri-states for 8 primary PCI clock cycles to sample the status.
SCAN_TM#	65	I	**Full-Scan Test Mode Enable:** For normal operation, pull SCAN_TM# to HIGH. Manufacturing test pin.
SCAN_EN	106	I/O	**Full-Scan Enable Control:** For normal operation, SCAN_TM# should be pulled HIGH and SCAN_EN becomes an output with logic 0. Manufacturing test pin.

1.2.5 POWER AND GROUND

Name	Pin Number	Type	Description
VDD	1, 20, 39, 58, 84, 102, 120	P	**Power:** 3.3V power
VSS	11, 29, 38, 49, 64, 75, 93, 111, 128	P	**Ground**

1.3 PIN LIST – 128-PIN QFP

Pin Number	Name	Type	Pin Number	Name	Type
1	VDD	P	2	P_AD[24]	TS
3	P_CBE#[3]	TS	4	P_IDSEL	I
5	P_AD[23]	TS	6	P_AD[22]	TS
7	P_AD[21]	TS	8	P_AD[20]	TS
9	P_AD[19]	TS	10	P_AD[18]	TS
11	VSS	P	12	P_AD[17]	TS
13	P_AD[16]	TS	14	P_CBE#[2]	TS
15	P_FRAME#	STS	16	P_IRDY#	STS
17	T_RDY#	STS	18	P_DEVSEL#	STS
19	P_STOP#	I	20	VDD	P
21	P_PERR#	STS	22	P_SERR#	OD
23	P_PAR	TS	24	P_CBE#[1]	TS
25	P_AD[15]	TS	26	P_AD[14]	TS
27	P_AD[13]	TS	28	P_AD[12]	TS
29	VSS	P	30	P_AD[11]	TS
31	P_AD[10]	TS	32	P_AD[9]	TS
33	P_AD[8]	TS	34	P_CBE#[0]	TS
35	P_AD[7]	TS	36	P_AD[6]	TS
37	P_AD[5]	TS	38	VSS	P
39	VDD	P	40	P_AD[4]	TS
41	P_AD[3]	TS	42	P_AD[2]	TS
43	P_AD[1]	TS	44	P_AD[0]	TS
45	S_AD[0]	TS	46	S_AD[1]	TS
47	S_AD[2]	TS	48	S_AD[3]	TS
49	VSS	P	50	S_AD[4]	TS
51	S_AD[5]	TS	52	S_AD[6]	TS
53	S_AD[7]	TS	54	S_CBE#[0]	TS
55	S_AD[8]	TS	56	S_AD[9]	TS
57	S_AD[10]	TS	58	VDD	P
59	S_AD[11]	TS	60	S_AD[12]	TS
61	S_AD[13]	TS	62	S_AD[14]	TS
63	S_AD[15]	TS	64	VSS	P
65	SCAN_TM#	I	66	S_CBE#[1]	TS
67	S_PAR	TS	68	S_SERR#	I
69	S_PERR#	STS	70	S_STOP#	STS
71	S_DEVSEL#	STS	72	S_TRDY#	STS
73	S_IRDY#	STS	74	S_FRAME#	STS
75	VSS	P	76	S_CBE#[2]	TS
77	S_AD[16]	TS	78	S_AD[17]	TS
79	S_AD[18]	TS	80	S_AD[19]	TS
81	S_AD[20]	TS	82	S_AD[21]	TS
83	S_AD[22]	TS	84	VDD	P
85	S_AD[23]	TS	86	S_CBE#[3]	TS
87	S_AD[24]	TS	88	S_AD[25]	TS
89	S_AD[26]	TS	90	S_AD[27]	TS
91	S_AD[28]	TS	92	S_AD[29]	TS
93	VSS	P	94	S_AD[30]	TS
95	S_AD[31]	TS	96	S_REQ#[0]	I
97	S_REQ#[1]	I	98	S_REQ#[2]	I
99	S_REQ#[3]	I	100	S_GNT#[0]	TS
101	S_GNT#[1]	TS	102	VDD	P
103	S_GNT#[2]	TS	104	S_GNT#[3]	TS
105	S_RST#	O	106	SCAN_EN	I/O
107	S_CLKOUT[0]	O	108	S_CLKOUT[1]	O
109	S_CLKOUT[2]	O	110	S_CLKOUT[3]	O
111	VSS	P	112	S_CLKRUN#	TS
113	ENUM#	O	114	LOO	I/O

Pin Number	Name	Type	Pin Number	Name	Type
115	P_CLKRUN#	TS	116	P_RST#	I
117	P_CLK	I	118	P_GNT#	I
119	P_REQ#	TS	120	VDD	P
121	P_AD[31]	TS	122	P_AD[30]	TS
123	P_AD[29]	TS	124	P_AD[28]	TS
125	P_AD[27]	TS	126	P_AD[26]	TS
127	P_AD[25]	TS	128	VSS	P

2 PCI BUS OPERATION

This Chapter offers information about PCI transactions, transaction forwarding across the bridge, and transaction termination. The bridge has two 128-byte FIFO's for buffering of upstream and downstream transactions. These hold addresses, data, commands, and byte enables that are used for write transactions. The bridge also has an additional four 128-byte FIFO's that hold addresses, data, commands, and byte enables for read transactions.

2.1 TYPES OF TRANSACTIONS

This section provides a summary of PCI transactions performed by the bridge. Table 2-1 lists the command code and name of each PCI transaction. The Master and Target columns indicate support for each transaction when the bridge initiates transactions as a master, on the primary (P) and secondary (S) buses, and when the bridge responds to transactions as a target, on the primary (P) and secondary (S) buses.

Table 2-1. PCI Transactions

Types of Transactions		Initiates as Master		Responds as Target	
		Primary	Secondary	Primary	Secondary
0000	Interrupt Acknowledge	N	N	N	N
0001	Special Cycle	Y	Y	N	N
0010	I/O Read	Y	Y	Y	Y
0011	I/O Write	Y	Y	Y	Y
0100	Reserved	N	N	N	N
0101	Reserved	N	N	N	N
0110	Memory Read	Y	Y	Y	Y
0111	Memory Write	Y	Y	Y	Y
1000	Reserved	N	N	N	N
1001	Reserved	N	N	N	N
1010	Configuration Read	N	Y	Y	N
1011	Configuration Write	Y (Type 1 only)	Y	Y	Y (Type 1 only)
1100	Memory Read Multiple	Y	Y	Y	Y
1101	Dual Address Cycle	Y	Y	Y	Y
1110	Memory Read Line	Y	Y	Y	Y
1111	Memory Write and Invalidate	Y	Y	Y	Y

As indicated in Table 2-1, the following PCI commands are not supported by the bridge:

- The bridge never initiates a PCI transaction with a reserved command code and, as a target, the bridge ignores reserved command codes.
- The bridge does not generate interrupt acknowledge transactions. The bridge ignores interrupt acknowledge transactions as a target.

- The bridge does not respond to special cycle transactions. The bridge cannot guarantee delivery of a special cycle transaction to downstream buses because of the broadcast nature of the special cycle command and the inability to control the transaction as a target. To generate special cycle transactions on other PCI buses, either upstream or downstream, Type 1 configuration write must be used.
- The bridge neither generates Type 0 configuration transactions on the primary PCI bus nor responds to Type 0 configuration transactions on the secondary PCI buses.

2.2 SINGLE ADDRESS PHASE

A 32-bit address uses a single address phase. This address is driven on P_AD[31:0], and the bus command is driven on P_CBE[3:0]. The bridge supports the linear increment address mode only, which is indicated when the lowest two address bits are equal to zero. If either of the lowest two address bits is nonzero, the bridge automatically disconnects the transaction after the first data transfer.

2.3 DEVICE SELECT (DEVSEL#) GENERATION

The bridge always performs positive address decoding (medium decode) when accepting transactions on either the primary or secondary buses. The bridge never does subtractive decode.

2.4 DATA PHASE

The address phase of a PCI transaction is followed by one or more data phases. A data phase is completed when IRDY# and either TRDY# or STOP# are asserted. A transfer of data occurs only when both IRDY# and TRDY# are asserted during the same PCI clock cycle. The last data phase of a transaction is indicated when FRAME# is de-asserted and both TRDY# and IRDY# are asserted, or when IRDY# and STOP# are asserted. See Section 2.8 for further discussion of transaction termination.

Depending on the command type, the bridge can support multiple data phase PCI transactions. For detailed descriptions of how the bridge imposes disconnect boundaries, see Section 2.5.4 for write address boundaries and Section 2.6.4 read address boundaries.

2.5 WRITE TRANSACTIONS

Write transactions are treated as either posted write or delayed write transactions. Table 2-2 shows the method of forwarding used for each type of write operation.

Table 2-2. Write Transaction Forwarding

Type of Transaction	Type of Forwarding
Memory Write	Posted (except VGA memory)
Memory Write and Invalidate	Posted
Memory Write to VGA memory	Delayed
I/O Write	Delayed
Type 1 Configuration Write	Delayed

2.5.1 MEMORY WRITE TRANSACTIONS

Posted write forwarding is used for “Memory Write” and “Memory Write and Invalidate” transactions.

When the bridge determines that a memory write transaction is to be forwarded across the bridge, the bridge asserts DEVSEL# with medium timing and TRDY# in the next cycle, provided that enough buffer space is available in the posted memory write queue for the address and at least one DWORD of data. Under this condition, the bridge accepts write data without obtaining access to the target bus. The bridge can accept one DWORD of write data every PCI clock cycle. That is, no target wait state is inserted. The write data is stored in an internal posted write buffers and is subsequently delivered to the target. The bridge continues to accept write data until one of the following events occurs:

- The initiator terminates the transaction by de-asserting FRAME# and IRDY#.
- An internal write address boundary is reached, such as a cache line boundary or an aligned 4KB boundary, depending on the transaction type.
- The posted write data buffer fills up.

When one of the last two events occurs, the bridge returns a target disconnect to the requesting initiator on this data phase to terminate the transaction.

Once the posted write data moves to the head of the posted data queue, the bridge asserts its request on the target bus. This can occur while the bridge is still receiving data on the initiator bus. When the grant for the target bus is received and the target bus is detected in the idle condition, the bridge asserts FRAME# and drives the stored write address out on the target bus. On the following cycle, the bridge drives the first DWORD of write data and continues to transfer write data until all write data corresponding to that transaction is delivered, or until a target termination is received. As long as write data exists in the queue, the bridge can drive one DWORD of write data each PCI clock cycle; that is, no master wait states are inserted. If write data is flowing through the bridge and the initiator stalls, the bridge will signal the last data phase for the current transaction at the target bus if the queue empties. The bridge will restart the follow-on transactions if the queue has new data.

The bridge ends the transaction on the target bus when one of the following conditions is met:

- All posted write data has been delivered to the target.
- The target returns a target disconnect or target retry (the bridge starts another transaction to deliver the rest of the write data).
- The target returns a target abort (the bridge discards remaining write data).
- The master latency timer expires, and the bridge no longer has the target bus grant (the bridge starts another transaction to deliver remaining write data).

Section 2.8.3.2 provides detailed information about how the bridge responds to target termination during posted write transactions.

2.5.2 MEMORY WRITE AND INVALIDATE

Posted write forwarding is used for Memory Write and Invalidate transactions.

If offset 74h bits [8:7] = 11, the bridge disconnects Memory Write and Invalidate commands at aligned cache line boundaries. The cache line size value in the cache line size register gives the number of DWORD in a cache line.

If offset 74h bits [8:7] = 00, the bridge converts Memory Write and Invalidate transactions to Memory Write transactions at the destination.

If the value in the cache line size register does meet the memory write and invalidate conditions, the bridge returns a target disconnect to the initiator on a cache line boundary.

2.5.3 DELAYED WRITE TRANSACTIONS

Delayed write forwarding is used for I/O write transactions and Type 1 configuration write transactions.

A delayed write transaction guarantees that the actual target response is returned back to the initiator without holding the initiating bus in wait states. A delayed write transaction is limited to a single DWORD data transfer.

When a write transaction is first detected on the initiator bus, and the bridge forwards it as a delayed transaction, the bridge claims the access by asserting DEVSEL# and returns a target retry to the initiator. During the address phase, the bridge samples the bus command, address, and address parity one cycle later. After IRDY# is asserted, the bridge also samples the first data DWORD, byte enable bits, and data parity. This information is placed into the delayed transaction queue. The transaction is queued only if no other existing delayed transactions have the same address and command, and if the delayed transaction queue is not full. When the delayed write transaction moves to the head of the delayed transaction queue and all ordering constraints with posted data are satisfied. The bridge initiates the transaction on the target bus. The bridge transfers the write data to the target. If the bridge receives a target retry in response to the write transaction on the target bus, it continues to repeat the write transaction until the data transfer is completed, or until an error condition is encountered.

If the bridge is unable to deliver write data after 2^{24} (default) or 2^{32} (maximum) attempts, the bridge will report a system error. The bridge also asserts P_SERR# if the primary SERR# enable bit is set in the command register. See Section 5.4 for information on the assertion of P_SERR#. When the initiator repeats the same write transaction (same command, address, byte enable bits, and data), and the completed delayed transaction is at the head of the queue, the bridge claims the access by asserting DEVSEL# and returns TRDY# to the initiator, to indicate that the write data was transferred. If the initiator requests multiple DWORD, the bridge also asserts STOP# in conjunction with TRDY# to signal a target disconnect. Note that only those bytes of write data with valid byte enable bits are compared. If any of the byte enable bits are turned off (driven HIGH), the corresponding byte of write data is not compared.

If the initiator repeats the write transaction before the data has been transferred to the target, the bridge returns a target retry to the initiator. The bridge continues to return a target retry to the initiator until write data is delivered to the target, or until an error condition is encountered. When the write transaction is repeated, the bridge does not make a new entry into the delayed transaction queue. Section 2.8.3.1 provides detailed information about how the bridge responds to target termination during delayed write transactions.

The bridge implements a discard timer that starts counting when the delayed write completion is at the head of the delayed transaction completion queue. The initial value of this timer can be set to the retry counter register offset 88h.

If the initiator does not repeat the delayed write transaction before the discard timer expires, the bridge

discards the delayed write completion from the delayed transaction completion queue. The bridge also conditionally asserts P_SERR# (see Section 5.4).

2.5.4 WRITE TRANSACTION BOUNDARIES

The bridge imposes internal address boundaries when accepting write data. The aligned address boundaries are used to prevent the bridge from continuing a transaction over a device address boundary and to provide an upper limit on maximum latency. The bridge returns a target disconnect to the initiator when it reaches the aligned address boundaries under conditions shown in Table 2-3.

Table 2-3. Write Transaction Disconnect Address Boundaries

Type of Transaction	Condition	Aligned Address Boundary
Delayed Write	All	Disconnects after one data transfer
Posted Memory Write	Memory write disconnect control bit = 0(1)	4KB aligned address boundary
Posted Memory Write	Memory write disconnect control bit = 1(1)	Disconnects at cache line boundary
Posted Memory Write and Invalidate	Cache line size ≠ 1, 2, 4, 8, 16	4KB aligned address boundary
Posted Memory Write and Invalidate	Cache line size = 1, 2, 4, 8, 16	Cache line boundary if posted memory write data FIFO does not have enough space for the cache line

Note 1. Memory write disconnect control bit is bit 1 of the chip control register at offset 44h in the configuration space.

2.5.5 BUFFERING MULTIPLE WRITE TRANSACTIONS

The bridge continues to accept posted memory write transactions as long as space for at least one DWORD of data in the posted write data buffer remains. If the posted write data buffer fills before the initiator terminates the write transaction, the bridge returns a target disconnect to the initiator.

Delayed write transactions are posted as long as at least one open entry in the delayed transaction queue exists. Therefore, several posted and delayed write transactions can exist in data buffers at the same time. See Chapter 5 for information about how multiple posted and delayed write transactions are ordered.

2.5.6 FAST BACK-TO-BACK TRANSACTIONS

The bridge can recognize and post fast back-to-back write transactions. When the bridge cannot accept the second transaction because of buffer space limitations, it returns a target retry to the initiator. The fast back-to-back enable bit must be set in the command register for upstream write transactions, and in the bridge control register for downstream write transactions.

2.6 READ TRANSACTIONS

Delayed read forwarding is used for all read transactions crossing the bridge. Delayed read transactions are treated as either prefetchable or non-prefetchable. Table 2-5 shows the read behavior, prefetchable or non-prefetchable, for each type of read operation.

2.6.1 PREFETCHABLE READ TRANSACTIONS

A prefetchable read transaction is a read transaction where the bridge performs speculative DWORD reads, transferring data from the target before it is requested from the initiator. This behavior allows a prefetchable read transaction to consist of multiple data transfers. However, byte enable bits cannot be forwarded for all data phases as is done for the single data phase of the non-prefetchable read transaction. For prefetchable read transactions, the bridge forces all byte enable bits to be turned on for all data phases.

Prefetchable behavior is used for memory read line and memory read multiple transactions, as well as for memory read transactions that fall into prefetchable memory space.

The amount of data that is pre-fetched depends on the type of transaction. The amount of pre-fetching may also be affected by the amount of free buffer space available in the bridge, and by any read address boundaries encountered.

Pre-fetching should not be used for those read transactions that have side effects in the target device, that is, control and status registers, FIFO's, and so on. The target device's base address register or registers indicate if a memory address region is prefetchable.

2.6.2 DYNAMIC PREFETCHING CONTROL

For prefetchable reads described in the previous section, the prefetching length is normally predefined and cannot be changed once it is set. This may cause some inefficiency as the prefetching length determined could be larger or smaller than the actual data being prefetched. To make prefetching more efficient, PI7C8140A incorporates dynamic prefetching control logic. This logic regulates the different PCI memory read commands (MR – memory read, MRL – memory read line, and MRM – memory read multiple) to improve memory read burst performance. The bridge tracks every memory read burst transaction and tallies the status. By using the status information, the bridge can determine to increase, reduce, or keep the same cache line length to be prefetched. Over time, the bridge can better match the correct cache line setting to the length of data being requested. The dynamic prefetching control logic is set with bits[3:2] offset 48h.

2.6.3 NON-PREFETCHABLE READ TRANSACTIONS

A non-prefetchable read transaction is a read transaction where the bridge requests one and only one DWORD from the target and disconnects the initiator after delivery of the first DWORD of read data. Unlike prefetchable read transactions, the bridge forwards the read byte enable information for the data phase.

Non-prefetchable behavior is used for I/O and configuration read transactions, as well as for memory read transactions that fall into non-prefetchable memory space.

If extra read transactions could have side effects, for example, when accessing a FIFO, use non-prefetchable read transactions to those locations. Accordingly, if it is important to retain the value of the byte enable bits during the data phase, use non-prefetchable read transactions. If these locations are mapped in memory space, use the memory read command and map the target into non-prefetchable (memory-mapped I/O) memory space to use non-prefetching behavior.

2.6.4 READ PREFETCH ADDRESS BOUNDARIES

The bridge imposes internal read address boundaries on read pre-fetched data. When a read transaction reaches one of these aligned address boundaries, the bridge stops pre-fetched data, unless the target signals a target disconnect before the read pre-fetched boundary is reached. When the bridge finishes transferring this read data to the initiator, it returns a target disconnect with the last data transfer, unless the initiator completes the transaction before all pre-fetched read data is delivered. Any leftover pre-fetched data is discarded.

Prefetchable read transactions in flow-through mode pre-fetch to the nearest aligned 4KB address boundary, or until the initiator de-asserts FRAME_L. Section 2.6.7 describes flow-through mode during read operations.

Table 2-4 shows the read prefetch address boundaries for read transactions during non-flow-through mode.

Table 2-4. Read Prefetch Address Boundaries

Type of Transaction	Address Space	Cache Line Size (CLS)	Prefetch Aligned Address Boundary
Configuration Read	-	*	One DWORD (no prefetch)
I/O Read	-	*	One DWORD (no prefetch)
Memory Read	Non-Prefetchable	*	One DWORD (no prefetch)
Memory Read	Prefetchable	CLS = 0 or 16	16-DWORD aligned address boundary
Memory Read	Prefetchable	CLS = 1, 2, 4, 8, 16	Cache line address boundary
Memory Read Line	-	CLS = 0 or 16	16-DWORD aligned address boundary
Memory Read Line	-	CLS = 1, 2, 4, 8, 16	Cache line boundary
Memory Read Multiple	-	CLS = 0 or 16	32-DWORD aligned address boundary
Memory Read Multiple	-	CLS = 1, 2, 4, 8, 16	2X of cache line boundary

- does not matter if it is prefetchable or non-prefetchable
* don't care

Table 2-5. Read Transaction Prefetching

Type of Transaction	Read Behavior
I/O Read	Prefetching never allowed
Configuration Read	Prefetching never allowed
Memory Read	Downstream: Prefetching used if address is prefetchable space
	Upstream: Prefetching used or programmable
Memory Read Line	Prefetching always used
Memory Read Multiple	Prefetching always used

See Section 3.3 for detailed information about prefetchable and non-prefetchable address spaces.

2.6.5 DELAYED READ REQUESTS

The bridge treats all read transactions as delayed read transactions, which means that the read request from the initiator is posted into a delayed transaction queue. Read data from the target is placed in the read data queue directed toward the initiator bus interface and is transferred to the initiator when the initiator repeats the read transaction.

When the bridge accepts a delayed read request, it first samples the read address, read bus command, and address parity. When IRDY# is asserted, the bridge then samples the byte enable bits for the first data phase. This information is entered into the delayed transaction queue. The bridge terminates the transaction by signaling a target retry to the initiator. Upon reception of the target retry, the initiator is

required to continue to repeat the same read transaction until at least one data transfer is completed, or until a target response (target abort or master abort) other than a target retry is received.

2.6.6 DELAYED READ COMPLETION WITH TARGET

When delayed read request reaches the head of the delayed transaction queue, the bridge arbitrates for the target bus and initiates the read transaction only if all previously queued posted write transactions have been delivered. The bridge uses the exact read address and read command captured from the initiator during the initial delayed read request to initiate the read transaction. If the read transaction is a non-prefetchable read, the bridge drives the captured byte enable bits during the next cycle. If the transaction is a prefetchable read transaction, it drives all byte enable bits to zero for all data phases. If the bridge receives a target retry in response to the read transaction on the target bus, it continues to repeat the read transaction until at least one data transfer is completed, or until an error condition is encountered. If the transaction is terminated via normal master termination or target disconnect after at least one data transfer has been completed, the bridge does not initiate any further attempts to read more data.

If the bridge is unable to obtain read data from the target after 2^{24} (default) or 2^{32} (maximum) attempts, the bridge will report system error. The number of attempts is programmable. The bridge also asserts P_SERR# if the primary SERR# enable bit is set in the command register. See Section 5.4 for information on the assertion of P_SERR#.

Once the bridge receives DEVSEL# and TRDY# from the target, it transfers the data read to the opposite direction read data queue, pointing toward the opposite inter-face, before terminating the transaction. For example, read data in response to a downstream read transaction initiated on the primary bus is placed in the upstream read data queue. The bridge can accept one DWORD of read data each PCI clock cycle; that is, no master wait states are inserted. The number of DWORD's transferred during a delayed read transaction depends on the conditions given in Table 2-4 (assuming no disconnect is received from the target).

2.6.7 DELAYED READ COMPLETION ON INITIATOR BUS

When the transaction has been completed on the target bus, and the delayed read data is at the head of the read data queue, and all ordering constraints with posted write transactions have been satisfied, the bridge transfers the data to the initiator when the initiator repeats the transaction. For memory read transactions, the bridge aliases the memory read, memory read line, and memory read multiple bus commands when matching the bus command of the transaction to the bus command in the delayed transaction queue. The bridge returns a target disconnect along with the transfer of the last DWORD of read data to the initiator. If the bridge initiator terminates the transaction before all read data has been transferred, the remaining read data left in data buffers is discarded.

When the master repeats the transaction and starts transferring prefetchable read data from data buffers while the read transaction on the target bus is still in progress and before a read boundary is reached on the target bus, the read transaction starts operating in flow-through mode. Because data is flowing through the data buffers from the target to the initiator, long read bursts can then be sustained. In this case, the read transaction is allowed to continue until the initiator terminates the transaction, or until an aligned 4KB address boundary is reached, or until the buffer fills, whichever comes first. When the buffer empties, the bridge reflects the stalled condition to the initiator by disconnecting the initiator with data. The initiator may retry the transaction later if data are needed. If the initiator does not need any more data, the initiator will not continue the disconnected transaction. In this case, the bridge will

start the master timeout timer. The remaining read data will be discarded after the master timeout timer expires. To provide better latency, if there are any other pending data for other transactions in the RDB (Read Data Buffer), the remaining read data will be discarded even though the master timeout timer has not expired.

The bridge implements a master timeout timer that starts counting when the delayed read completion is at the head of the delayed transaction queue, and the read data is at the head of the read data queue. The initial value of this timer is programmable through configuration register. If the initiator does not repeat the read transaction and before the master timeout timer expires (2^{15} default), the bridge discards the read transaction and read data from its queues. The bridge also conditionally asserts P_SERR# (see Section 5.4).

The bridge has the capability to post multiple delayed read requests, up to a maximum of four in each direction. If an initiator starts a read transaction that matches the address and read command of a read transaction that is already queued, the current read command is not posted as it is already contained in the delayed transaction queue.

See Section 4 for a discussion of how delayed read transactions are ordered when crossing the bridge.

2.6.8 FAST BACK-TO-BACK READ TRANSACTIONS

The bridge can recognize fast back-to-back read transactions.

2.7 CONFIGURATION TRANSACTIONS

Configuration transactions are used to initialize a PCI system. Every PCI device has a configuration space that is accessed by configuration commands. All registers are accessible in configuration space only.

In addition to accepting configuration transactions for initialization of its own configuration space, the bridge also forwards configuration transactions for device initialization in hierarchical PCI systems, as well as for special cycle generation.

To support hierarchical PCI bus systems, two types of configuration transactions are specified: Type 0 and Type 1.

Type 0 configuration transactions are issued when the intended target resides on the same PCI bus as the initiator. A Type 0 configuration transaction is identified by the configuration command and the lowest two bits of the address set to 00b.

Type 1 configuration transactions are issued when the intended target resides on another PCI bus, or when a special cycle is to be generated on another PCI bus. A Type 1 configuration command is identified by the configuration command and the lowest two address bits set to 01b.

The register number is found in both Type 0 and Type 1 formats and gives the DWORD address of the configuration register to be accessed. The function number is also included in both Type 0 and Type 1 formats and indicates which function of a multifunction device is to be accessed. For single-function devices, this value is not decoded. The addresses of Type 1 configuration transaction include a 5-bit field designating the device number that identifies the device on the target PCI bus that is to be

accessed. In addition, the bus number in Type 1 transactions specifies the PCI bus to which the transaction is targeted.

2.7.1 TYPE 0 ACCESS TO PI7C8140A

The configuration space is accessed by a Type 0 configuration transaction on the primary interface. The configuration space cannot be accessed from the secondary bus. The bridge responds to a Type 0 configuration transaction by asserting P_DEVSEL# when the following conditions are met during the address phase:

- The bus command is a configuration read or configuration write transaction.
- Lowest two address bits P_AD[1:0] must be 00b.
- Signal P_IDSEL must be asserted.

The bridge limits all configuration access to a single DWORD data transfer and returns target-disconnect with the first data transfer if additional data phases are requested. Because read transactions to configuration space do not have side effects, all bytes in the requested DWORD are returned, regardless of the value of the byte enable bits.

Type 0 configuration write and read transactions do not use data buffers; that is, these transactions are completed immediately, regardless of the state of the data buffers. The bridge ignores all Type 0 transactions initiated on the secondary interface.

2.7.2 TYPE 1 TO TYPE 0 CONVERSION

Type 1 configuration transactions are used specifically for device configuration in a hierarchical PCI bus system. A PCI-to-PCI bridge is the only type of device that should respond to a Type 1 configuration command. Type 1 configuration commands are used when the configuration access is intended for a PCI device that resides on a PCI bus other than the one where the Type 1 transaction is generated.

The bridge performs a Type 1 to Type 0 translation when the Type 1 transaction is generated on the primary bus and is intended for a device attached directly to the secondary bus. The bridge must convert the configuration command to a Type 0 format so that the secondary bus device can respond to it. Type 1 to Type 0 translations are performed only in the downstream direction; that is, the bridge generates a Type 0 transaction only on the secondary bus, and never on the primary bus.

The bridge responds to a Type 1 configuration transaction and translates it into a Type 0 transaction on the secondary bus when the following conditions are met during the address phase:

- The lowest two address bits on P_AD[1:0] are 01b.
- The bus number in address field P_AD[23:16] is equal to the value in the secondary bus number register in configuration space.
- The bus command on P_CBE[3:0] is a configuration read or configuration write transaction. When the bridge translates the Type 1 transaction to a Type 0 transaction on the secondary interface, it performs the following translations to the address:
- Sets the lowest two address bits on S_AD[1:0].
- Decodes the device number and drives the bit pattern specified in Table 2-6 on S_AD[31:16] for the purpose of asserting the device's IDSEL signal.
- Sets S_AD[15:11] to 0.

- Leaves unchanged the function number and register number fields.

The bridge asserts a unique address line based on the device number. These address lines may be used as secondary bus IDSEL signals. The mapping of the address lines depends on the device number in the Type 1 address bits P_AD[15:11]. presents the mapping that the bridge uses.

Table 2-6. Device Number to IDSEL S_AD Pin Mapping

Device Number	P_AD[15:11]	Secondary IDSEL S_AD[31:16]	S_AD
0h	00000	0000 0000 0000 0001	16
1h	00001	0000 0000 0000 0010	17
2h	00010	0000 0000 0000 0100	18
3h	00011	0000 0000 0000 1000	19
4h	00100	0000 0000 0001 0000	20
5h	00101	0000 0000 0010 0000	21
6h	00110	0000 0000 0100 0000	22
7h	00111	0000 0000 1000 0000	23
8h	01000	0000 0001 0000 0000	24
9h	01001	0000 0010 0000 0000	25
Ah	01010	0000 0100 0000 0000	26
Bh	01011	0000 1000 0000 0000	27
Ch	01100	0001 0000 0000 0000	28
Dh	01101	0010 0000 0000 0000	29
Eh	01110	0100 0000 0000 0000	30
Fh	01111	1000 0000 0000 0000	31
10h – 1Eh	10000 – 11110	0000 0000 0000 0000	-
1Fh	11111	Generate special cycle (P_AD[7:2] > 00h) 0000 0000 0000 0000 (P_AD[7:2] = 00h)	-

The bridge can assert up to 16 unique address lines to be used as IDSEL signals for up to 16 devices on the secondary bus, for device numbers ranging from 0 through 15. Because of electrical loading constraints of the PCI bus, more than 9 IDSEL signals should not be necessary. However, if device numbers greater than 15 are desired, some external method of generating IDSEL lines must be used, and no upper address bits are then asserted. The configuration transaction is still translated and passed from the primary bus to the secondary bus. If no IDSEL pin is asserted to a secondary device, the transaction ends in a master abort.

The bridge forwards Type 1 to Type 0 configuration read or write transactions as delayed transactions. Type 1 to Type 0 configuration read or write transactions are limited to a single 32-bit data transfer.

2.7.3 TYPE 1 TO TYPE 1 FORWARDING

Type 1 to Type 1 transaction forwarding provides a hierarchical configuration mechanism when two or more levels of PCI-to-PCI bridges are used.

When the bridge detects a Type 1 configuration transaction intended for a PCI bus downstream from the secondary bus, the bridge forwards the transaction unchanged to the secondary bus. Ultimately, this transaction is translated to a Type 0 configuration command or to a special cycle transaction by a downstream PCI-to-PCI bridge. Downstream Type 1 to Type 1 forwarding occurs when the following conditions are met during the address phase:

- The lowest two address bits are equal to 01b.
- The bus number falls in the range defined by the lower limit (exclusive) in the secondary bus number register and the upper limit (inclusive) in the subordinate bus number register.

- The bus command is a configuration read or write transaction.

The bridge also supports Type 1 to Type 1 forwarding of configuration write transactions upstream to support upstream special cycle generation. A Type 1 configuration command is forwarded upstream when the following conditions are met:

- The lowest two address bits are equal to 01b.
- The bus number falls outside the range defined by the lower limit (inclusive) in the secondary bus number register and the upper limit (inclusive) in the subordinate bus number register.
- The device number in address bits AD[15:11] is equal to 11111b.
- The function number in address bits AD[10:8] is equal to 111b.
- The bus command is a configuration write transaction.

The bridge forwards Type 1 to Type 1 configuration write transactions as delayed transactions. Type 1 to Type 1 configuration write transactions are limited to a single data transfer.

2.7.4 SPECIAL CYCLES

The Type 1 configuration mechanism is used to generate special cycle transactions in hierarchical PCI systems. Special cycle transactions are ignored by acting as a target and are not forwarded across the bridge. Special cycle transactions can be generated from Type 1 configuration write transactions in either the upstream or the down-stream direction.

The birdge initiates a special cycle on the target bus when a Type 1 configuration write transaction is being detected on the initiating bus and the following conditions are met during the address phase:

- The lowest two address bits on AD[1:0] are equal to 01b.
- The device number in address bits AD[15:11] is equal to 11111b.
- The function number in address bits AD[10:8] is equal to 111b.
- The register number in address bits AD[7:2] is equal to 000000b.
- The bus number is equal to the value in the secondary bus number register in configuration space for downstream forwarding or equal to the value in the primary bus number register in configuration space for upstream forwarding.
- The bus command on CBE# is a configuration write command.

When the bridge initiates the transaction on the target interface, the bus command is changed from configuration write to special cycle. The address and data are for-warded unchanged. Devices that use special cycles ignore the address and decode only the bus command. The data phase contains the special cycle message. The transaction is forwarded as a delayed transaction, but in this case the target response is not forwarded back (because special cycles result in a master abort). Once the transaction is completed on the target bus, through detection of the master abort condition, the bridge responds with TRDY# to the next attempt of the con-figuration transaction from the initiator. If more than one data transfer is requested, the bridge responds with a target disconnect operation during the first data phase.

2.8 TRANSACTION TERMINATION

This section describes how bridge returns transaction termination conditions back to the initiator.

The initiator can terminate transactions with one of the following types of termination:

- **Normal termination**
  Normal termination occurs when the initiator de-asserts FRAME# at the beginning of the last data phase, and de-asserts IRDY# at the end of the last data phase in conjunction with either TRDY# or STOP# assertion from the target.
- **Master abort**
  A master abort occurs when no target response is detected. When the initiator does not detect a DEVSEL# from the target within five clock cycles after asserting FRAME#, the initiator terminates the transaction with a master abort. If FRAME# is still asserted, the initiator de-asserts FRAME# on the next cycle, and then de-asserts IRDY# on the following cycle. IRDY# must be asserted in the same cycle in which FRAME# de-asserts. If FRAME# is already de-asserted, IRDY# can be de-asserted on the next clock cycle following detection of the master abort condition.

The target can terminate transactions with one of the following types of termination:

- **Normal termination**
  TRDY# and DEVSEL# asserted in conjunction with FRAME# de-asserted and IRDY# asserted.
- **Target retry**
  STOP# and DEVSEL# asserted with TRDY# de-asserted during the first data phase. No data transfers occur during the transaction. This transaction must be repeated.
- **Target disconnect with data transfer**
  STOP#, DEVSEL# and TRDY# asserted. It signals that this is the last data transfer of the transaction.
- **Target disconnect without data transfer**
  STOP# and DEVSEL# asserted with TRDY# de-asserted after previous data transfers have been made. Indicates that no more data transfers will be made during this transaction.
- **Target abort**
  STOP# asserted with DEVSEL# and TRDY# de-asserted. Indicates that target will never be able to complete this transaction. DEVSEL# must be asserted for at least one cycle during the transaction before the target abort is signaled.

2.8.1 MASTER TERMINATION INITIATED BY PI7C8140A

The bridge, as an initiator, uses normal termination if DEVSEL# is returned by target within five clock cycles of the bridge's assertion of FRAME# on the target bus. As an initiator, the bridge terminates a transaction when the following conditions are met:

- During a delayed write transaction, a single DWORD is delivered.
- During a non-prefetchable read transaction, a single DWORD is transferred from the target.
- During a prefetchable read transaction, a pre-fetch boundary is reached.
- For a posted write transaction, all write data for the transaction is transferred from data buffers to the target.
- For burst transfer, with the exception of "Memory Write and Invalidate" transactions, the master latency timer expires and the bridge's bus grant is de-asserted.
- The target terminates the transaction with a retry, disconnect, or target abort.

If the bridge is delivering posted write data when it terminates the transaction because the master latency timer expires, it initiates another transaction to deliver the remaining write data. The address of the transaction is updated to reflect the address of the current DWORD to be delivered.

If the bridge is pre-fetching read data when it terminates the transaction because the master latency timer expires, it does not repeat the transaction to obtain more data.

2.8.2 MASTER ABORT RECEIVED BY PI7C8140A

If the initiator initiates a transaction on the target bus and does not detect DEVSEL# returned by the target within five clock cycles of the assertion of FRAME#, the bridge terminates the transaction with a master abort. This sets the received-master-abort bit in the status register corresponding to the target bus.

For delayed read and write transactions, the bridge is able to reflect the master abort condition back to the initiator. When the bridge detects a master abort in response to a delayed transaction, and when the initiator repeats the transaction, the bridge does not respond to the transaction with DEVSEL#, which induces the master abort condition back to the initiator. The transaction is then removed from the delayed transaction queue. When a master abort is received in response to a posted write transaction, the bridge discards the posted write data and makes no more attempts to deliver the data. The bridge sets the received-master-abort bit in the status register when the master abort is received on the primary bus, or it sets the received master abort bit in the secondary status register when the master abort is received on the secondary interface. When master abort is detected in posted write transaction with both master-abort-mode bit (bit 5 of bridge control register) and the SERR# enable bit (bit 8 of command register for secondary bus) are set, the bridge asserts P_SERR# if the master-abort-on-posted-write is not set. The master-abort-on-posted-write bit is bit 4 of the P_SERR# event disable register (offset 64h).

Note: When the bridge performs a Type 1 to special cycle conversion, a master abort is the expected termination for the special cycle on the target bus. In this case, the master abort received bit is not set, and the Type 1 configuration transaction is disconnected after the first data phase.

2.8.3 TARGET TERMINATION RECEIVED BY PI7C8140A

When the bridge initiates a transaction on the target bus and the target responds with DEVSEL#, the target can end the transaction with one of the following types of termination:

- Normal termination (upon de-assertion of FRAME#)
- Target retry
- Target disconnect
- Target abort

The bridge handles these terminations in different ways, depending on the type of transaction being performed.

2.8.3.1 DELAYED WRITE TARGET TERMINATION RESPONSE

When the bridge initiates a delayed write transaction, the type of target termination received from the target can be passed back to the initiator. Table 2-7 shows the response to each type of target termination that occurs during a delayed write transaction.

The bridge repeats a delayed write transaction until one of the following conditions is met:

- Bridge completes at least one data transfer.
- Bridge receives a master abort.
- Bridge receives a target abort.

The bridge makes 2^{24} (default) or 2^{32} (maximum) write attempts resulting in a response of target retry.

Table 2-7. Delayed Write Target Termination Response

Target Termination	Response
Normal	Returning disconnect to initiator with first data transfer only if multiple data phases requested.
Target Retry	Returning target retry to initiator. Continue write attempts to target
Target Disconnect	Returning disconnect to initiator with first data transfer only if multiple data phases requested.
Target Abort	Returning target abort to initiator. Set received target abort bit in target interface status register. Set signaled target abort bit in initiator interface status register.

After the bridge makes 2^{24} (default) attempts of the same delayed write trans-action on the target bus, the bridge asserts P_SERR# if the SERR# enable bit (bit 8 of command register for the secondary bus) is set and the delayed-write-non-delivery bit is not set. The delayed-write-non-delivery bit is bit 5 of P_SERR# event disable register (offset 64h). The bridge will report system error. See Section 5.4 for a description of system error conditions.

2.8.3.2 POSTED WRITE TARGET TERMINATION RESPONSE

When the bridge initiates a posted write transaction, the target termination cannot be passed back to the initiator. Table 2-8 shows the response to each type of target termination that occurs during a posted write transaction.

Table 2-8. Response to Posted Write Target Termination

Target Termination	Repsonse
Normal	No additional action.
Target Retry	Repeating write transaction to target.
Target Disconnect	Initiate write transaction for delivering remaining posted write data.
Target Abort	Set received-target-abort bit in the target interface status register. Assert P_SERR# if enabled, and set the signaled-system-error bit in primary status register.

Note that when a target retry or target disconnect is returned and posted write data associated with that transaction remains in the write buffers, the bridge initiates another write transaction to attempt to deliver the rest of the write data. If there is a target retry, the exact same address will be driven as for the initial write trans-action attempt. If a target disconnect is received, the address that is driven on a subsequent write transaction attempt will be updated to reflect the address of the current DWORD. If the initial write transaction is Memory-Write-and-Invalidate transaction, and a partial delivery of write data to the target is performed before a target disconnect is received, the bridge will use the memory write command to deliver the rest of the write data. It is because an incomplete cache line will be transferred in the subsequent write transaction attempt.

After the bridge makes 2^{24} (default) write transaction attempts and fails to deliver all posted write data associated with that transaction, the bridge asserts P_SERR# if the primary SERR# enable bit is set (bit 8 of command register for secondary bus) and posted-write-non-delivery bit is not set. The posted-write-non-delivery bit is the bit 2 of P_SERR# event disable register (offset 64h). The bridge will report system error. See Section 5.4 for a discussion of system error conditions.

2.8.3.3 DELAYED READ TARGET TERMINATION RESPONSE

When the bridge initiates a delayed read transaction, the abnormal target responses can be passed back to the initiator. Other target responses depend on how much data the initiator requests. Table 2-9 shows the response to each type of target termination that occurs during a delayed read transaction.

The bridge repeats a delayed read transaction until one of the following conditions is met:

- Bridge completes at least one data transfer.
- Bridge receives a master abort.
- Bridge receives a target abort.

The bridge makes 2^{24} (default) read attempts resulting in a response of target retry.

Table 2-9. Response to Delayed Read Target Termination

Target Termination	Response
Normal	If prefetchable, target disconnect only if initiator requests more data than read from target. If non-prefetchable, target disconnect on first data phase.
Target Retry	Re-initiate read transaction to target
Target Disconnect	If initiator requests more data than read from target, return target disconnect to initiator.
Target Abort	Return target abort to initiator. Set received target abort bit in the target interface status register. Set signaled target abort bit in the initiator interface status register.

After the bridge makes 2^{24}(default) attempts of the same delayed read transaction on the target bus, the bridge asserts P_SERR# if the primary SERR# enable bit is set (bit 8 of command register for secondary bus) and the delayed-write-non-delivery bit is not set. The delayed-write-non-delivery bit is bit 5 of P_SERR# event disable register (offset 64h). The bridge will report system error. See Section 5.4 for a description of system error conditions.

2.8.4 TARGET TERMINATION INITIATED BY PI7C8140A

The bridge can return a target retry, target disconnect, or target abort to an initiator for reasons other than detection of that condition at the target interface.

2.8.4.1 TARGET RETRY

The bridge returns a target retry to the initiator when it cannot accept write data or return read data as a result of internal conditions. The bridge returns a target retry to an initiator when any of the following conditions is met:

For delayed write transactions:

- The transaction is being entered into the delayed transaction queue.
- Transaction has already been entered into delayed transaction queue, but target response has not yet been received.
- Target response has been received but has not progressed to the head of the return queue.
- The delayed transaction queue is full, and the transaction cannot be queued.
- A transaction with the same address and command has been queued.
- A locked sequence is being propagated across the bridge, and the write transaction is not a locked transaction.
- The target bus is locked and the write transaction is a locked transaction.

- Use more than 16 clocks to accept this transaction.

For delayed read transactions:

- The transaction is being entered into the delayed transaction queue.
- The read request has already been queued, but read data is not yet available.
- Data has been read from target, but it is not yet at head of the read data queue or a posted write transaction precedes it.
- The delayed transaction queue is full, and the transaction cannot be queued.
- A delayed read request with the same address and bus command has already been queued.
- A locked sequence is being propagated across the bridge, and the read transaction is not a locked transaction.
- The bridge is currently discarding previously pre-fetched read data.
- The target bus is locked and the write transaction is a locked transaction.
- Use more than 16 clocks to accept this transaction.

For posted write transactions:

- The posted write data buffer does not have enough space for address and at least one DWORD of write data.
- A locked sequence is being propagated across the bridge, and the write transaction is not a locked transaction.
- When a target retry is returned to the initiator of a delayed transaction, the initiator must repeat the transaction with the same address and bus command as well as the data if it is a write transaction, within the time frame specified by the master timeout value. Otherwise, the transaction is discarded from the buffers.

2.8.4.2 TARGET DISCONNECT

The bridge returns a target disconnect to an initiator when one of the following conditions is met:

- Bridge hits an internal address boundary.
- Bridge cannot accept any more write data.
- Bridge has no more read data to deliver.

See Section 2.5.4 for a description of write address boundaries, and Section 2.6.4 for a description of read address boundaries.

2.8.4.3 TARGET ABORT

The bridge returns a target abort to an initiator when one of the following conditions is met:

- The bridge is returning a target abort from the intended target.
- When the bridge returns a target abort to the initiator, it sets the signaled target abort bit in the status register corresponding to the initiator interface.

3 ADDRESS DECODING

The bridge uses three address ranges that control I/O and memory transaction forwarding. These address ranges are defined by base and limit address registers in the configuration space. This chapter describes these address ranges, as well as ISA-mode and VGA-addressing support.

3.1 ADDRESS RANGES

The bridge uses the following address ranges that determine which I/O and memory transactions are forwarded from the primary PCI bus to the secondary PCI bus, and from the secondary bus to the primary bus:

- Two 32-bit I/O address ranges
- Two 32-bit memory-mapped I/O (non-prefetchable memory) ranges
- Two 32-bit prefetchable memory address ranges

Transactions falling within these ranges are forwarded downstream from the primary PCI bus to the secondary PCI bus. Transactions falling outside these ranges are forwarded upstream from the secondary PCI bus to the primary PCI bus.

No address translation is required in the bridge. The addresses that are not marked for downstream are always forwarded upstream.

3.2 I/O ADDRESS DECODING

The bridge uses the following mechanisms that are defined in the configuration space to specify the I/O address space for downstream and upstream forwarding:

- I/O base and limit address registers
- The ISA enable bit
- The VGA mode bit
- The VGA snoop bit

This section provides information on the I/O address registers and ISA mode. Section 3.4 provides information on the VGA modes.

To enable downstream forwarding of I/O transactions, the I/O enable bit must be set in the command register in configuration space. All I/O transactions initiated on the primary bus will be ignored if the I/O enable bit is not set. To enable upstream forwarding of I/O transactions, the master enable bit must be set in the command register. If the master-enable bit is not set, the bridge ignores all I/O and memory transactions initiated on the secondary bus.

The master-enable bit also allows upstream forwarding of memory transactions if it is set.

CAUTION
If any configuration state affecting I/O transaction forwarding is changed by a configuration write operation on the primary bus at the same time that I/O transactions are ongoing on the secondary bus,

the bridge response to the secondary bus I/O transactions is not predictable. Configure the I/O base and limit address registers, ISA enable bit, VGA mode bit, and VGA snoop bit before setting I/O enable and master enable bits, and change them subsequently only when the primary and secondary PCI buses are idle.

3.2.1 I/O BASE AND LIMIT ADDRESS REGISTER

The bridge implements one set of I/O base and limit address registers in configuration space that define an I/O address range per port downstream forwarding. The bridge supports 32-bit I/O addressing, which allows I/O addresses downstream of the bridge to be mapped anywhere in a 4GB I/O address space.

I/O transactions with addresses that fall inside the range defined by the I/O base and limit registers are forwarded downstream from the primary PCI bus to the secondary PCI bus. I/O transactions with addresses that fall outside this range are forwarded upstream from the secondary PCI bus to the primary PCI bus.

The I/O range can be turned off by setting the I/O base address to a value greater than that of the I/O limit address. When the I/O range is turned off, all I/O trans-actions are forwarded upstream, and no I/O transactions are forwarded downstream. The I/O range has a minimum granularity of 4KB and is aligned on a 4KB boundary. The maximum I/O range is 4GB in size. The I/O base register consists of an 8-bit field at configuration address 1Ch, and a 16-bit field at address 30h. The top 4 bits of the 8-bit field define bits [15:12] of the I/O base address. The bottom 4 bits read only as 1h to indicate that the bridge supports 32-bit I/O addressing. Bits [11:0] of the base address are assumed to be 0, which naturally aligns the base address to a 4KB boundary. The 16 bits contained in the I/O base upper 16 bits register at configuration offset 30h define AD[31:16] of the I/O base address. All 16 bits are read/write. After primary bus reset or chip reset, the value of the I/O base address is initialized to 0000 0000h.

The I/O limit register consists of an 8-bit field at configuration offset 1Dh and a 16-bit field at offset 32h. The top 4 bits of the 8-bit field define bits [15:12] of the I/O limit address. The bottom 4 bits read only as 1h to indicate that 32-bit I/O addressing is supported. Bits [11:0] of the limit address are assumed to be FFFh, which naturally aligns the limit address to the top of a 4KB I/O address block. The 16 bits contained in the I/O limit upper 16 bits register at configuration offset 32h define AD[31:16] of the I/O limit address. All 16 bits are read/write. After primary bus reset or chip reset, the value of the I/O limit address is reset to 0000 0FFFh.

Note: The initial states of the I/O base and I/O limit address registers define an I/O range of 0000 0000h to 0000 0FFFh, which is the bottom 4KB of I/O space. Write these registers with their appropriate values before setting either the I/O enable bit or the master enable bit in the command register in configuration space.

3.2.2 ISA MODE

The bridge supports ISA mode by providing an ISA enable bit in the bridge control register in configuration space. ISA mode modifies the response of the bridge inside the I/O address range in order to support mapping of I/O space in the presence of an ISA bus in the system. This bit only affects the response of the bridge when the transaction falls inside the address range defined by the I/O base and limit address registers, and only when this address also falls inside the first 64KB of I/O space (address bits [31:16] are 0000h). When the ISA enable bit is set, the bridge does not forward downstream any I/O transactions addressing the top 768 bytes of each aligned 1KB block. Only those transactions addressing the bottom 256 bytes of an aligned 1KB block inside the base and limit I/O address range

are forwarded downstream. Transactions above the 64KB I/O address boundary are forwarded as defined by the address range defined by the I/O base and limit registers.

Accordingly, if the ISA enable bit is set, the bridge forwards upstream those I/O transactions addressing the top 768 bytes of each aligned 1KB block within the first 64KB of I/O space. The master enable bit in the command configuration register must also be set to enable upstream forwarding. All other I/O transactions initiated on the secondary bus are forwarded upstream only if they fall outside the I/O address range.

When the ISA enable bit is set, devices downstream of the bridge can have I/O space mapped into the first 256 bytes of each 1KB chunk below the 64KB boundary, or anywhere in I/O space above the 64KB boundary.

3.3 MEMORY ADDRESS DECODING

The bridge has three mechanisms for defining memory address ranges for forwarding of memory transactions:

- Memory-mapped I/O base and limit address registers
- Prefetchable memory base and limit address registers
- VGA mode

This section describes the first two mechanisms. Section 3.4.1 describes VGA mode. To enable downstream forwarding of memory transactions, the memory enable bit must be set in the command register in configuration space. To enable upstream forwarding of memory transactions, the master-enable bit must be set in the command register. The master-enable bit also allows upstream forwarding of I/O transactions if it is set.

CAUTION
If any configuration state affecting memory transaction forwarding is changed by a configuration write operation on the primary bus at the same time that memory transactions are ongoing on the secondary bus, response to the secondary bus memory transactions is not predictable. Configure the memory-mapped I/O base and limit address registers, prefetchable memory base and limit address registers, and VGA mode bit before setting the memory enable and master enable bits, and change them subsequently only when the primary and secondary PCI buses are idle.

3.3.1 MEMORY-MAPPED I/O BASE AND LIMIT ADDRESS REGISTERS

Memory-mapped I/O is also referred to as non-prefetchable memory. Memory addresses that cannot automatically be pre-fetched but that can be conditionally pre-fetched based on command type should be mapped into this space. Read transactions to non-prefetchable space may exhibit side effects; this space may have non-memory-like behavior. The bridge prefetches in this space only if the memory read line or memory read multiple commands are used; transactions using the memory read command are limited to a single data transfer.

The memory-mapped I/O base address and memory-mapped I/O limit address registers define an address range that the bridge uses to determine when to forward memory commands. The bridge forwards a memory transaction from the primary to the secondary interface if the transaction address falls within the memory-mapped I/O address range. The bridge ignores memory transactions initiated

on the secondary interface that fall into this address range. Any transactions that fall outside this address range are ignored on the primary interface and are forwarded upstream from the secondary interface (provided that they do not fall into the prefetchable memory range or are not forwarded downstream by the VGA mechanism).

The memory-mapped I/O range supports 32-bit addressing only. The PCI-to-PCI Bridge Architecture Specification does not provide for 64-bit addressing in the memory-mapped I/O space. The memory-mapped I/O address range has a granularity and alignment of 1MB. The maximum memory-mapped I/O address range is 4GB.

The memory-mapped I/O address range is defined by a 16-bit memory-mapped I/O base address register at configuration offset 20h and by a 16-bit memory-mapped I/O limit address register at offset 22h. The top 12 bits of each of these registers correspond to bits [31:20] of the memory address. The low 4 bits are hardwired to 0. The lowest 20 bits of the memory-mapped I/O base address are assumed to be 0 0000h, which results in a natural alignment to a 1MB boundary. The lowest 20 bits of the memory-mapped I/O limit address are assumed to be FFFFFh, which results in an alignment to the top of a 1MB block.

Note: The initial state of the memory-mapped I/O base address register is 0000 0000h. The initial state of the memory-mapped I/O limit address register is 000F FFFFh. Note that the initial states of these registers define a memory-mapped I/O range at the bottom 1MB block of memory. Write these registers with their appropriate values before setting either the memory enable bit or the master enable bit in the command register in configuration space. To turn off the memory-mapped I/O address range, write the memory-mapped I/O base address register with a value greater than that of the memory-mapped I/O limit address register.

3.3.2 PREFETCHABLE MEMORY BASE AND LIMIT ADDRESS REGISTERS

Locations accessed in the prefetchable memory address range must have true memory-like behavior and must not exhibit side effects when read. This means that extra reads to a prefetchable memory location must have no side effects. The bridge prefetches for all types of memory read commands in this address space.

The prefetchable memory base address and prefetchable memory limit address registers define an address range that the bridge uses to determine when to forward memory commands. The bridge forwards a memory transaction from the primary to the secondary interface if the transaction address falls within the prefetchable memory address range. The bridge ignores memory transactions initiated on the secondary interface that fall into this address range. The bridge does not respond to any transactions that fall outside this address range on the primary interface and forwards those transactions upstream from the secondary interface (provided that they do not fall into the memory-mapped I/O range or are not forwarded by the VGA mechanism).

The prefetchable memory range supports 64-bit addressing and provides additional registers to define the upper 32 bits of the memory address range, the prefetchable memory base address upper 32 bits register, and the prefetchable memory limit address upper 32 bits register. For address comparison, a single address cycle (32-bit address) prefetchable memory transaction is treated like a 64-bit address transaction where the upper 32 bits of the address are equal to 0. This upper 32-bit value of 0 is compared to the prefetchable memory base address upper 32 bits register and the prefetchable memory limit address upper 32 bits register. The prefetchable memory base address upper 32 bits register must be 0 to pass any single address cycle transactions downstream.

Prefetchable memory address range has a granularity and alignment of 1MB. Maximum memory address range is 4GB when 32-bit addressing is being used. Prefetchable memory address range is defined by a 16-bit prefetchable memory base address register at configuration offset 24h and by a 16-bit prefetchable memory limit address register at offset 26h. The top 12 bits of each of these registers correspond to bits [31:20] of the memory address. The lowest 4 bits are hardwired to 1h. The lowest 20 bits of the prefetchable memory base address are assumed to be 0 0000h, which results in a natural alignment to a 1MB boundary. The lowest 20 bits of the prefetchable memory limit address are assumed to be FFFFFh, which results in an alignment to the top of a 1MB block.

Note: The initial state of the prefetchable memory base address register is 0000 0000h. The initial state of the prefetchable memory limit address register is 000F FFFFh. Note that the initial states of these registers define a prefetchable memory range at the bottom 1MB block of memory. Write these registers with their appropriate values before setting either the memory enable bit or the master enable bit in the command register in configuration space.

To turn off the prefetchable memory address range, write the prefetchable memory base address register with a value greater than that of the prefetchable memory limit address register. The entire base value must be greater than the entire limit value, meaning that the upper 32 bits must be considered. Therefore, to disable the address range, the upper 32 bits registers can both be set to the same value, while the lower base register is set greater than the lower limit register. Otherwise, the upper 32-bit base must be greater than the upper 32-bit limit.

3.4 VGA SUPPORT

The bridge provides two modes for VGA support:

- VGA mode, supporting VGA-compatible addressing
- VGA snoop mode, supporting VGA palette forwarding

3.4.1 VGA MODE

When a VGA-compatible device exists downstream from the bridge, set the VGA mode bit in the bridge control register in configuration space to enable VGA mode. When the bridge is operating in VGA mode, it forwards downstream those transactions addressing the VGA frame buffer memory and VGA I/O registers, regardless of the values of the base and limit address registers. The bridge ignores transactions initiated on the secondary interface addressing these locations.

The VGA frame buffer consists of the following memory address range:

000A 0000h–000B FFFFh

Read transactions to frame buffer memory are treated as non-prefetchable. The bridge requests only a single data transfer from the target, and read byte enable bits are forwarded to the target bus.

The VGA I/O addresses are in the range of 3B0h–3BBh and 3C0h–3DFh I/O. These I/O addresses are aliases every 1KB throughout the first 64KB of I/O space. This means that address bits <15:10> are not decoded and can be any value, while address bits [31:16] must be all 0's. VGA BIOS addresses starting at C0000h are not decoded in VGA mode.

3.4.2 VGA SNOOP MODE

The bridge provides VGA snoop mode, allowing for VGA palette write transactions to be forwarded downstream. This mode is used when a graphics device downstream from the bridge needs to snoop or respond to VGA palette write transactions. To enable the mode, set the VGA snoop bit in the command register in configuration space. Note that the bridge claims VGA palette write transactions by asserting DEVSEL# in VGA snoop mode.

When VGA snoop bit is set, the bridge forwards downstream transactions within the 3C6h, 3C8h and 3C9h I/O addresses space. Note that these addresses are also forwarded as part of the VGA compatibility mode previously described. Again, address bits <15:10> are not decoded, while address bits <31:16> must be equal to 0, which means that these addresses are aliases every 1KB throughout the first 64KB of I/O space.

Note: If both the VGA mode bit and the VGA snoop bit are set, the bridge behaves in the same way as if only the VGA mode bit were set.

4 TRANSACTION ORDERING

To maintain data coherency and consistency, the bridge complies with the ordering rules set forth in the PCI Local Bus Specification, Revision 2.2, for transactions crossing the bridge. This chapter describes the ordering rules that control transaction forwarding across the bridge.

4.1 TRANSACTIONS GOVERNED BY ORDERING RULES

Ordering relationships are established for the following classes of transactions crossing the bridge:

Posted write transactions, comprised of memory write and memory write and invalidate transactions.
Posted write transactions complete at the source before they complete at the destination; that is, data is written into intermediate data buffers before it reaches the target.

Delayed write request transactions, comprised of I/O write and configuration write transactions.
Delayed write requests are terminated by target retry on the initiator bus and are queued in the delayed transaction queue. A delayed write transaction must complete on the target bus before it completes on the initiator bus.

Delayed write completion transactions, comprised of I/O write and configuration write transactions.
Delayed write completion transactions complete on the target bus, and the target response is queued in the buffers. A delayed write completion transaction proceeds in the direction opposite that of the original delayed write request; that is, a delayed write completion transaction proceeds from the target bus to the initiator bus.

Delayed read request transactions, comprised of all memory read, I/O read, and configuration read transactions.
Delayed read requests are terminated by target retry on the initiator bus and are queued in the delayed transaction queue.

Delayed read completion transactions, comprised of all memory read, I/O read, & configuration read transactions.
Delayed read completion transactions complete on the target bus, and the read data is queued in the read data buffers. A delayed read completion transaction proceeds in the direction opposite that of the original delayed read request; that is, a delayed read completion transaction proceeds from the target bus to the initiator bus.

The bridge does not combine or merge write transactions:

- The bridge does not combine separate write transactions into a single write transaction—this optimization is best implemented in the originating master.
- The bridge does not merge bytes on separate masked write transactions to the same DWORD address—this optimization is also best implemented in the originating master.
- The bridge does not collapse sequential write transactions to the same address into a single write transaction—the PCI Local Bus Specification does not permit this combining of transactions.

4.2 GENERAL ORDERING GUIDELINES

Independent transactions on primary and secondary buses have a relationship only when those transactions cross the bridge.

The following general ordering guidelines govern transactions crossing the bridge:

- The ordering relationship of a transaction with respect to other transactions is determined when the transaction completes, that is, when a transaction ends with a termination other than target retry.

- Requests terminated with target retry can be accepted and completed in any order with respect to other transactions that have been terminated with target retry. If the order of completion of delayed requests is important, the initiator should not start a second delayed transaction until the first one has been completed. If more than one delayed transaction is initiated, the initiator should repeat all delayed transaction requests, using some fairness algorithm. Repeating a delayed transaction cannot be contingent on completion of another delayed transaction. Otherwise, a deadlock can occur.

- Write transactions flowing in one direction have no ordering requirements with respect to write transactions flowing in the other direction. The bridge can accept posted write transactions on both interfaces at the same time, as well as initiate posted write transactions on both interfaces at the same time.

- The acceptance of a posted memory write transaction as a target can never be contingent on the completion of a non-locked, non-posted transaction as a master. This is true for the bridge and must also be true for other bus agents. Otherwise, a deadlock can occur.

- The bridge accepts posted write transactions, regardless of the state of completion of any delayed transactions being forwarded across the bridge.

4.3 ORDERING RULES

Table 4-1 shows the ordering relationships of all the transactions and refers by number to the ordering rules that follow.

Table 4-1. Summary of Transaction Ordering

Pass	Posted Write	Delayed Read Request	Delayed Write Request	Delayed Read Completion	Delayed Write Completion
Posted Write	No[1]	Yes[5]	Yes[5]	Yes[5]	Yes[5]
Delayed Read Request	No[2]	Yes	Yes	Yes	Yes
Delayed Write Request	No[4]	Yes	Yes	Yes	Yes
Delayed Read Completion	No[3]	Yes	Yes	Yes	Yes
Delayed Write Completion	Yes	Yes	Yes	Yes	Yes

Note: The superscript accompanying some of the table entries refers to any applicable ordering rule listed in this section. Many entries are not governed by these ordering rules; therefore, the implementation can choose whether or not the transactions pass each other.

The entries without superscripts reflect the bridge's implementation choices.

The following ordering rules describe the transaction relationships. Each ordering rule is followed by an explanation, and the ordering rules are referred to by number in Table 4-1. These ordering rules apply to posted write transactions, delayed write and read requests, and delayed write and read completion transactions crossing the bridge in the same direction. Note that delayed completion transactions cross the bridge in the direction opposite that of the corresponding delayed requests.

1. Posted write transactions must complete on the target bus in the order in which they were received on the initiator bus. The subsequent posted write transaction can be setting a flag that covers the data in the first posted write transaction; if the second transaction were to complete before the first transaction, a device checking the flag could subsequently consume stale data.

2. A delayed read request traveling in the same direction as a previously queued posted write transaction must push the posted write data ahead of it. The posted write transaction must complete on the target bus before the delayed read request can be attempted on the target bus. The read transaction can be to the same location as the write data, so if the read transaction were to pass the write transaction, it would return stale data.

3. A delayed read completion must ''pull'' ahead of previously queued posted write data traveling in the same direction. In this case, the read data is traveling in the same direction as the write data, and the initiator of the read transaction is on the same side of the bridge as the target of the write transaction. The posted write transaction must complete to the target before the read data is returned to the initiator. The read transaction can be a reading to a status register of the initiator of the posted write data and therefore should not complete until the write transaction is complete.

4. Delayed write requests cannot pass previously queued posted write data. For posted memory write transactions, the delayed write transaction can set a flag that covers the data in the posted write transaction. If the delayed write request were to complete before the earlier posted write transaction, a device checking the flag could subsequently consume stale data.

5. Posted write transactions must be given opportunities to pass delayed read and write requests and completions. Otherwise, deadlocks may occur when some bridges which support delayed transactions and other bridges which do not support delayed transactions are being used in the same system. A fairness algorithm is used to arbitrate between the posted write queue and the delayed transaction queue.

4.4 DATA SYNCHRONIZATION

Data synchronization refers to the relationship between interrupt signaling and data delivery. The *PCI Local Bus Specification*, Revision 2.2, provides the following alternative methods for synchronizing data and interrupts:

- The device signaling the interrupt performs a read of the data just written (software).
- The device driver performs a read operation to any register in the interrupting device before accessing data written by the device (software).
- System hardware guarantees that write buffers are flushed before interrupts are forwarded.

The bridge does not have a hardware mechanism to guarantee data synchronization for posted write transactions. Therefore, all posted write transactions must be followed by a read operation, either from the device to the location just written (or some other location along the same path), or from the device driver to one of the device registers.

5 ERROR HANDLING

The bridge checks, forwards, and generates parity on both the primary and secondary interfaces. To maintain transparency, the bridge always tries to forward the existing parity condition on one bus to the other bus, along with address and data. The bridge always attempts to be transparent when reporting errors, but this is not always possible, given the presence of posted data and delayed transactions.

To support error reporting on the PCI bus, the bridge implements the following:

- PERR# and SERR# signals on both the primary and secondary interfaces
- Primary status and secondary status registers
- The device-specific P_SERR# event disable register

This chapter provides detailed information about how the bridge handles errors. It also describes error status reporting and error operation disabling.

5.1 ADDRESS PARITY ERRORS

The bridge checks address parity for all transactions on both buses, for all address and all bus commands. When the bridge detects an address parity error on the primary interface, the following events occur:

- If the parity error response bit is set in the command register, the bridge does not claim the transaction with P_DEVSEL#; this may allow the transaction to terminate in a master abort. If parity error response bit is not set, the bridge proceeds normally and accepts the transaction if it is directed to or across the bridge.
- The bridge sets the detected parity error bit in the status register.
- The bridge asserts P_SERR# and sets signaled system error bit in the status register, if both the following conditions are met:
- The SERR# enable bit is set in the command register.
- The parity error response bit is set in the command register.

When the bridge detects an address parity error on the secondary interface, the following events occur:

- If the parity error response bit is set in the bridge control register, the bridge does not claim the transaction with S_DEVSEL#; this may allow the transaction to terminate in a master abort. If parity error response bit is not set, the bridge proceeds normally and accepts transaction if it is directed to or across the bridge.
- The bridge sets the detected parity error bit in the secondary status register.
- The bridge asserts P_SERR# and sets signaled system error bit in status register, if both of the following conditions are met:
- The SERR# enable bit is set in the command register.
- The parity error response bit is set in the bridge control register.

5.2 DATA PARITY ERRORS

When forwarding transactions, the bridge attempts to pass the data parity condition from one interface to the other unchanged, whenever possible, to allow the master and target devices to handle the error condition.

The following sections describe, for each type of transaction, the sequence of events that occurs when a parity error is detected and the way in which the parity condition is forwarded across the bridge.

5.2.1 CONFIGURATION WRITE TRANSACTIONS TO CONFIGURATION SPACE

When the bridge detects a data parity error during a Type 0 configuration write transaction to the bridge configuration space, the following events occur:

If the parity error response bit is set in the command register, the bridge asserts P_TRDY# and writes the data to the configuration register. The bridge also asserts P_PERR#. If the parity error response bit is not set, the bridge does not assert P_PERR#.

The bridge sets the detected parity error bit in the status register, regardless of the state of the parity error response bit.

5.2.2 READ TRANSACTIONS

When the bridge detects a parity error during a read transaction, the target drives data and data parity, and the initiator checks parity and conditionally asserts PERR#. For downstream transactions, when the bridge detects a read data parity error on the secondary bus, the following events occur:

- Bridge asserts S_PERR# two cycles following the data transfer, if the secondary interface parity error response bit is set in the bridge control register.
- Bridge sets the detected parity error bit in the secondary status register.
- Bridge sets the data parity detected bit in the secondary status register, if the secondary interface parity error response bit is set in the bridge control register.
- Bridge forwards the bad parity with the data back to the initiator on the primary bus. If the data with the bad parity is pre-fetched and is not read by the initiator on the primary bus, the data is discarded and the data with bad parity is not returned to the initiator.

- Bridge completes the transaction normally.

For upstream transactions, when the bridge detects a read data parity error on the primary bus, the following events occur:

- Bridge asserts P_PERR# two cycles following the data transfer, if the primary interface parity error response bit is set in the command register.
- Bridge sets the detected parity error bit in the primary status register.
- Bridge sets the data parity detected bit in the primary status register, if the primary interface parity-error-response bit is set in the command register.
- Bridge forwards the bad parity with the data back to the initiator on the secondary bus. If the data with the bad parity is pre-fetched and is not read by the initiator on the secondary bus, the data is discarded and the data with bad parity is not returned to the initiator.
- Bridge completes the transaction normally.

The bridge returns to the initiator the data and parity that was received from the target. When the initiator detects a parity error on this read data and is enabled to report it, the initiator asserts PERR# two cycles after the data transfer occurs. It is assumed that the initiator takes responsibility for handling a parity error condition; therefore, when the bridge detects PERR# asserted while returning read data to the initiator, the bridge does not take any further action and completes the transaction normally.

5.2.3 DELAYED WRITE TRANSACTIONS

When the bridge detects a data parity error during a delayed write transaction, the initiator drives data and data parity, and the target checks parity and conditionally asserts PERR#.

For delayed write transactions, a parity error can occur at the following times:

- During the original delayed write request transaction
- When the initiator repeats the delayed write request transaction
- When the bridge completes the delayed write transaction to the target

When a delayed write transaction is normally queued, the address, command, address parity, data, byte enable bits, and data parity are all captured and a target retry is returned to the initiator. When the bridge detects a parity error on the write data for the initial delayed write request transaction, the following events occur:

- If the parity-error-response bit corresponding to the initiator bus is set, the bridge asserts TRDY# to the initiator and the transaction is not queued. If multiple data phases are requested, STOP# is also asserted to cause a target disconnect. Two cycles after the data transfer, the bridge also asserts PERR#.
- If the parity-error-response bit is not set, the bridge returns a target retry. It queues the transaction as usual. The bridge does not assert PERR#. In this case, the initiator repeats the transaction.
- The bridge sets the detected-parity-error bit in the status register corresponding to the initiator bus, regardless of the state of the parity-error-response bit.

Note: If parity checking is turned off and data parity errors have occurred for queued or subsequent delayed write transactions on the initiator bus, it is possible that the initiator's re-attempts of the write transaction may not match the original queued delayed write information contained in the delayed transaction queue. In this case, a master timeout condition may occur, possibly resulting in a system error (P_SERR# assertion).

For downstream transactions, when the bridge is delivering data to the target on the secondary bus and S_PERR# is asserted by the target, the following events occur:

- The bridge sets the secondary interface data parity detected bit in the secondary status register, if the secondary parity error response bit is set in the bridge control register.
- The bridge captures the parity error condition to forward it back to the initiator on the primary bus.

Similarly, for upstream transactions, when the bridge is delivering data to the target on the primary bus and P_PERR# is asserted by the target, the following events occur:

- The bridge sets the primary interface data-parity-detected bit in the status register, if the primary parity-error-response bit is set in the command register.

- The bridge captures the parity error condition to forward it back to the initiator on the secondary bus.

A delayed write transaction is completed on the initiator bus when the initiator repeats the write transaction with the same address, command, data, and byte enable bits as the delayed write command that is at the head of the posted data queue. Note that the parity bit is not compared when determining whether the transaction matches those in the delayed transaction queues.

Two cases must be considered:

- When parity error is detected on the initiator bus on a subsequent re-attempt of the transaction and was not detected on the target bus
- When parity error is forwarded back from the target bus

For downstream delayed write transactions, when the parity error is detected on the initiator bus and the bridge has write status to return, the following events occur:

- Bridge first asserts P_TRDY# and then asserts P_PERR# two cycles later, if the primary interface parity-error-response bit is set in the command register.
- Bridge sets the primary interface parity-error-detected bit in the status register.
- Because there was not an exact data and parity match, the write status is not returned and the transaction remains in the queue.

Similarly, for upstream delayed write transactions, when the parity error is detected on the initiator bus and the bridge has write status to return, the following events occur:

- Bridge first asserts S_TRDY# and then asserts S_PERR# two cycles later, if the secondary interface parity-error-response bit is set in the bridge control register (offset 3Ch).
- Bridge sets the secondary interface parity-error-detected bit in the secondary status register.
- Because there was not an exact data and parity match, the write status is not returned and the transaction remains in the queue.

For downstream transactions, where the parity error is being passed back from the target bus and the parity error condition was not originally detected on the initiator bus, the following events occur:

- Bridge asserts P_PERR# two cycles after the data transfer, if the following are both true:
- The parity-error-response bit is set in the command register of the primary interface.
- The parity-error-response bit is set in the bridge control register of the secondary interface.
- Bridge completes the transaction normally.

For upstream transactions, when the parity error is being passed back from the target bus and the parity error condition was not originally detected on the initiator bus, the following events occur:

- Bridge asserts S_PERR# two cycles after the data transfer, if the following are both true:
- The parity error response bit is set in the command register of the primary interface.
- The parity error response bit is set in the bridge control register of the secondary interface.
- Bridge completes the transaction normally.

5.2.4 POSTED WRITE TRANSACTIONS

During downstream posted write transactions, when the bridge responds as a target, it detects a data parity error on the initiator (primary) bus and the following events occur:

- Bridge asserts P_PERR# two cycles after the data transfer, if the parity error response bit is set in the command register of primary interface.
- Bridge sets the parity error detected bit in the status register of the primary interface.
- Bridge captures and forwards the bad parity condition to the secondary bus.
- Bridge completes the transaction normally.

Similarly, during upstream posted write transactions, when the bridge responds as a target, it detects a data parity error on the initiator (secondary) bus, the following events occur:

- Bridge asserts S_PERR# two cycles after the data transfer, if the parity error response bit is set in the bridge control register of the secondary interface.
- Bridge sets the parity error detected bit in the status register of the secondary interface.
- Bridge captures and forwards the bad parity condition to the primary bus.
- Bridge completes the transaction normally.

During downstream write transactions, when a data parity error is reported on the target (secondary) bus by the target's assertion of S_PERR#, the following events occur:

- Bridge sets the data parity detected bit in the status register of secondary interface, if the parity error response bit is set in the bridge control register of the secondary interface.
- Bridge asserts P_SERR# and sets the signaled system error bit in the status register, if all the following conditions are met:
    - The SERR# enable bit is set in the command register.
    - The posted write parity error bit of P_SERR# event disable register is not set.
    - The parity error response bit is set in the bridge control register of the secondary interface.
    - The parity error response bit is set in the command register of the primary interface.
    - Bridge has not detected the parity error on the primary (initiator) bus which the parity error is not forwarded from the primary bus to the secondary bus.

During upstream write transactions, when a data parity error is reported on the target (primary) bus by the target's assertion of P_PERR#, the following events occur:

- Bridge sets the data parity detected bit in the status register, if the parity error response bit is set in the command register of the primary interface.
- Bridge asserts P_SERR# and sets the signaled system error bit in the status register, if all the following conditions are met:

- The SERR# enable bit is set in the command register.
- The parity error response bit is set in the bridge control register of the secondary interface.
- The parity error response bit is set in the command register of the primary interface.
- Bridge has not detected the parity error on the secondary (initiator) bus, which the parity error is not forwarded from the secondary bus to the primary bus.

Assertion of P_SERR# is used to signal the parity error condition when the initiator does not know that the error occurred. Because the data has already been delivered with no errors, there is no other way to signal this information back to the initiator. If the parity error has forwarded from the initiating bus to the target bus, P_SERR# will not be asserted.

5.3 DATA PARITY ERROR REPORTING SUMMARY

In the previous sections, the responses of the bridge to data parity errors are presented according to the type of transaction in progress. This section organizes the responses of the bridge to data parity errors according to the status bits that the bridge sets and the signals that it asserts. Table 5-1 shows setting the detected parity error bit in the status register, corresponding to the primary interface. This bit is set when the bridge detects a parity error on the primary interface.

Table 5-1. Setting the Primary Interface Detected Parity Error Bit

Primary Detected Parity Error Bit	Transaction Type	Direction	Bus Where Error Was Detected	Primary/ Secondary Parity Error Response Bits
0	Read	Downstream	Primary	x / x
0	Read	Downstream	Secondary	x / x
1	Read	Upstream	Primary	x / x
0	Read	Upstream	Secondary	x / x
1	Posted Write	Downstream	Primary	x / x
0	Posted Write	Downstream	Secondary	x / x
0	Posted Write	Upstream	Primary	x / x
0	Posted Write	Upstream	Secondary	x / x
1	Delayed Write	Downstream	Primary	x / x
0	Delayed Write	Downstream	Secondary	x / x
0	Delayed Write	Upstream	Primary	x / x
0	Delayed Write	Upstream	Secondary	x / x

X = don't care

Table 5-2 shows setting the detected parity error bit in the secondary status register, corresponding to the secondary interface. This bit is set when the bridge detects a parity error on the secondary interface.

Table 5-2. Setting Secondary Interface Detected Parity Error Bit

Secondary Detected Parity Error Bit	Transaction Type	Direction	Bus Where Error Was Detected	Primary/ Secondary Parity Error Response Bits
0	Read	Downstream	Primary	x / x
1	Read	Downstream	Secondary	x / x
0	Read	Upstream	Primary	x / x
0	Read	Upstream	Secondary	x / x
0	Posted Write	Downstream	Primary	x / x
0	Posted Write	Downstream	Secondary	x / x
0	Posted Write	Upstream	Primary	x / x
1	Posted Write	Upstream	Secondary	x / x
0	Delayed Write	Downstream	Primary	x / x

Secondary Detected Parity Error Bit	Transaction Type	Direction	Bus Where Error Was Detected	Primary/ Secondary Parity Error Response Bits
0	Delayed Write	Downstream	Secondary	x / x
0	Delayed Write	Upstream	Primary	x / x
1	Delayed Write	Upstream	Secondary	x / x

X = don't care

Table 5-3 shows setting data parity detected bit in the primary interface's status register. This bit is set under the following conditions:

- Bridge must be a master on the primary bus.
- The parity error response bit in the command register, corresponding to the primary interface, must be set.
- The P_PERR# signal is detected asserted or a parity error is detected on the primary bus.

Table 5-3. Setting Primary Interface Master Data Parity Error Detected Bit

Primary Data Parity Bit	Transaction Type	Direction	Bus Where Error Was Detected	Primary / Secondary Parity Error Response Bits
0	Read	Downstream	Primary	x / x
0	Read	Downstream	Secondary	x / x
1	Read	Upstream	Primary	1 / x
0	Read	Upstream	Secondary	x / x
0	Posted Write	Downstream	Primary	x / x
0	Posted Write	Downstream	Secondary	x / x
1	Posted Write	Upstream	Primary	1 / x
0	Posted Write	Upstream	Secondary	x / x
0	Delayed Write	Downstream	Primary	x / x
0	Delayed Write	Downstream	Secondary	x / x
1	Delayed Write	Upstream	Primary	1 / x
0	Delayed Write	Upstream	Secondary	x / x

X = don't care

Table 5-4 shows setting the data parity detected bit in the status register of secondary interface. This bit is set under the following conditions:

- The bridge must be a master on the secondary bus.
- The parity error response bit must be set in the bridge control register of secondary interface.
- The S_PERR# signal is detected asserted or a parity error is detected on the secondary bus.

Table 5-4. Setting Secondary Interface Master Data Parity Error Detected Bit

Secondary Detected Parity Detected Bit	Transaction Type	Direction	Bus Where Error Was Detected	Primary / Secondary Parity Error Response Bits
0	Read	Downstream	Primary	x / x
1	Read	Downstream	Secondary	x / 1
0	Read	Upstream	Primary	x / x
0	Read	Upstream	Secondary	x / x
0	Posted Write	Downstream	Primary	x / x
1	Posted Write	Downstream	Secondary	x / 1
0	Posted Write	Upstream	Primary	x / x
0	Posted Write	Upstream	Secondary	x / x
0	Delayed Write	Downstream	Primary	x / x
1	Delayed Write	Downstream	Secondary	x / 1
0	Delayed Write	Upstream	Primary	x / x
0	Delayed Write	Upstream	Secondary	x / x

X= don't care

Table 5-5 shows assertion of P_PERR#. This signal is set under the following conditions:

- The bridge is either the target of a write transaction or the initiator of a read transaction on the primary bus.
- The parity-error-response bit must be set in the command register of primary interface.
- The bridge detects a data parity error on the primary bus or detects S_PERR# asserted during the completion phase of a downstream delayed write transaction on the target (secondary) bus.

Table 5-5. Assertion of P_PERR#

P_PERR#	Transaction Type	Direction	Bus Where Error Was Detected	Primary/ Secondary Parity Error Response Bits
1 (de-asserted)	Read	Downstream	Primary	x / x
1	Read	Downstream	Secondary	x / x
0 (asserted)	Read	Upstream	Primary	1 / x
1	Read	Upstream	Secondary	x / x
0	Posted Write	Downstream	Primary	1 / x
1	Posted Write	Downstream	Secondary	x / x
1	Posted Write	Upstream	Primary	x / x
1	Posted Write	Upstream	Secondary	x / x
0	Delayed Write	Downstream	Primary	1 / x
0[2]	Delayed Write	Downstream	Secondary	1 / 1
1	Delayed Write	Upstream	Primary	x / x
1	Delayed Write	Upstream	Secondary	x / x

X = don't care
[2]The parity error was detected on the target (secondary) bus but not on the initiator (primary) bus.

Table 5-6 shows assertion of S_PERR# that is set under the following conditions:

- The bridge is either the target of a write transaction or the initiator of a read transaction on the secondary bus.
- The parity error response bit must be set in the bridge control register of secondary interface.
- Bridge detects a data parity error on the secondary bus or detects P_PERR# asserted during the completion phase of an upstream delayed write transaction on the target (primary) bus.

Table 5-6. Assertion of S_PERR#

S_PERR#	Transaction Type	Direction	Bus Where Error Was Detected	Primary/ Secondary Parity Error Response Bits
1 (de-asserted)	Read	Downstream	Primary	x / x
0 (asserted)	Read	Downstream	Secondary	x / 1
1	Read	Upstream	Primary	x / x
1	Read	Upstream	Secondary	x / x
1	Posted Write	Downstream	Primary	x / x
1	Posted Write	Downstream	Secondary	x / x
1	Posted Write	Upstream	Primary	x / x
0	Posted Write	Upstream	Secondary	x / 1
1	Delayed Write	Downstream	Primary	x / x
1	Delayed Write	Downstream	Secondary	x / x
0[2]	Delayed Write	Upstream	Primary	1 / 1
0	Delayed Write	Upstream	Secondary	x / 1

X = don't care
[2]The parity error was detected on the target (secondary) bus but not on the initiator (primary) bus.

Table 5-7 shows assertion of P_SERR#. This signal is set under the following conditions:

- The bridge has detected P_PERR# asserted on an upstream posted write transaction or S_PERR# asserted on a downstream posted write transaction.
- The bridge did not detect the parity error as a target of the posted write transaction.
- The parity error response bit on the command register and the parity error response bit on the bridge control register must both be set.
- The SERR# enable bit must be set in the command register.

Table 5-7. Assertion of P_SERR# for Data Parity Errors

P_SERR#	Transaction Type	Direction	Bus Where Error Was Detected	Primary / Secondary Parity Error Response Bits
1 (de-asserted)	Read	Downstream	Primary	x / x
1	Read	Downstream	Secondary	x / x
1	Read	Upstream	Primary	x / x
1	Read	Upstream	Secondary	x / x
1	Posted Write	Downstream	Primary	x / x
0[2] (asserted)	Posted Write	Downstream	Secondary	1 / 1
0[3]	Posted Write	Upstream	Primary	1 / 1
1	Posted Write	Upstream	Secondary	x / x
1	Delayed Write	Downstream	Primary	x / x
1	Delayed Write	Downstream	Secondary	x / x
1	Delayed Write	Upstream	Primary	x / x
1	Delayed Write	Upstream	Secondary	x / x

X = don't care
[2]The parity error was detected on the target (secondary) bus but not on the initiator (primary) bus.
[3]The parity error was detected on the target (primary) bus but not on the initiator (secondary) bus.

5.4 SYSTEM ERROR (SERR#) REPORTING

The bridge uses the P_SERR# signal to report conditionally a number of system error conditions in addition to the special case parity error conditions described in Section 5.2.3.

Whenever assertion of P_SERR# is discussed in this document, it is assumed that the following conditions apply:

- For the bridge to assert P_SERR# for any reason, the SERR# enable bit must be set in the command register.
- Whenever the bridge asserts P_SERR#, the bridge must also set the signaled system error bit in the status register.

In compliance with the *PCI-to-PCI Bridge Architecture Specification*, the bridge asserts P_SERR# when it detects the secondary SERR# input, S_SERR#, asserted and the SERR# forward enable bit is set in the bridge control register. In addition, the bridge also sets the received system error bit in the secondary status register.

The bridge also conditionally asserts P_SERR# for any of the following reasons:

- Target abort detected during posted write transaction
- Master abort detected during posted write transaction
- Posted write data discarded after 2^{24} (default) attempts to deliver (2^{24} target retries received)
- Parity error reported on target bus during posted write transaction (see previous section)
- Delayed write data discarded after 2^{24} (default) attempts to deliver (2^{24} target retries received)

- Delayed read data cannot be transferred from target after 2^{24} (default) attempts (2^{24} target retries received)
- Master timeout on delayed transaction

The device-specific P_SERR# status register reports the reason for the assertion of P_SERR#. Most of these events have additional device-specific disable bits in the P_SERR# event disable register that make it possible to mask out P_SERR# assertion for specific events. The master timeout condition has a SERR# enable bit for that event in the bridge control register and therefore does not have a device-specific disable bit.

6 PCI BUS ARBITRATION

The bridge must arbitrate for use of the primary bus when forwarding upstream transactions. Also, it must arbitrate for use of the secondary bus when forwarding downstream transactions. The arbiter for the primary bus resides external to the bridge, typically on the motherboard. For the secondary PCI bus, the bridge implements an internal arbiter. This arbiter can be disabled, and an external arbiter can be used instead. This chapter describes primary and secondary bus arbitration.

6.1 PRIMARY PCI BUS ARBITRATION

The bridge implements a request output pin, P_REQ#, and a grant input pin, P_GNT#, for primary PCI bus arbitration. The bridge asserts P_REQ# when forwarding transactions upstream; that is, it acts as initiator on the primary PCI bus. As long as at least one pending transaction resides in the queues in the upstream direction, either posted write data or delayed transaction requests, the bridge keeps P_REQ# asserted. However, if a target retry, target disconnect, or a target abort is received in response to a transaction initiated by the bridge on the primary PCI bus, the bridge de-asserts P_REQ# for two PCI clock cycles.

For all cycles through the bridge, P_REQ# is not asserted until the transaction request has been completely queued. When P_GNT# is asserted LOW by the primary bus arbiter after the bridge has asserted P_REQ#, the bridge initiates a transaction on the primary bus during the next PCI clock cycle. When P_GNT# is asserted to the bridge when P_REQ# is not asserted, the bridge parks P_AD, P_CBE, and P_PAR by driving them to valid logic levels. When the primary bus is parked at the bridge and the bridge has a transaction to initiate on the primary bus, the bridge starts the transaction if P_GNT# was asserted during the previous cycle.

6.2 SECONDARY PCI BUS ARBITRATION

The bridge implements an internal secondary PCI bus arbiter. This arbiter supports four external masters on the secondary bus in addition to the PI7C8140A. The secondary arbiter supports a programmable 2-level rotating algorithm. If the bridge detects that an initiator has failed to assert S_FRAME# after 16 cycles of both grant assertion and a secondary idle bus condition, the arbiter de-asserts the grant.

To prevent bus contention, if the secondary PCI bus is idle, the arbiter never asserts one grant signal in the same PCI cycle in which it de-asserts another. It de-asserts one grant and asserts the next grant, no earlier than one PCI clock cycle later. If the secondary PCI bus is busy, that is, S_FRAME# or

S_IRDY# is asserted, the arbiter can be de-asserted one grant and asserted another grant during the same PCI clock cycle.

6.2.1 PREEMPTION

Preemption can be programmed to be either on or off, with the default to on (offset 4Ch, bit [31:28]). Time-to-preempt can be programmed to 0, 1, 2, 4, 8, 16, 32, or 64 (default is 0) clocks. If the current master occupies the bus and other masters are waiting, the current master will be preempted by removing its grant (GNT#) after the next master waits for the time-to-preempt.

6.2.2 BUS PARKING

Bus parking refers to driving the AD[31:0], CBE[3:0], and PAR lines to a known value while the bus is idle. In general, the device implementing the bus arbiter is responsible for parking the bus or assigning another device to park the bus. A device parks the bus when the bus is idle, its bus grant is asserted, and the device's request is not asserted. The AD and CBE signals should be driven first, with the PAR signal driven one cycle later.

The bridge parks the primary bus only when P_GNT# is asserted, P_REQ# is de-asserted, and the primary PCI bus is idle. When P_GNT# is de-asserted, the bridge 3-states the P_AD, P_CBE, and P_PAR signals on the next PCI clock cycle. If the bridge is parking the primary PCI bus and wants to initiate a transaction on that bus, then the bridge can start the transaction on the next PCI clock cycle by asserting P_FRAME# if P_GNT# is still asserted.

If the internal secondary bus arbiter is enabled, the secondary bus is always parked at the last master that used the PCI bus. That is, the bridge keeps the secondary bus grant asserted to a particular master until a new secondary bus request comes along. After reset, the bridge parks the secondary bus at itself until transactions start occurring on the secondary bus. Offset 48h, bit [1], can be set to 1 to park the secondary bus at PI7C8140A. By default, offset 48h, bit [1], is set to 0.

7 CLOCKS

This chapter provides information about the clocks.

7.1 PRIMARY CLOCK INPUTS

The bridge implements a primary clock input for the PCI interface. The primary interface is synchronized to the primary clock input, P_CLK, and the secondary interface is synchronized to the secondary clock. In synchronous mode, the secondary clock is derived internally from the primary clock, P_CLK. The bridge operates at a maximum frequency of 66 MHz.

7.2 SECONDARY CLOCK OUTPUTS

The bridge has 4 secondary clock outputs, S_CLKOUT[3:0] that can be used as clock inputs for up to four external secondary bus devices. The S_CLKOUT[3:0] outputs are derived from P_CLK. The secondary clock edges are delayed from P_CLK edges by a minimum of 0ns.

7.3 PCI CLOCKRUN

The bridge supports the PCI clock run protocol defined in the *PCI Mobile Design Guide 1.0*. P_CLKRUN# is set HIGH when the system's central resource initiates to stop the primary clock (P_CLK). The bridge will then signal that it allows the PCI clock to be stopped by keeping P_CLKRUN# HIGH, or it will initiate P_CLK to remain running by driving P_CLKRUN# LOW for 2 clocks. After the 2 clocks have elapsed, the system's central resource will keep P_CLKRUN# LOW. There are 3 conditions where the bridge will keep the primary clock running:

- Bit [26] offset 6Ch is set to 1
- There is a pending transaction running through the bridge
- A secondary device requires the clock

The secondary clock run protocol is enabled by bit [25] offset 6Ch. The primary is responsible for the initiation of stopping or slowing down the secondary clock. The exception to this is if bit[28] offset 6Ch is set to 1. In this situation, the secondary clock will be stopped when the bus is idle and there are no other cycles from the primary bus.

8 COMPACT PCI HOT SWAP

Compact PCI (cPCI) Hot Swap (PICMG 2.1, R1.0) defines a process for installing and removing PCI boards form a Compact PCI system without powering down the system. The PI7C8140A is Hot Swap Friendly silicon that supports all the cPCI Hot Swap Capable features and adds support for Software Connection Control. Being Hot Swap Friendly, the bridge supports the following:

- Compliance with PCI Specification 2.2
- Tolerates V_{CC} from Early Power
- Asynchronous Reset
- Tolerates Precharge Voltage
- I/O Buffers Meet Modified V/I Requirements
- Limited I/O Pin Leakage at Precharge Voltage

The bridge provides two pins to support hot swap: ENUM# and LOO. The ENUM# output indicates to the system that an insertion event occurred or that an extraction is about to occur. The LOO output lights an LED to signal insertion- and removal-ready status.

9 PCI POWER MANAGEMENT

The bridge incorporates functionality that meets the requirements of the *PCI Power Management Specificatio*n, *Revision 1.1*. These features include:

- PCI Power Management registers using the Enhanced Capabilities Port (ECP) address mechanism
- Support for D0, $D3_{hot}$, and $D3_{cold}$ power management states
- Support for D0, D1, D2, $D3_{hot}$, and $D3_{cold}$ power management states for devices behind the bridge
- Support of the B2 secondary bus power state when in the $D3_{hot}$ power management state

Table 9-1 shows the states and related actions that the bridge performs during power management transitions. (No other transactions are permitted.)

Table 9-1. Power Management Transitions

Current Status	Next State	Action
D0	D3cold	Power has been removed from bridge. A power-up reset must be performed to bring bridge to D0.
D0	D3hot	If enabled to do so by the BPCCE pin, bridge will disable the secondary clocks and drive them LOW.
D0	D2	Unimplemented power state. bridge will ignore the write to the power state bits (power state remains at D0).
D0	D1	Unimplemented power state. bridge will ignore the write to the power state bits (power state remains at D0).
D3hot	D0	Bridge enables secondary clock outputs and performs an internal chip reset. Signal S_RST# will not be asserted. All registers will be returned to the reset values and buffers will be cleared.
D3hot	D3cold	Power has been removed from bridge. A power-up reset must be performed to bring bridge to D0.
D3cold	D0	Power-up reset. Bridge performs the standard power-up reset functions as described in Section 10.

PME# signals are routed from downstream devices around PCI-to-PCI bridges. PME# signals do not pass through PCI-to-PCI bridges.

10 RESET

This chapter describes the primary interface, secondary interface, and chip reset mechanisms.

10.1 PRIMARY INTERFACE RESET

The bridge has a reset input, P_RST#. When P_RST# is asserted, the following events occur:

- Bridge immediately tri-states all primary and secondary PCI interface signals.
- Bridge performs a chip reset.
- Registers that have default values are reset.

P_RST# asserting and de-asserting edges can be asynchronous to P_CLK and S_CLKOUT. The bridge is not accessible during P_RST#. After P_RST# is de-asserted, the bridge remains inaccessible for 16 PCI clocks before the first configuration transaction can be accepted.

10.2 SECONDARY INTERFACE RESET

The bridge is responsible for driving the secondary bus reset signals, S_RST#. The bridge asserts S_RST# when any of the following conditions are met:

Signal P_RST# is asserted. Signal S_RST# remains asserted as long as P_RST# is asserted and does not de-assert until P_RST# is de-asserted.

The secondary reset bit in the bridge control register is set. Signal S_RST# remains asserted until a configuration write operation clears the secondary reset bit.

S_RST# pin is asserted. When S_RST# is asserted, the bridge immediately 3-states all the secondary PCI interface signals associated with the secondary port. The S_RST# in asserting and de-asserting edges can be asynchronous to P_CLK.

When S_RST# is asserted, all secondary PCI interface control signals, including the secondary grant outputs, are immediately 3-stated. Signals S1_AD, S1_CBE#[3:0], S_PAR are driven low for the duration of S_RST# assertion. All posted write and delayed transaction data buffers are reset. Therefore, any transactions residing inside the buffers at the time of secondary reset are discarded.

When S_RST# is asserted by means of the secondary reset bit, the bridge remains accessible during secondary interface reset and continues to respond to accesses to its configuration space from the primary interface.

10.3 CHIP RESET

The chip reset bit in the diagnostic control register can be used to reset the bridge and the secondary bus.

When the chip reset bit is set, all registers and chip state are reset and all signals are tristated. S_RST# is asserted and the secondary reset bit is automatically set. S_RST# remains asserted until a configuration write operation clears the secondary reset bit and the serial clock mask has been shifted in. Within 20 PCI clock cycles after completion of the configuration write operation, the bridge's reset bit automatically clears and the bridge is ready for configuration.

During reset, the bridge is inaccessible.

11 SUPPORTED COMMANDS

The PCI command set is given below for the primary and secondary interfaces.

11.1 PRIMARY INTERFACE

P_CBE [3:0]	Command	Action
0000	Interrupt Acknowledge	Ignore
0001	Special Cycle	Do not claim. Ignore.
0010	I/O Read	1. If address is within pass through I/O range, claim and pass through. 2. Otherwise, do not pass through and do not claim for internal access.
0011	I/O Write	Same as I/O Read.
0100	Reserved	-----
0101	Reserved	-----
0110	Memory Read	1. If address is within pass through memory range, claim and pass through. 2. If address is within pass through memory mapped I/O range, claim and pass through. 3. Otherwise, do not pass through and do not claim for internal access.
0111	Memory Write	Same as Memory Read.
1000	Reserved	-----
1001	Reserved	-----
1010	Configuration Read	**Type 0 Configuration Read:** If the bridge's IDSEL line is asserted, perform function decode and claim if target function is implemented. Otherwise, ignore. If claimed, permit access to target function's configuration registers. Do not pass through under any circumstances. **Type 1 Configuration Read:** 1. If the target bus is the bridge's secondary bus: claim and pass through as a Type 0 Configuration Read. 2. If the target bus is a subordinate bus that exists behind the bridge (but not equal to the secondary bus): claim and pass through as a Type 1 Configuration Read. 3. Otherwise, ignore.
1011	Configuration Write	**Type 0 Configuration Write: same as Configuration Read.** **Type 1 Configuration Write (not special cycle request):** 1. If the target bus is the bridge's secondary bus: claim and pass through as a Type 0 Configuration Write 2. If the target bus is a subordinate bus that exists behind the bridge (but not equal to the secondary bus): claim and pass through unchanged as a Type 1 Configuration Write. 3. Otherwise, ignore. **Configuration Write as Special Cycle Request** **(device = 1Fh, function = 7h)** 1. If the target bus is the bridges secondary bus: claim and pass through as a special cycle. 2. If the target bus is a subordinate bus that exists behind the bridge (but not equal to the secondary bus): claim and pass through unchanged as a type 1 Configuration Write. 3. Otherwise ignore
1100	Memory Read Multiple	Same as Memory Read
1101	Dual Address Cycle	Supported

P_CBE [3:0]	Command	Action
1110	Memory Read Line	Same as Memory Read
1111	Memory Write and Invalidate	Same as Memory Read

11.2 SECONDARY INTERFACE

S_CBE[3:0]	Command	Action
0000	Interrupt Acknowledge	Ignore
0001	Special Cycle	Do not claim. Ignore.
0010	I/O Read	Same as Primary Interface
0011	I/O Write	Same as I/O Read.
0100	Reserved	-----
0101	Reserved	-----
0110	Memory Read	Same as Primary Interface
0111	Memory Write	Same as Memory Read.
1000	Reserved	-----
1001	Reserved	-----
1010	Configuration Read	Ignore
1011	Configuration Write	**I. Type 0 Configuration Write: Ignore** **II. Type 1 Configuration Write (not special cycle request):Ignore** **III. Configuration Write as Special Cycle Request (device = 1Fh, function = 7h):** 1. If the target bus is the bridge's primary bus: claim and pass through as a Special Cycle 2. If the target bus is neither the primary bus nor is it in range of buses defined by the bridge's secondary and subordinate bus registers: claim and pass through unchanged as a Type 1 Configuration Write. 3. If the target bus is not the bridge's primary bus, but is in range of buses defined by the bridge's secondary and subordinate bus registers: ignore.
1100	Memory Read Multiple	Same as Memory Read
1101	Dual Address Cycle	Supported
1110	Memory Read Line	Same as Memory Read
1111	Memory Write and Invalidate	Same as Memory Read

12 BRIDGE BEHAVIOR

A PCI cycle is initiated by asserting the FRAME# signal. In a bridge, there are a number of possibilities. Those possibilities are summarized in the table below:

12.1 BRIDGE ACTIONS FOR VARIOUS CYCLE TYPES

Initiator	Target	Response
Master on Primary	Target on Primary	Bridge does not respond. It detects this situation by decoding the address as well as monitoring the P_DEVSEL# for other fast and medium devices on the Primary Port.

Initiator	Target	Response
Master on Primary	Target on Secondary	Bridge asserts P_DEVSEL#, terminates the cycle normally if it is able to be posted, otherwise return with a retry. It then passes the cycle to the appropriate port. When the cycle is complete on the target port, it will wait for the initiator to repeat the same cycle and end with normal termination.
Master on Primary	Target not on Primary nor Secondary Port	Bridge does not respond and the cycle will terminate as master abort.
Master on Secondary	Target on the same Secondary Port	Bridge does not respond.
Master on Secondary	Target on Primary or the other Secondary Port	Bridge asserts S_DEVSEL#, terminates the cycle normally if it is able to be posted, otherwise returns with a retry. It then passes the cycle to the appropriate port. When cycle is complete on the target port, it will wait for the initiator to repeat the same cycle and end with normal termination.
Master on Secondary	Target not on Primary nor the other Secondary Port	Bridge does not respond.

12.2 ABNORMAL TERMINATION (INITIATED BY BRIDGE MASTER)

12.2.1 MASTER ABORT

Master abort indicates that when the bridge acts as a master and receives no response (i.e., no target asserts DEVSEL# or S_DEVSEL#) from a target, the bridge de-asserts FRAME# and then deasserts IRDY#.

12.2.2 PARITY AND ERROR REPORTING

Parity must be checked for all addresses and write data. Parity is defined on the P_PAR, and S_PAR signals. Parity should be even (i.e. an even number of‘1’s) across AD, CBE, and PAR. Parity information on PAR is valid the cycle after AD and CBE are valid. For reads, even parity must be generated using the initiators CBE signals combined with the read data. Again, the PAR signal corresponds to read data from the previous data phase cycle.

12.2.3 REPORTING PARITY ERRORS

For all address phases, if a parity error is detected, the error should be reported on the P_SERR# signal by asserting P_SERR# for one cycle and then 3-stating two cycles after the bad address. P_SERR# can only be asserted if bit 6 and 8 in the Command Register are both set to 1. For write data phases, a parity error should be reported by asserting the P_PERR_L signal two cycles after the data phase and should remain asserted for one cycle when bit 6 in the Command register is set to a 1. The target reports any type of data parity errors during write cycles, while the master reports data parity errors during read cycles.

Detection of an address parity error will cause the PCI-to-PCI Bridge target to not claim the bus (P_DEVSEL# remains inactive) and the cycle will then terminate with a Master Abort. When the bridge

is acting as master, a data parity error during a read cycle results in the bridge master initiating a Master Abort.

12.2.4 SECONDARY IDSEL MAPPING

When the bridge detects a Type 1 configuration transaction for a device connected to the secondary, it translates the Type 1 transaction to Type 0 transaction on the downstream interface. Type 1 configuration format uses a 5-bit field at P_AD[15:11] as a device number. This is translated to S_AD[31:16] by the bridge.

13 CONFIGURATION REGISTERS

PCI configuration defines a 64-byte DWORD to define various attributes of PI7C8140A as shown below.

13.1 REGISTER TYPES

REGISTER TYPE	DEFINITION
RO	Read Only
RW	Read / Write
RWC	Read / Write 1 to Clear
RWR	Read / Write 1 to Reset (for about 20 clocks)
RWS	Read / Write 1 to Set

13.2 CONFIGURATION REGISTER

31 – 24	23 – 16	15 – 8	7 – 0	DWORD ADDRESS
Device ID		Vendor ID		00h
Primary Status		Command		04h
Class Code			Revision ID	08h
Reserved	Header Type	Primary Latency Timer	Cache Line Size	0Ch
Reserved				10h – 14h
Secondary Latency Timer	Subordinate Bus Number	Secondary Bus Number	Primary Bus Number	18h
Secondary Status		I/O Limit Address	I/O Base Address	1Ch
Memory Limit Address		Memory Base Address		20h
Prefetchable Memory Limit Address		Prefetchable Memory Base Address		24h
Prefetchable Memory Base Address Upper 32-bit				28h
Prefetchable Memory Limit Address Upper 32-bit				2Ch
I/O Limit Address Upper 16-bit		I/O Base Address Upper 16-bit		30h
Reserved			Capability Pointer	34h
Reserved				38h
Bridge Control		Interrupt Pin	Interrupt Line	3Ch
Subsystem ID		Subsystem Vendor ID		40h
Arbiter Control		Diagnostic / Chip Control		44h
Reserved		Extended Chip Control		48h
Secondary Bus Arbiter Preemption Control	Reserved			4Ch
Reserved				50h – 60h
Reserved			P_SERR# Event Disable	64h
Reserved	P_SERR# Status	Secondary Clock Control		68h
CLKRUN	Reserved			6Ch
Reserved				70h
Reserved		Port Option		74h
Reserved				78h – 7Ch
Power Management Capabilities		Next Item Pointer	Capability ID	80h
Reserved		Power Management Data		84h
Secondary Master Timeout Counter		Primary Master Timeout Counter		88h
Reserved				8Ch
Reserved	HSCSR	Next Item Pointer	Capability ID	90h
Reserved			Hot Swap Switch	94h
Reserved				98h – BFh

31 – 24	23 – 16	15 – 8	7 – 0	DWORD ADDRESS
Reserved		Miscellaneous Control	Reserved	C0h
Reserved				C4h - FFh

13.2.1 VENDOR ID REGISTER – OFFSET 00h

Bit	Function	Type	Description
15:0	Vendor ID	RO	Identifies Pericom as the vendor of this device. Hardwired as 12D8h.

13.2.2 DEVICE ID REGISTER – OFFSET 00h

Bit	Function	Type	Description
31:16	Device ID	RO	Identifies this device as the PI7C8140A. Reset to 8140h.

13.2.3 COMMAND REGISTER – OFFSET 04h

Bit	Function	Type	Description
0	I/O Space Enable	RW	0: ignore I/O transactions on the primary interface 1: enable response to I/O transactions on the primary interface Reset to 0
1	Memory Space Enable	RW	0: ignore memory transactions on the primary interface 1: enable response to memory transactions on the primary interface Reset to 0
2	Bus Master Enable	RW	0: do not initiate memory or I/O transactions on the primary interface and disable response to memory and I/O transactions on the secondary interface 1: enables bridge to operate as a master on the primary interfaces for memory and I/O transactions forwarded from the secondary interface Reset to 0
3	Special Cycle Enable	RO	No special cycles defined. Bit is defined as read only and returns 0 when read
4	Memory Write And Invalidate Enable	RO	Bridge does not generate memory write and invalidate transactions except for forwarding a transaction for another master. Bit is implemented as read only and returns 0 when read (unless forwarding a transaction for another master)
5	VGA Palette Snoop Enable	RW	0: ignore VGA palette accesses on the primary 1: enable positive decoding response to VGA palette writes on the primary interface with I/O address bits AD[9:0] equal to 3C6h, 3C8h, and 3C9h (inclusive of ISA alias; AD[15:10] are not decoded and may be any value) Reset to 0
6	Parity Error Response	RW	0: bridge may ignore any parity errors that it detects and continue normal operation 1: bridge must take its normal action when a parity error is detected Reset to 0

Bit	Function	Type	Description
7	Wait Cycle Control	RO	Read as 0 to indicate PI7C8140A does not perform address / data stepping. Reset to 0
8	P_SERR# enable	RW	0: disable the P_SERR# driver 1: enable the P_SERR# driver Reset to 0
9	Fast Back-to-Back Enable	RW	0: disable bridge's ability to initiate fast back-to-back transactions on the primary 1: enable bridge's ability to initiate fast back-to-back transactions on the primary Reset to 0
15:10	Reserved	RO	Returns 000000 when read

13.2.4 PRIMARY STATUS REGISTER – OFFSET 04h

Bit	Function	Type	Description
19:16	Reserved	RO	Reset to 0000
20	Capabilities List	RO	Set to 1 to enable support for the capability list (offset 34h is the pointer to the data structure) Reset to 1
21	66MHz Capable	RO	Set to 1 to indicate the primary may be run at 66MHz operation Reset to 1
22	Reserved	RO	Reset to 0
23	Fast Back-to-Back Capable	RO	Set to 1 to enable decoding of fast back-to-back transactions on the primary interface to different targets Reset to 1
24	Data Parity Error Detected	RWC	0: No parity error detected on the primary (bridge is the primary bus master) 1: Parity error detected on the primary (bridge is the primary bus master) Reset to 0
26:25	DEVSEL# timing	RO	DEVSEL# timing (medium decoding) 01: medium DEVSEL# decoding Reset to 01
27	Signaled Target Abort	RWC	Set to 1 (by a target device) whenever a target abort cycle occurs Reset to 0
28	Received Target Abort	RWC	Set to 1 (by a master device) whenever transactions are terminated with target aborts Reset to 0
29	Received Master Abort	RWC	Set to 1 (by a master) when transactions are terminated with Master Abort Reset to 0
30	Signaled System Error	RWC	Set to 1 when P_SERR# is asserted Reset to 0
31	Detected Parity Error	RWC	Set to 1 when address or data parity error is detected on the primary interface Reset to 0

13.2.5 REVISION ID REGISTER – OFFSET 08h

Bit	Function	Type	Description
7:0	Revision	RO	Indicates revision number of device. Hardwired to 00h

13.2.6 CLASS CODE REGISTER – OFFSET 08h

Bit	Function	Type	Description
15:8	Programming Interface	RO	Read as 00h to indicate no programming interfaces have been defined for PCI-to-PCI bridges
23:16	Sub-Class Code	RO	Read as 04h to indicate device is PCI-to-PCI bridge
31:24	Base Class Code	RO	Read as 06h to indicate device is a bridge device

13.2.7 CACHE LINE REGISTER – OFFSET 0Ch

Bit	Function	Type	Description
7:0	Cache Line Size	RW	Designates the cache line size for the system and is used when terminating memory write and invalidate transactions and when prefetching memory read transactions. Only cache line sizes (in units of 4-byte) which are a power of two are valid (only one bit can be set in this register; only 00h, 01h, 02h, 04h, 08h, and 10h are valid values). Reset to 0

13.2.8 PRIMARY LATENCY TIMER REGISTER – OFFSET 0Ch

Bit	Function	Type	Description
15:8	Primary Latency timer	RW	This register sets the value for the Master Latency Timer, which starts counting when the master asserts FRAME#. Reset to 0

13.2.9 HEADER TYPE REGISTER – OFFSET 0Ch

Bit	Function	Type	Description
23:16	Header Type	RO	Read as 01h to indicate that the register layout conforms to the standard PCI-to-PCI bridge layout.

13.2.10 PRIMARY BUS NUMBER REGISTER – OFFSET 18h

Bit	Function	Type	Description
7:0	Primary Bus Number	RW	Indicates the number of the PCI bus to which the primary interface is connected. The value is set in software during configuration. Reset to 0

13.2.11 SECONDARY BUS NUMBER REGISTER – OFFSET 18h

Bit	Function	Type	Description
15:8	Secondary Bus Number	RW	Indicates the number of the PCI bus to which the secondary interface is connected. The value is set in software during configuration. Reset to 0

13.2.12 SUBORDINATE BUS NUMBER REGISTER – OFFSET 18h

Bit	Function	Type	Description
23:16	Subordinate Bus Number	RW	Indicates the number of the PCI bus with the highest number that is subordinate to the bridge. The value is set in software during configuration. Reset to 0

13.2.13 SECONDARY LATENCY TIMER REGISTER – OFFSET 18h

Bit	Function	Type	Description
31:24	Secondary Latency Timer	RW	Latency timer for secondary. Indicates the number of PCI clocks from the assertion of S_FRAME# to the expiration of the timer when the bridge is acting as a master on the secondary. 0: Bridge ends the transaction after the first data transfer when the bridge's secondary bus grant has been deasserted, with the exception of memory write and invalidate transactions. Reset to 0

13.2.14 I/O BASE ADDRESS REGISTER – OFFSET 1Ch

Bit	Function	Type	Description
3:0	32-bit Indicator	RO	Read as 01h to indicate 32-bit I/O addressing
7:4	I/O Base Address [15:12]	RW	Defines the bottom address of the I/O address range for the bridge to determine when to forward I/O transactions from one interface to the other. The upper 4 bits correspond to address bits [15:12] and are writable. The lower 12 bits corresponding to address bits [11:0] are assumed to be 0. The upper 16 bits corresponding to address bits [31:16] are defined in the I/O base address upper 16 bits address register Reset to 0

13.2.15 I/O LIMIT ADDRESS REGISTER – OFFSET 1Ch

Bit	Function	Type	Description
11:8	32-bit Indicator	RO	Read as 01h to indicate 32-bit I/O addressing

Bit	Function	Type	Description
15:12	I/O Limit Address [15:12]	RW	Defines the top address of the I/O address range for the bridge to determine when to forward I/O transactions from one interface to the other. The upper 4 bits correspond to address bits [15:12] and are writable. The lower 12 bits corresponding to address bits [11:0] are assumed to be FFFh. The upper 16 bits corresponding to address bits [31:16] are defined in the I/O limit address upper 16 bits address register Reset to 0

13.2.16 SECONDARY STATUS REGISTER – OFFSET 1Ch

Bit	Function	Type	Description
20:16	Reserved	RO	Reset to 0
21	66MHz Capable	RO	Set to 1 to indicate bridge is capable of 66MHz operation on the secondary interface Reset to 1
22	Reserved	RO	Reset to 0
23	Fast Back-to-Back Capable	RO	Set to 1 to indicate bridge is capable of decoding fast back-to-back transactions on the secondary interface to different targets Reset to 1
24	Data Parity Error Detected	RWC	Set to 1 when S_PERR# is asserted and bit 6 of command register is set Reset to 0
26:25	DEVSEL_L timing	RO	DEVSEL# timing (medium decoding) 01: medium DEVSEL# decoding Reset to 01
27	Signaled Target Abort	RWC	Set to 1 (by a target device) whenever a target abort cycle occurs on its secondary interface Reset to 0
28	Received Target Abort	RWC	Set to 1 (by a master device) whenever transactions on its secondary interface are terminated with target abort Reset to 0
29	Received Master Abort	RWC	Set to 1 (by a master) when transactions on its secondary interface are terminated with Master Abort Reset to 0
30	Received System Error	RWC	Set to 1 when S_SERR# is asserted Reset to 0
31	Detected Parity Error	RWC	Set to 1 when address or data parity error is detected on the secondary interface Reset to 0

13.2.17 MEMORY BASE ADDRESS REGISTER – OFFSET 20h

Bit	Function	Type	Description
3:0	Reserved	RO	Reset to 0

Bit	Function	Type	Description
15:4	Memory Base Address [15:4]	RW	Defines the bottom address of an address range for the bridge to determine when to forward memory transactions from one interface to the other. The upper 12 bits correspond to address bits [31:20] and are writable. The lower 20 bits corresponding to address bits [19:0] are assumed to be 0. Reset to 0

13.2.18 MEMORY LIMIT ADDRESS REGISTER – OFFSET 20h

Bit	Function	Type	Description
19:16	Reserved	RO	Reset to 0
31:20	Memory Limit Address [31:20]	RW	Defines the top address of an address range for the bridge to determine when to forward memory transactions from one interface to the other. The upper 12 bits correspond to address bits [31:20] and are writable. The lower 20 bits corresponding to address bits [19:0] are assumed to be FFFFFh.

13.2.19 PREFETCHABLE MEMORY BASE ADDRESS REGISTER – OFFSET 24h

Bit	Function	Type	Description
3:0	64-bit addressing	RO	Indicates 64-bit addressing 0001: 64-bit addressing Reset to 1
15:4	Prefetchable Memory Base Address [31:20]	RW	Defines the bottom address of an address range for the bridge to determine when to forward memory read and write transactions from one interface to the other. The upper 12 bits correspond to address bits [31:20] and are writable. The lower 20 bits are assumed to be 0. The memory base register upper 32 bits contains the upper half of the base address.

13.2.20 PREFETCHABLE MEMORY LIMIT ADDRESS REGISTER – OFFSET 24h

Bit	Function	Type	Description
19:16	64-bit addressing	RO	Indicates 64-bit addressing 0001: 64-bit addressing Reset to 1
31:20	Prefetchable Memory Limit Address [31:20]	RW	Defines the top address of an address range for the bridge to determine when to forward memory read and write transactions from one interface to the other. The upper 12 bits correspond to address bits [31:20] and are writable. The lower 20 bits are assumed to be FFFFFh. The memory limit upper 32 bits register contains the upper half of the limit address.

13.2.21 PREFETCHABLE MEMORY BASE ADDRESS UPPER 32-BITS REGISTER – OFFSET 28h

Bit	Function	Type	Description
31:0	Prefetchable Memory Base Address, Upper 32-bits [63:32]	RW	Defines the upper 32-bits of a 64-bit bottom address of an address range for the bridge to determine when to forward memory read and write transactions from one interface to the other. Reset to 0

13.2.22 PREFETCHABLE MEMORY LIMIT ADDRESS UPPER 32-BITS REGISTER – OFFSET 2Ch

Bit	Function	Type	Description
31:0	Prefetchable Memory Limit Address, Upper 32-bits [63:32]	RW	Defines the upper 32-bits of a 64-bit top address of an address range for the bridge to determine when to forward memory read and write transactions from one interface to the other. Reset to 0

13.2.23 I/O BASE ADDRESS UPPER 16-BITS REGISTER – OFFSET 30h

Bit	Function	Type	Description
15:0	I/O Base Address, Upper 16-bits [31:16]	RW	Defines the upper 16-bits of a 32-bit bottom address of an address range for the bridge to determine when to forward I/O transactions from one interface to the other. Reset to 0

13.2.24 I/O LIMIT ADDRESS UPPER 16-BITS REGISTER – OFFSET 30h

Bit	Function	Type	Description
31:16	I/O Limit Address, Upper 16-bits [31:16]	RW	Defines the upper 16-bits of a 32-bit top address of an address range for the bridge to determine when to forward I/O transactions from one interface to the other. Reset to 0

13.2.25 CAPABILITY POINTER REGISTER – OFFSET 34h

Bit	Function	Type	Description
7:0	Capability Pointer	RO	Pointer points to the PCI power management registers (80h). Reset to 80h

13.2.26 INTERRUPT LINE REGISTER – OFFSET 3Ch

Bit	Function	Type	Description
7:0	Interrupt Line	RW	Bridge does not implement an interrupt signal, so POST programs FFh to this register.

13.2.27 INTERRUPT PIN REGISTER – OFFSET 3Ch

Bit	Function	Type	Description
15:8	Interrupt Pin	RO	Bridge does not implement interrupt signal pins. Reset to 0

13.2.28 BRIDGE CONTROL REGISTER – OFFSET 3Ch

Bit	Function	Type	Description
16	Parity Error Response	RW	0: ignore address and data parity errors on the secondary interface 1: enable parity error reporting and detection on the secondary interface Reset to 0
17	S_SERR# enable	RW	0: disable the forwarding of S_SERR# to primary interface 1: enable the forwarding of S_SERR# to primary interface Reset to 0
18	ISA enable	RW	Modifies the bridge's response to ISA I/O addresses, applying only to those addresses falling within the I/O base and limit address registers and within the first 64KB of PCI I/O space. 0: forward all I/O addresses in the range defined by the I/O base and I/O limit registers 1: blocks forwarding of ISA I/O addresses in the range defined by the I/O base and I/O limit registers that are in the first 64KB of I/O space that address the last 768 bytes in each 1KB block. Secondary I/O transactions are forwarded upstream if the address falls within the last 768 bytes in each 1KB block Reset to 0
19	VGA enable	RW	0: does not forward VGA compatible memory and I/O addresses from primary to secondary 1: forward VGA compatible memory and I/O addresses from primary to secondary regardless of other settings Reset to 0
20	Reserved	R/O	Reserved. Returns 0 when read. Reset to 0
21	Master Abort Mode	RW	0: does not report master aborts (returns FFFF_FFFFh on reads and discards data on writes) 1: reports master aborts by signaling target abort if possible or by the assertion of P_SERR# if enabled Reset to 0
22	Secondary Interface Reset	RW	0: does not force the assertion of S_RESET# pin 1: forces the assertion of S_RESET# Reset to 0
23	Fast Back-to-Back Enable	RW	Controls bridge's ability to generate fast back-to-back transactions to different devices on the secondary interface. 0: does not generate fast back-to-back transactions on the secondary 1: enables fast back-to-back transaction generation on the secondary Reset to 0

Bit	Function	Type	Description
24	Primary Master Timeout	R/W	Determines the maximum number of PCI clock cycles the bridge waits for an initiator on the primary interface to repeat a delayed transaction request. 0: Primary discard timer counts 2^{15} PCI clock cycles. 1: Primary discard timer counts 2^{10} PCI clock cycles. Reset to 0
25	Secondary Master Timeout	RW	Determines the maximum number of PCI clock cycles the bridge waits for an initiator on the secondary interface to repeat a delayed transaction request. 0: Secondary discard timer counts 2^{15} PCI clock cycles. 1: Secondary discard timer counts 2^{10} PCI clock cycles. Reset to 0
26	Master Timeout Status	RWC	This bit is set to 1 when either the primary master timeout counter or secondary master timeout counter expires. Reset to 0
27	Discard Timer P_SERR# enable	RW	This bit is set to 1 and P_SERR# is asserted when either the primary discard timer or the secondary discard timer expire. 0: P_SERR# is not asserted on the primary interface as a result of the expiration of either the Primary Discard Timer or the Secondary Discard Timer. 1: P_SERR# is asserted on the primary interface as a result of the expiration of either the Primary Discard Timer or the Secondary Discard Timer. Reset to 0
31-28	Reserved	RO	Reserved. Returns 0 when read. Reset to 0.

13.2.29 SUBSYSTEM VENDOR ID REGISTER – OFFSET 40h

Bit	Function	Type	Description
15:0	Subsystem Vendor ID	RW	Subsystem Vendor ID for add-in card manufacturers. Reset to 0

13.2.30 SUBSYSTEM ID REGISTER – OFFSET 40h

Bit	Function	Type	Description
31:16	Subsystem ID	RW	Subsystem ID for add-in card manufacturers. Reset to 0

13.2.31 DIAGNOSTIC/CHIP CONTROL REGISTER – OFFSET 44h

Bit	Function	Type	Description
0	Reserved	RO	Reserved. Returns 0 when read. Reset to 0

Bit	Function	Type	Description
1	Memory Write Disconnect Control	RW	Controls when the bridge (as a target) disconnects memory write transactions. 0: memory write disconnects at 4KB aligned address boundary 1: memory write disconnects at cache line aligned address boundary Reset to 0
3:2	Reserved	RO	Reserved. Returns 0 when read. Reset to 0.
4	Secondary Bus Prefetch Disable	RW	Controls the bridge's ability to prefetch during upstream memory read transactions 0: Bridge prefetches and does not forward byte enable bits during upstream memory read transactions. 1: Bridge requests only 1 DWORD from the target and forwards read byte enable bits during upstream memory reads. Reset to 0
7:5	Reserved	RO	Reserved. Returns 0 when read. Reset to 0
8	Chip Reset	RWR	Controls the chip and secondary bus reset. 0: Bridge is ready for operation 1: Causes bridge to perform a chip reset. Data buffers, configuration registers, and both primary and secondary are reset to their initial states. Bridge clears this bit once chip reset is complete. Bridge can then be reconfigured.
9	Test Mode 1	RW	Controls the ability to test bridge's behavior 0: minimum of 8 free space in data FIFO to accept memory burst writes 1: minimum of 1 free space in data FIFO to accept memory burst writes Reset to 0
11:10	Test Mode 2	RW	Controls the ability to test bridge's behavior 00: enable out of order transactions between all 4 DTR requests 01: accept 3 DTR requests at a time and they may be out of order 10: only the 2 DTR requests at the top of the 2 FIFO's may be out of order 11: no out of order transactions supported between DTR requests Reset to 00
12	Test Mode 3	RW	Controls the ability to test bridge's behavior 0: 4 memory write transactions can be accepted at a time 1: 2 memory write transactions can be accepted at a time Reset to 0
15:13	Reserved	RO	Reserved. Returns 000 when read. Reset to 000.

13.2.32 ARBITER CONTROL REGISTER – OFFSET 44h

Bit	Function	Type	Description
19:16	Arbiter Control	RW	Each bit controls whether a secondary bus master is assigned to the high priority group or the low priority group. Bits [19:16] correspond to request inputs S_REQ#[3:0] 0: low priority 1: high priority Reset to 0
24:20	Reserved	RO	Reserved. Returns 0 when read. Reset to 0.
25	Priority of Secondary Interface	RW	Controls whether the secondary interface of the bridge is in the high priority group or the low priority group. 0: low priority 1: high priority Reset to 1
31:26	Reserved	RO	Reserved. Returns 0 when read. Reset to 0.

13.2.33 EXTENDED CHIP CONTROL REGISTER – OFFSET 48h

Bit	Function	Type	Description
0	Memory Read Flow Through Enable	RW	0: Disable flow through during a memory read transaction 1: Enable flow through during a memory read transaction Reset to 0
1	Park	RW	Controls bus arbiter's park function 0: Park to last master 1: Park to the bridge – secondary port Reset to 0
2	Downstream Dynamic Prefetching Control	RW	Controls the downstream (P to S) memory read line and memory read multiple prefetching dynamic control 0: Enable the downstream memory read line and memory read multiple prefetching dynamic control 1: Disable the downstream memory read line and memory read multiple prefetching dynamic control Reset to 0
3	Upstream Dynamic Prefetching Control	RW	Controls the upstream (S to P) memory read line and memory read multiple prefetching dynamic control 0: Enable the upstream memory read line and memory read multiple prefetching dynamic control 1: Disable the upstream memory read line and memory read multiple prefetching dynamic control Reset to 0

Bit	Function	Type	Description
4	Memory Read Data Buffer Control	RW	Ability to control bridge's behavior when the data buffer is empty 0: start returning memory read data right away and inserts wait states if the data buffer is empty 1: start returning memory read data after 1 cache line of data and disconnects the master if the data buffer is empty Reset to 0
15:5	Reserved	RO	Reserved. Returns 0 when read. Reset to 0

13.2.34 SECONDARY BUS ARBITER PREEMPTION CONTROL REGISTER – OFFSET 4Ch

Bit	Function	Type	Description
31:28	Secondary bus arbiter preemption control	RW	Controls the number of clock cycles after frame is asserted before preemption is enabled. 1xxx: Preemption off 0000: Preemption enabled after 0 clock cycles after FRAME asserted 0001: Preemption enabled after 1 clock cycle after FRAME asserted 0010: Preemption enabled after 2 clock cycles after FRAME asserted 0011: Preemption enabled after 4 clock cycles after FRAME asserted 0100: Preemption enabled after 8 clock cycles after FRAME asserted 0101: Preemption enabled after 16 clock cycles after FRAME asserted 0110: Preemption enabled after 32 clock cycles after FRAME asserted 0111: Preemption enabled after 64 clock cycles after FRAME asserted

13.2.35 P_SERR# EVENT DISABLE REGISTER – OFFSET 64h

Bit	Function	Type	Description
0	Reserved	RO	Reserved. Returns 0 when read. Reset to 0
1	Posted Write Parity Error	RW	Controls bridge's ability to assert P_SERR# when it is unable to transfer any read data from the target after 2^{24} attempts. 0: P_SERR# is asserted if this event occurs and the SERR# enable bit in the command register is set. 1: P_SERR# is not asserted if this event occurs. Reset to 0
2	Posted Write Non-Delivery	RW	Controls bridge's ability to assert P_SERR# when it is unable to transfer delayed write data after 2^{24} attempts. 0: P_SERR# is asserted if this event occurs and the SERR# enable bit in the command register is set 1: P_SERR# is not asserted if this event occurs Reset to 0

Bit	Function	Type	Description
3	Target Abort During Posted Write	RW	Controls bridge's ability to assert P_SERR# when it receives a target abort when attempting to deliver posted write data. 0: P_SERR# is asserted if this event occurs and the SERR# enable bit in the command register is set 1: P_SERR# is not asserted if this event occurs Reset to 0
4	Master Abort On Posted Write	RW	Controls bridge's ability to assert P_SERR# when it receives a master abort when attempting to deliver posted write data. 0: P_SERR# is asserted if this event occurs and the SERR# enable bit in the command register is set 1: P_SERR# is not asserted if this event occurs Reset to 0
5	Delayed Write Non-Delivery	RW	Controls bridge's ability to assert P_SERR# when it is unable to transfer delayed write data after 2^{24} attempts. 0: P_SERR# is asserted if this event occurs and the SERR# enable bit in the command register is set 1: P_SERR# is not asserted if this event occurs Reset to 0
6	Delayed Read – No Data From Target	RW	Controls bridge's ability to assert P_SERR# when it is unable to transfer any read data from the target after 2^{24} attempts. 0: P_SERR# is asserted if this event occurs and the SERR# enable bit in the command register is set 1: P_SERR# is not asserted if this event occurs Reset to 0
7	Reserved	RO	Reserved. Returns 0 when read. Reset to 0

13.2.36 SECONDARY CLOCK CONTROL REGISTER – OFFSET 68h

Bit	Function	Type	Description
1:0	S_CLKOUT[0] disable	RW	S_CLKOUT[0] (slot 0) Enable 00: enable S_CLKOUT[0] 01: enable S_CLKOUT[0] 10: enable S_CLKOUT[0] 11: disable S_CLKOUT[0] and driven LOW Reset to 00
3:2	Clock 1 disable	RW	S_CLKOUT[1] (slot 1) Enable 00: enable S_CLKOUT[1] 01: enable S_CLKOUT[1] 10: enable S_CLKOUT[1] 11: disable S_CLKOUT[1] and driven LOW Reset to 00

Bit	Function	Type	Description
5:4	Clock 2 disable	RW	S_CLKOUT[2] (slot 2) Enable 00: enable S_CLKOUT[2] 01: enable S_CLKOUT[2] 10: enable S_CLKOUT[2] 11: disable S_CLKOUT[2] and driven LOW Reset to 00
7:6	Clock 3 disable	RW	S_CLKOUT[3] (slot 3) Enable 00: enable S_CLKOUT[3] 01: enable S_CLKOUT[3] 10: enable S_CLKOUT[3] 11: disable S_CLKOUT[3] and driven LOW Reset to 00
8	Reserved	RO	Reserved. Reset to 0
13:9	Reserved	RO	Reserved. Reset to 1Fh
15:14	Reserved	RO	Reserved. Reset to 00

13.2.37 P_SERR# STATUS REGISTER – OFFSET 68h

Bit	Function	Type	Description
16	Address Parity Error	RWC	1: Signal P_SERR# was asserted because an address parity error was detected on P or S bus. Reset to 0
17	Posted Write Data Parity Error	RWC	1: Signal P_SERR# was asserted because a posted write data parity error was detected on the target bus. Reset to 0
18	Posted Write Non-delivery	RWC	1: Signal P_SERR# was asserted because the bridge was unable to deliver post memory write data to the target after 2^{24} attempts. Reset to 0
19	Target Abort during Posted Write	RWC	1: Signal P_SERR# was asserted because the bridge received a target abort when delivering post memory write data. Reset to 0.
20	Master Abort during Posted Write	RWC	1: Signal P_SERR# was asserted because the bridge received a master abort when attempting to deliver post memory write data Reset to 0.
21	Delayed Write Non-delivery	RWC	1: Signal P_SERR# was asserted because the bridge was unable to deliver delayed write data after 2^{24} attempts. Reset to 0
22	Delayed Read – No Data from Target	RWC	1: Signal P_SERR# was asserted because the bridge was unable to read any data from the target after 2^{24} attempts. Reset to 0.
23	Delayed Transaction Master Timeout	RWC	1: Signal P_SERR# was asserted because a master did not repeat a read or write transaction before master timeout. Reset to 0.

13.2.38 CLKRUN REGISTER – OFFSET 6Ch

Bit	Function	Type	Description
24	Secondary Clock Stop Status	RO	0: Secondary clock not stopped 1: Secondary clock stopped. Reset to 0
25	Secondary CLKRUN Enable	RW	0: Disable secondary CLKRUN 1: Enable secondary CLKRUN Reset to 0
26	Primary Clock Stop	RW	0: Allow primary clock to stop if secondary clock is stopped 1: Always keep primary clock running Reset to 0
27	Primary CLKRUN Enable	RW	0: Disable primary CLKRUN 1: Enable primary CLKRUN Reset to 0
28	CLKRUN mode	RW	0: Stop the secondary clock only on request from the primary bus 1: Stop the secondary clock whenever the secondary bus is idle and there are no requests from the primary bus Reset to 0
31:29	Reserved	RO	Reserved. Reset to 0.

13.2.39 PORT OPTION REGISTER – OFFSET 74h

Bit	Function	Type	Description
0	Reserved	RO	Reserved. Reset to 0
1	Primary Memory Read Command Alias Enable	RW	Controls bridge's detection mechanism for matching memory read retry cycles from the initiator on the primary interface 0: exact matching memory read retry cycles from initiator on the primary interface 1: alias MEMRL or MEMRM to MEMR for memory read retry cycles from the initiator on the primary interface Reset to 1
2	Primary Memory Write Command Alias Enable	RW	Controls bridge's detection mechanism for matching non-posted memory write retry cycles from the initiator on the primary interface 0: exact matching for non-posted memory read retry cycles from initiator on the primary interface 1: alias MEMWI to MEMW for non-posted memory read retry cycles from initiator on the primary interface Reset to 0

Bit	Function	Type	Description
3	Secondary Memory Read Command Alias Enable	RW	Controls bridge's detection mechanism for matching memory read retry cycles from the initiator on the secondary 0: exact matching for memory read retry cycles from initiator on the secondary interface 1: alias MEMRL or MEMRM to MEMR for memory read retry cycles from initiator on the secondary interface Reset to 1
4	Secondary Memory Write Command Alias Enable	RW	Controls bridge's detection mechanism for matching non-posted memory write retry cycles from the initiator on the primary interface 0: exact matching for non-posted memory write retry cycles from initiator on the secondary interface 1: alias MEMWI to MEMW for non-posted memory write retry cycles from initiator on the secondary interface Reset to 0
5	Primary Memory Read Line/Multiple Alias Enable	RW	Control's bridge's detection mechanism for matching memory read line/multiple cycles from the initiator on the primary interface 0: exact matching for memory read line/multiple retry cycles from the initiator on the primary interface 1: alias MEMRL to MEMRM or MEMRM to MEMRL for memory read retry cycles from the initiator on the primary interface Reset to 1
6	Secondary Memory Read Line/Multiple Alias Enable	RW	Control's bridge's detection mechanism for matching memory read line/multiple cycles from the initiator on the secondary interface 0: exact matching for memory read line/multiple retry cycles from the initiator on the secondary interface 1: alias MEMRL to MEMRM or MEMRM to MEMRL for memory read retry cycles from the initiator on the secondary interface Reset to 1
7	Primary Memory Write and Invalidate Command Alias Disable	RW	Controls bridge's detection mechanism for matching non-posted memory write and invalidate cycles from the initiator on the primary interface 0: When accepting MEMWI command at the primary interface, bridge converts MEMWI to MEMW command on the destination interface 1: When accepting MEMWI command at the primary interface, bridge does not convert MEMWI to MEMW command on the destination interface Reset to 0
8	Secondary Memory Write and Invalidate Command Alias Disable	RW	Controls bridge's detection mechanism for matching non-posted memory write and invalidate cycles from the initiator on the secondary interface 0: When accepting MEMWI command at the secondary interface, bridge converts MEMWI to MEMW command on the destination interface 1: When accepting MEMWI command at the secondary interface, bridge does not convert MEMWI to MEMW command on the destination interface Reset to 0

Bit	Function	Type	Description
9	Enable Long Request	RW	Controls bridge's ability to enable long requests for lock cycles 0: normal lock operation 1: enable long request for lock cycle Reset to 0
10	Enable Secondary To Hold Request Longer	RW	Control's bridge's ability to enable the secondary bus to hold requests longer. 0: internal secondary master will release REQ# after FRAME# assertion 1: internal secondary master will hold REQ# until there is no transactions pending in FIFO or until terminated by target Reset to 1
11	Enable Primary To Hold Request Longer	RW	Control's bridge's ability to hold requests longer at the Primary Port. 0: internal Primary master will release REQ# after FRAME# assertion 1: internal Primary master will hold REQ# until there is no transactions pending in FIFO or until terminated by target Reset to 1
15:12	Reserved	RO	Reserved. Returns 0 when read. Reset to 0.

13.2.40 CAPABILITY ID REGISTER – OFFSET 80h

Bit	Function	Type	Description
7:0	Enhanced Capabilities ID	RO	Read as 01h to indicate that these are power management enhanced capability registers.

13.2.41 NEXT ITEM POINTER REGISTER – OFFSET 80h

Bit	Function	Type	Description
15:8	Next Item Pointer	RO	Read as 90h. No other ECP registers.

13.2.42 POWER MANAGEMENT CAPABILITIES REGISTER – OFFSET 80h

Bit	Function	Type	Description
18:16	Power Management Revision	RO	Read as 010 to indicate the device is compliant to Revision 1.1 of *PCI Power Management Interface Specifications.*
19	PME# Clock	RO	Read as 0 to indicate bridge does not support the PME# pin.
20	Auxiliary Power	RO	Read as 0 to indicate bridge does not support the PME# pin or an auxiliary power source.
21	Device Specific Initialization	RO	Read as 0 to indicate bridge does not have device specific initialization requirements.
24:22	Reserved	RO	Read as 0
25	D1 Power State Support	RO	Read as 1 to indicate bridge supports the D1 power management state.
26	D2 Power State Support	RO	Read as 1 to indicate bridge supports the D2 power management state.
31:27	PME# Support	RO	Read as 0 to indicate bridge does not support the PME# pin.

13.2.43 POWER MANAGEMENT DATA REGISTER – OFFSET 84h

Bit	Function	Type	Description
1:0	Power State	RW	Indicates the current power state of the bridge. If an unimplemented power state is written to this register, the bridge completes the write transaction, ignores the write data, and does not change the value of the field. Writing a value of D0 when the previous state was D3 cause a chip reset without asserting S_RESET# 00: D0 state 01: D1 state 10: D2 state 11: D3 state Reset to 0
7:2	Reserved	RO	Read as 0
8	PME# Enable	RO	Read as 0 as the bridge does not support the PME# pin.
12:9	Data Select	RO	Read as 0 as the data register is not implemented.
14:13	Data Scale	RO	Read as 0 as the data register is not implemented.
15	PME status	RO	Read as 0 as the PME# pin is not implemented.

13.2.44 PRIMARY MASTER TIMEOUT COUNTER REGISTER – OFFSET 88h

Bit	Function	Type	Description
15:0	Primary Timeout	RW	Primary timeout occurs after 2^{15} PCI clocks. Reset to 8000h.

13.2.45 SECONDARY MASTER TIMEOUT COUNTER REGISTER – OFFSET 88h

Bit	Function	Type	Description
31:16	Secondary Timeout	RW	Secondary timeout occurs after 2^{15} PCI clocks. Reset to 8000h.

13.2.46 CAPABILITY ID REGISTER – OFFSET 90h

Bit	Function	Type	Description
7:0	Enhanced Capabilities ID	RO	Read as 06h to indicate that these are power management enhanced capability registers.

13.2.47 NEXT ITEM POINTER REGISTER – OFFSET 90h

Bit	Function	Type	Description
15:8	Next Item Pointer	RO	Read as 00h. No other ECP registers.

13.2.48 HOT SWAP CAPABILITY STRUCTURE REGISTER – OFFSET 90h

Bit	Function	Type	Description
16	Device Hide Active	RW	0: Device is not hidden and PCI transactions are allowed during extraction state 1: Device is hidden and PCI transactions are not allowed during extraction state Reset to 0
17	ENUM# Signal Mask	RW	0: Enable ENUM# signal 1: Mask ENUM# signal Reset to 0
18	Reserved	RO	Reserved. Reset to 0
19	LED On/Off	RW	0: LED on 1: LED off Reset to 1
21:20	Reserved	RO	Reserved. Reset to 00
22	Extraction Status	RWC	Assertion of ENUM# based on a device being extracted 0: ENUM# asserted 1: ENUM# not asserted Reset to 0
23	Insertion Status	RWC	Assertion of ENUM# based on a device being inserted 0: ENUM# not asserted 1: ENUM# asserted Reset to 0

13.2.49 HOT SWAP SWITCH REGISTER – OFFSET 94h

Bit	Function	Type	Description
0	Soft Hot Swap Extraction Switch	RW	0: Pending extraction of board 1: Board is in the inserted state
7:1	Reserved	RO	Reserved. Reset to 0.

13.2.50 MISCELLANEOUS CONTROL REGISTER – OFFSET C0h

Bit	Function	Type	Description
8	Legacy ISA I/O Enable	RW	0: The following I/O addresses will not be claimed by the bridge and will not be forwarded on to the secondary bus 1: The following I/O addresses will be forwarded on to the secondary bus Game port: 0200h – 0207h FM: 0388h – 038bh Audio: 0220h – 0233h MIDI: 0330h – 0331h Reset to 0

Bit	Function	Type	Description
15:9	Reserved	RO	Reserved. Reset to 0

14 ELECTRICAL AND TIMING SPECIFICATIONS

14.1 MAXIMUM RATINGS

(Above which the useful life may be impaired. For user guidelines not tested).

Storage Temperature	-65°C to 150°C
Ambient Temperature with Power Applied	0°C to 85°C
Supply Voltage to Ground Potentials (AV_{CC} and V_{DD} only]	-0.3V to 3.6V
Voltage at Input Pins	-0.5V to 5.5V

Note:
Stresses greater than those listed under MAXIMUM RATINGS may cause permanent damage to the device. This is a stress rating only and functional operation of the device at these or any conditions above those indicated in the operational sections of this specification is not implied. Exposure to absolute maximum rating conditions for extended periods of time may affect reliability.

14.2 DC SPECIFICATIONS

Symbol	Parameter	Condition	Min.	Max.	Units	Notes
V_{DD}, AV_{CC}	Supply Voltage		3	3.6	V	
V_{ih}	Input HIGH Voltage		0.5 V_{DD}	V_{DD} + 0.5	V	3, 4
V_{il}	Input LOW Voltage		-0.5	0.3 V_{DD}	V	3, 4
V_{ih}	CMOS Input HIGH Voltage		0.7 V_{DD}	V_{DD} + 0.5	V	1, 4
V_{il}	CMOS Input LOW Voltage		-0.5	0.3 V_{DD}	V	1, 4
V_{ipu}	Input Pull-up Voltage		0.7 V_{DD}		V	3
I_{il}	Input Leakage Current	$0 < V_{in} < V_{DD}$		±10	µA	3
V_{oh}	Output HIGH Voltage	I_{out} = -500µA	0.9V_{DD}		V	3
V_{ol}	Output LOW Voltage	I_{out} = 1500µA		0.1 V_{DD}	V	3
V_{oh}	CMOS Output HIGH Voltage	I_{out} = -500µA	V_{DD} – 0.5		V	2
V_{ol}	CMOS Output LOW Voltage	I_{out} = 1500µA		0.5	V	2
C_{in}	Input Pin Capacitance			10	pF	3
C_{CLK}	CLK Pin Capacitance		5	12	pF	3
C_{IDSEL}	IDSEL Pin Capacitance			8	pF	3
L_{pin}	Pin Inductance			20	nH	3

Notes:
1. CMOS Input pins: SCAN_EN, SCAN_TM#

2. PCI pins: P_AD[31:0], P_CBE[3:0], P_PAR, P_FRAME#, P_IRDY#, P_TRDY#, P_DEVSEL#, P_STOP#, P_LOCK#, P_IDSEL, P_PERR#, P_SERR#, P_REQ#, P_GNT#, P_RST, S_AD[31:0], S_CBE[3:0], S_PAR, S_FRAME#, S_IRDY#, S_TRDY#, S_DEVSEL#, S_STOP#, S_LOCK#, S_PERR#, S_SERR#, S_REQ#[3:0], S_GNT#[3:0], S_RST#, LOO, ENUM#.

3. V_{DD} is in reference to the V_{DD} of the input device.

14.3 AC SPECIFICATIONS

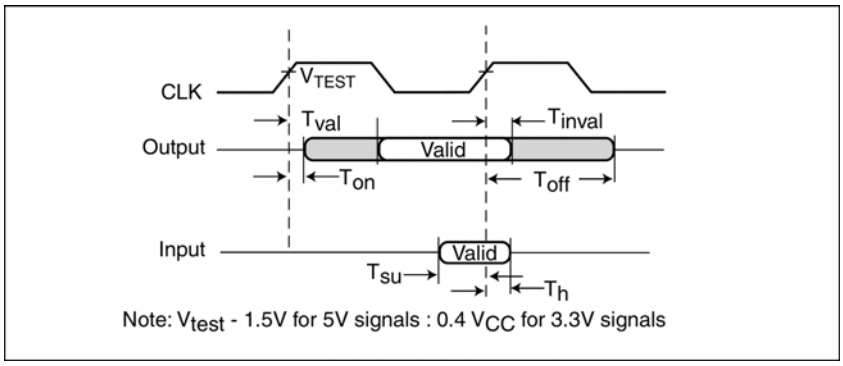

Figure 14-1 PCI Signal Timing Measurement Conditions

		66 MHz		33 MHz		
Symbol	**Parameter**	**Min.**	**Max.**	**Min.**	**Max.**	**Units**
Tsu	Input setup time to CLK – bused signals [1,2,3]	3	-	7	-	ns
Tsu(ptp)	Input setup time to CLK – point-to-point [1,2,3]	5	-	10, 12[4]	-	
Th	Input signal hold time from CLK [1,2]	0	-	0	-	
Tval	CLK to signal valid delay – bused signals [1,2,3]	2	6	2	11	
Tval(ptp)	CLK to signal valid delay – point-to-point [1,2,3]	2	6	2	12	
Ton	Float to active delay [1,2]	2	-	2	-	
Toff	Active to float delay [1,2]	-	14	-	28	

1. See Figure 14-1 PCI Signal Timing Measurement Conditions.

2. All primary interface signals are synchronized to P_CLK. All secondary interface signals are synchronized to S_CLKOUT.

3. Point-to-point signals are P_REQ#, S_REQ#[3:0], P_GNT#, S_GNT#[3:0], LOO, and ENUM#. Bused signals are P_AD, P_CBE#, P_PAR, P_PERR#, P_SERR#, P_FRAME#, P_IRDY#, P_TRDY#, P_LOCK#, P_DEVSEL#, P_STOP#, P_IDSEL, S_AD, S_CBE#, S_PAR, S_PERR#, S_SERR#, S_FRAME#, S_IRDY#, S_TRDY#, S_LOCK#, S_DEVSEL#, and S_STOP#.

4. REQ# signals have a setup of 10ns and GNT# signals have a setup of 12ns.

14.4 66MHZ TIMING

Symbol	Parameter	Condition	Min.	Max.	Units
T_{SKEW}	SKEW among S_CLKOUT[9:0]		0	0.250	ns
T_{DELAY}	DELAY between PCLK and S_CLKOUT[9:0]	20pF load	2.91	4.22	
T_{CYCLE}	P_CLK, S_CLKOUT[9:0] cycle time		15	30	
T_{HIGH}	P_CLK, S_CLKOUT[9:0] HIGH time		6		
T_{LOW}	P_CLK, S_CLKOUT[9:0] LOW time		6		

14.5 33MHZ TIMING

Symbol	Parameter	Condition	Min.	Max.	Units
T_{SKEW}	SKEW among S_CLKOUT[9:0]		0	0.250	ns
T_{DELAY}	DELAY between PCLK and S_CLKOUT[9:0]	20pF load	2.91	4.22	
T_{CYCLE}	P_CLK, S_CLKOUT[9:0] cycle time		30		
T_{HIGH}	P_CLK, S_CLKOUT[9:0] HIGH time		11		
T_{LOW}	P_CLK, S_CLKOUT[9:0] LOW time		11		

14.6 POWER CONSUMPTION

Parameter	Typical	Units
Power Consumption at 66MHz	759	mW
Supply Current, I_{CC}	230	mA

Note:
Values derived with V_{CC} = 3.3V @ 25°C

15 PACKAGE INFORMATION

15.1 128-PIN QFP PACKAGE OUTLINE

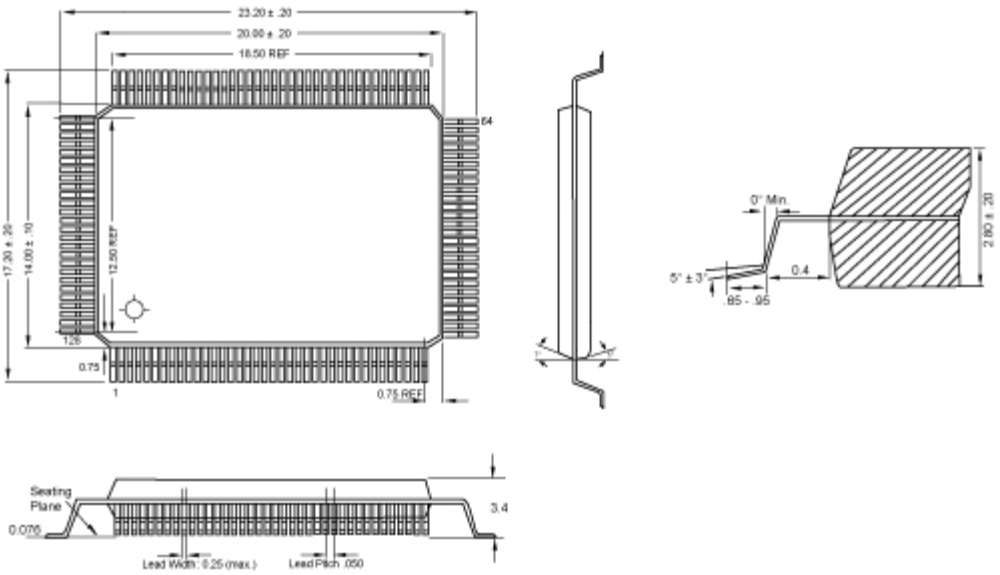

Figure 15-1 128-pin QFP package outline

Thermal characteristics can be found on the web: http://www.pericom.com/packaging/mechanicals.php

15.2 PART NUMBER ORDERING INFORMATION

PART NUMBER	SPEED	PIN – PACKAGE	TEMPERATURE
PI7C8140AMA	66 MHz	128 – QFP	0°C to 85°C
PI7C8140AMAE	66 MHz	128 – QFP (Pb-free)	0°C to 85°C