IPD Series

Automotive 2ch 45 mΩ High-Side Switch with Variable OCD and OCD Mask Function

BV2HC045EFU-C

General Description

BV2HC045EFU-C is a 2-ch high-side switch for automotive application. It has built-in over current protection function, thermal shutdown protection function, open load detection function and under voltage lockout function. It is equipped with diagnostic output function for abnormality detection. An external component can arbitrarily set the over current limit and the time to limit to achieve the optimum over current protection for the load.

Key Specifications

- Power Supply Voltage Operating Range: 6 V to 19 V
- On Resistance (Tj=25°C): 45 mΩ (Typ)
- Over Current Limit: 21 A (Min)
- Standby Current (Tj=25°C): 0.5 µA (Max)
- Active Clamp Tolerance ($Tj_{(START)}$= 25 °C): 35 mJ

Package	W (Typ) x D (Typ) x H (Max)
HSSOP-C16	4.90 mm x 6.00 mm x 1.70 mm

Features

- Dual TSD®*(Note 1)*
- AEC-Q100 Qualified*(Note 2)*
- Built-in Variable Over Current Limit Function
- Built-in Variable Over Current Mask Time Setting Function.
- Built-in Open Load Detection Function.
- Built-in Under Voltage Lockout Function (UVLO)
- Built-in Diagnostic Output
- Low On-Resistance R_{ON} = 45 mΩ (Typ)
- Monolithic Power Management IC with Control Unit (CMOS) and Power MOSFET on a Single Chip
- Low Voltage Operation (V_{BB} = 4.3 V)

(Note 1) This IC has thermal shutdown (Junction temperature detect) and ΔTj Protection (Power-MOS steep temperature rising detect).
(Note 2) Grade 1

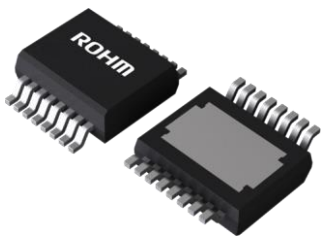

HSSOP-C16

Applications

- Resistive Load, Inductive Load, Capacitive Load

Typical Application Circuit

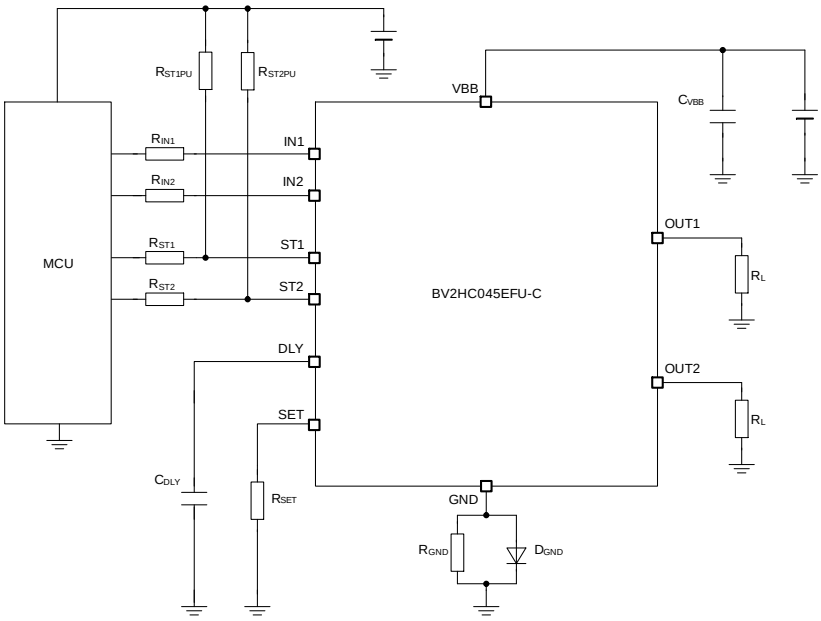

"Dual TSD®" is a registered trademark of ROHM Co., Ltd.

○Product structure : Silicon integrated circuit ○This product has no designed protection against radioactive rays.

© 2019 ROHM Co., Ltd. All rights reserved.

Table of Contents

General Description 1
Features 1
Applications 1
Key Specifications 1
Package 1
Typical Application Circuit 1
Table of Contents 2
Pin Configuration 3
Pin Description 3
Block Diagram 3
Definition 4
Absolute Maximum Ratings 5
Thermal Resistance 6
Recommended Operating Conditions 8
Electrical Characteristics 9
Typical Performance Curves 11
Measurement Circuit 16
Timing Chart (Propagation Delay Time) 18
Function Description 19
1. Protection Function 19
2. Over Current Protection 20
3. Open Load Detection 25
4. Thermal Shutdown, ΔTj Protection Detection 26
5. Other Protection 27
Applications Example 28
I/O Equivalence Circuits 29
Operational Notes 30
Ordering Information 32
Marking Diagram 32
Physical Dimension and Packing Information 33
Revision History 34

© 2019 ROHM Co., Ltd. All rights reserved.

Pin Configuration

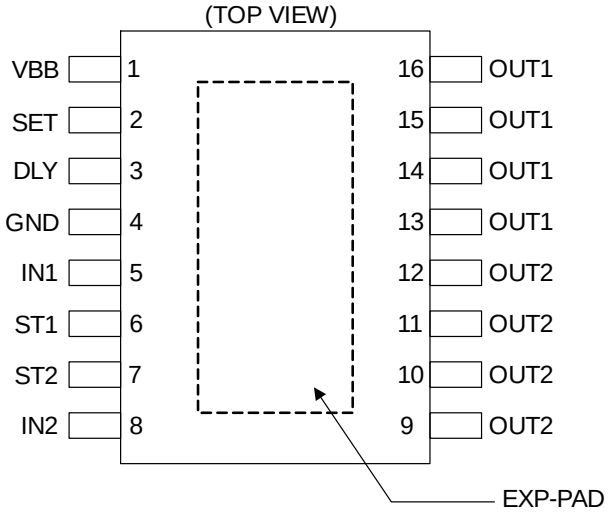

Pin Description

Pin No.	Pin Name	Function
1	VBB	Power supply pin
2	SET	Over current limit value setting pin
3	DLY	Over current mask time setting pin
4	GND	GND pin
5	IN1	Input pin1, with internal pull-down resistor
6	ST1	Diagnostic output pin1
7	ST2	Diagnostic output pin2
8	IN2	Input pin2, with internal pull-down resistor
9 to 12	OUT2	Output pin 2
13 to 16	OUT1	Output pin 1
-	EXP-PAD	The EXP-PAD is connected to VBB

Block Diagram

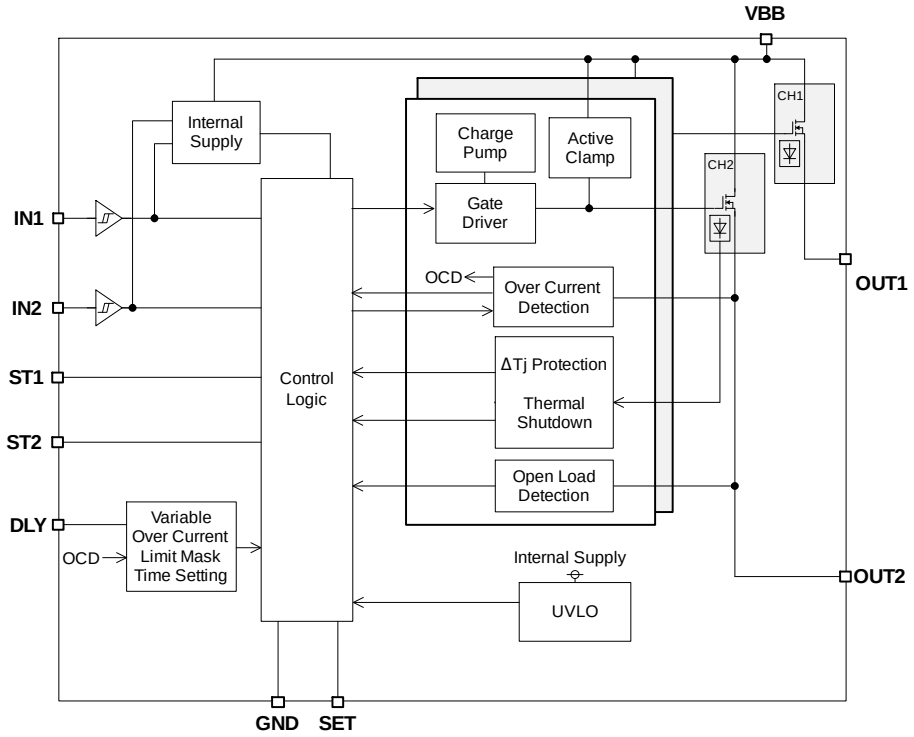

© 2019 ROHM Co., Ltd. All rights reserved.

Definition

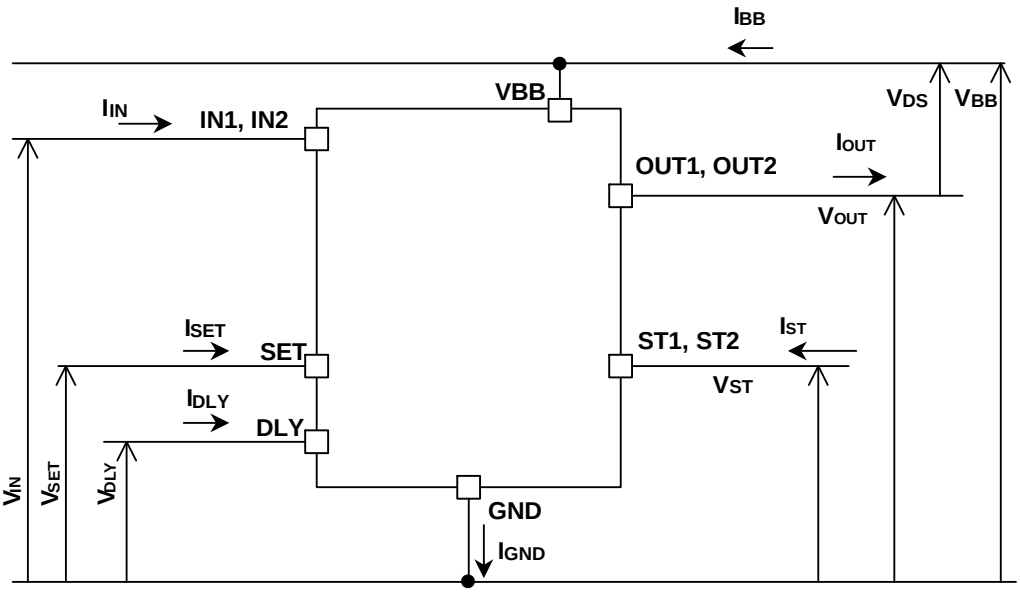

Figure 1. Voltage and Current Definition

© 2019 ROHM Co., Ltd. All rights reserved.

Absolute Maximum Ratings (Ta = 25 °C)

Parameter	Symbol	Rating	Unit
VBB - OUT Voltage	V_{DS}	-0.3 to Internal clamp(Note 1)	V
Power Supply Voltage	V_{BB}	-0.3 to +40	V
Set Voltage	V_{SET}	-0.3 to V_{BB}+0.3	V
Input Voltage	V_{IN}, V_{DLY}	-0.3 to +7.0	V
Diagnostic Output Voltage	V_{ST}	- 0.3 to +7.0	V
Output Current	I_{OUT}	Internal limit(Note 2)	A
Diagnostic Output Current	I_{ST}	10	mA
Storage Temperature Range	Tstg	-55 to +150	°C
Maximum Junction Temperature	Tjmax	150	°C
Active Clamp Energy (Single Pulse) $Tj_{(START)}$ = 25 °C, I_{OUT} = 4 A(Note 3)(Note 4)	$E_{AS\ (25\ °C)}$	35	mJ
Active Clamp Energy (Single Pulse) $Tj_{(START)}$ = 150 °C, I_{OUT} = 4 A(Note 3)(Note 4)	$E_{AS\ (150\ °C)}$	20	mJ
Supply Voltage for Short Circuit Protection(Note 5)	V_{BBLIM}	19	V

Caution 1: *Operating the IC over the absolute maximum ratings may damage the IC. The damage can either be a short circuit between pins or an open circuit between pins and the internal circuitry. Therefore, it is important to consider circuit protection measures, such as adding a fuse, in case the IC is operated over the absolute maximum ratings.*

Caution 2: *Should by any chance the maximum junction temperature rating be exceeded the rise in temperature of the chip may result in deterioration of the properties of the chip. In case of exceeding this absolute maximum rating, design a PCB with thermal resistance taken into consideration by increasing board size and copper area so as not to exceed the maximum junction temperature rating.*

(Note 1) Internally limited by output clamp voltage.

(Note 2) Internally limited by fixed over current limit.

(Note 3) Maximum active clamp energy using single pulse of $I_{OUT(START)}$ = 4 A and V_{BB} = 14 V.
When IC is turned off in the condition that inductive load is connected, the OUT pin is fell below 0 V. This energy is dissipated by BV2HC045EFU-C.
This energy can be calculated with following equation:

$$E_{AS} = V_{DS} \times \frac{L}{R_L} \times [\frac{V_{BB} - V_{DS}}{R_L} \times ln\left(1 - \frac{R_L \times I_{OUT(START)}}{V_{BB} - V_{DS}}\right) + I_{OUT(START)}]$$

Following equation simplifies under the assumption of R_L = 0 Ω.

$$E_{AS} = \frac{1}{2} \times L \times {I_{OUT(START)}}^2 \times (1 - \frac{V_{BB}}{V_{BB} - V_{DS}})$$

(Note 4) Not 100% tested.

(Note 5) Maximum power supply voltage that can detect short circuit protection.

© 2019 ROHM Co., Ltd. All rights reserved.

Thermal Resistance(Note 1)

Parameter	Symbol	Thermal Resistance (Typ)		Unit
		1s(Note 3)	2s2p(Note 4)	
HSSOP-C16				
Junction to Ambient	θ_{JA}	142.3	29.0	°C/W
Junction to Top Characterization Parameter(Note 2)	Ψ_{JT}	24	4	°C/W

(Note 1) Based on JESD51-2A(Still-Air). Using a BV2HC045EFU-C chip.
(Note 2) The thermal characterization parameter to report the difference between junction temperature and the temperature at the top center of the outside surface of the component package.
(Note 3) Using a PCB board based on JESD51-3.
(Note 4) Using a PCB board based on JESD51-5, 7.

Layer Number of Measurement Board	Material	Board Size
Single	FR-4	114.3 mm x 76.2 mm x 1.57 mmt

Top	
Copper Pattern	Thickness
Footprints and Traces	70 µm

Layer Number of Measurement Board	Material	Board Size	Thermal Via(Note 5)	
			Pitch	Diameter
4 Layers	FR-4	114.3 mm x 76.2 mm x 1.6 mmt	1.20 mm	Φ0.30 mm

Top		2 Internal Layers		Bottom	
Copper Pattern	Thickness	Copper Pattern	Thickness	Copper Pattern	Thickness
Footprints and Traces	70 µm	74.2 mm x 74.2 mm	35 µm	74.2 mm x 74.2 mm	70 µm

(Note 5) This thermal via connects with the copper pattern of all layers.

1. PCB Layout (1s)

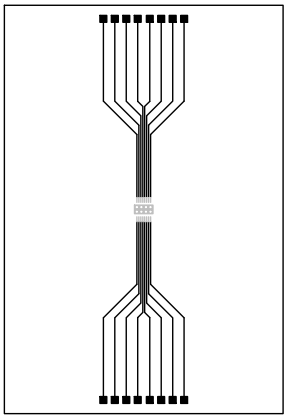

Footprint Only

Figure 2. PCB Layout (1s)

Dimension	Value
Board finish thickness	1.57 mmt
Board dimension	114.3 mm x 76.2 mm
Board material	FR4
Copper thickness (Top/Bottom layers)	0.070 mm (Cu : 2 oz)

© 2019 ROHM Co., Ltd. All rights reserved.

Thermal Resistance – continued

2. PCB Layout (2s)

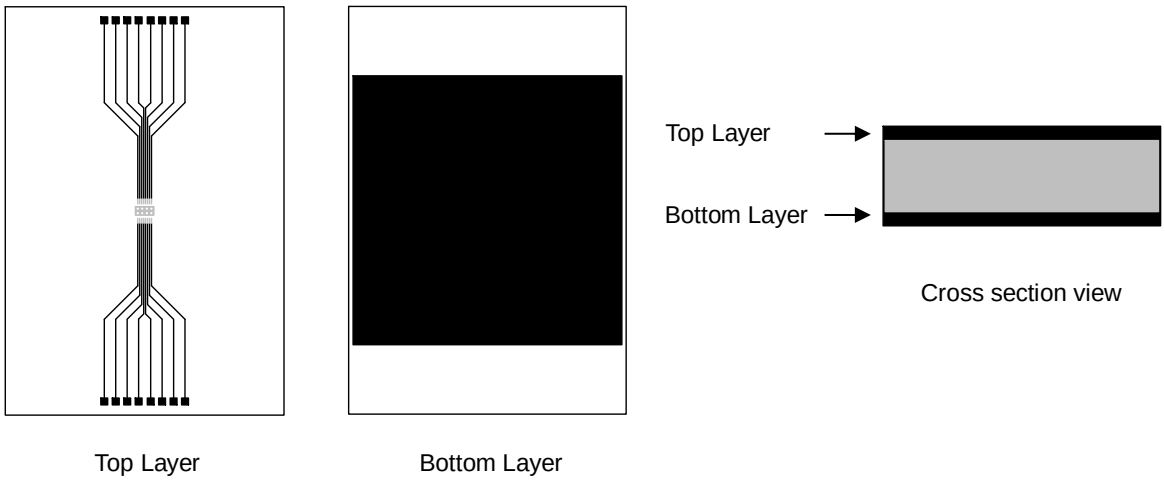

Figure 3. PCB Layout (2s)

Dimension	Value
Board finish thickness	1.60 mmt
Board dimension	114.3 mm x 76.2 mm
Board material	FR4
Copper thickness (Top/Bottom layers)	0.070 mm (Cu + plating)

3. PCB Layout (2s2p)

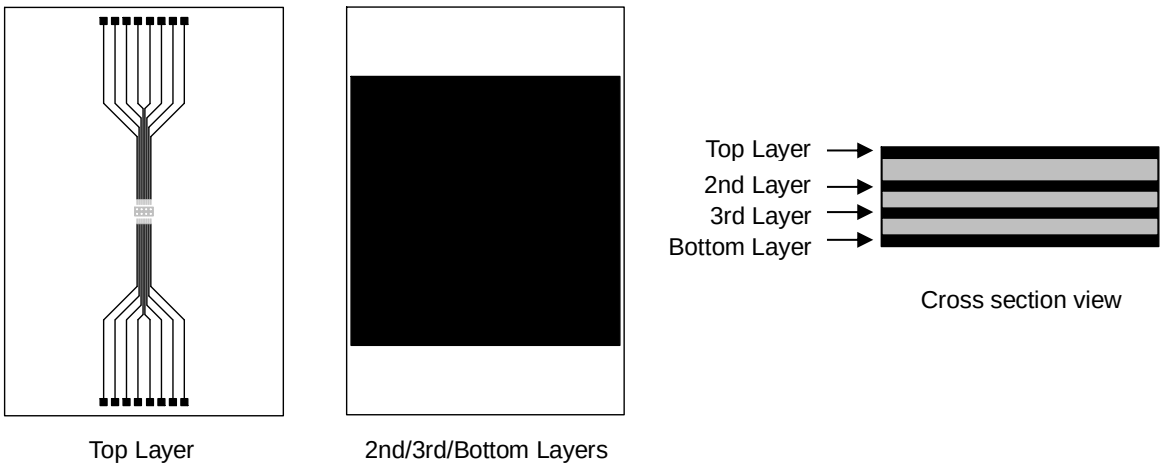

Figure 4. PCB Layout (2s2p)

Dimension	Value
Board finish thickness	1.60 mmt
Board dimension	114.3 mm x 76.2 mm
Board material	FR4
Copper thickness (Top/Bottom layers)	0.070 mm (Cu + plating)
Copper thickness (Inner layers)	0.035 mm

© 2019 ROHM Co., Ltd. All rights reserved.

Thermal Resistance – continued

4. Transient Thermal Resistance (Single Pulse)

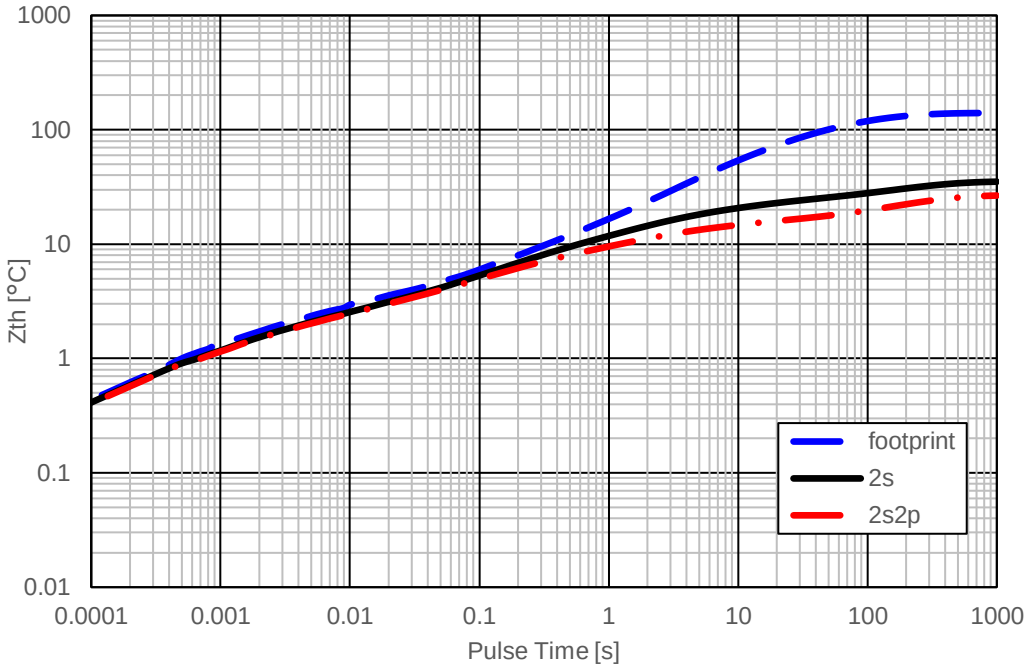

Figure 5. Transient Thermal Resistance

Recommended Operating Conditions

Parameter	Symbol	Min	Typ	Max	Unit
Power Supply Voltage Operating Range	V_{BB}	6	14	19	V
Operating Temperature	Topr	-40	-	+150	°C
Input Frequency	f_{IN}	-	-	1	kHz

© 2019 ROHM Co., Ltd. All rights reserved.

Electrical Characteristics (Unless otherwise specified 6 V ≤ V_{BB} ≤ 19 V, -40 °C ≤ Tj ≤ +150 °C)

Parameter	Symbol	Min	Typ	Max	Unit	Conditions
[Power Supply]						
Standby Current	I_{BBL}	-	-	0.5	µA	V_{BB} = 14 V, V_{IN1} = 0 V, V_{IN2} = 0 V V_{OUT1} = V_{OUT2} = 0 V, Tj = 25 °C
		-	-	30	µA	V_{BB} = 14 V, V_{IN1} = 0 V, V_{IN2} = 0 V V_{OUT1} = V_{OUT2} = 0 V, Tj = 150 °C
Operating Current	I_{BBH}	-	6	10	mA	V_{BB} = 14 V, V_{IN1} = V_{IN2} = 5 V V_{OUT1} = V_{OUT2} = open
UVLO Detection Voltage	V_{UVLO}	-	-	4.3	V	
UVLO Hysteresis Voltage	V_{UVHYS}	0.2	0.3	0.4	V	
[Input (V_{IN1}, V_{IN2})]						
High-Level Input Voltage	V_{INH}	2.8	-	-	V	
Low-Level Input Voltage	V_{INL}	-	-	1.5	V	
Input Voltage Hysteresis	V_{INHYS}	-	0.3	-	V	
High-Level Input Current	I_{INH}	-	50	150	µA	V_{IN1} = V_{IN2} = 5 V
Low-Level Input Current	I_{INL}	-10	-	+10	µA	V_{IN1} = V_{IN2} = 0 V
[Output]						
Output On Resistance	R_{ON}	-	45	60	mΩ	V_{BB} = 8 V to 19 V, Tj = 25 °C
		-	-	100	mΩ	V_{BB} = 8 V to 19 V, Tj = 150 °C
		-	-	75	mΩ	V_{BB} = 4.5 V, Tj = 25 °C
Output Leak Current	I_{OUTL}	-	-	0.5	µA	V_{IN1} = V_{IN2} = 0 V, V_{OUT1} = V_{OUT2} = 0 V, Tj = 25 °C
		-	-	10	µA	V_{IN1} = V_{IN2} = 0 V, V_{OUT1} = V_{OUT2} = 0 V, Tj = 150 °C
Output ON Slew Rate	SR_{ON}	-	0.3	1	V/µs	V_{BB} = 14 V, R_L = 6.5 Ω Tj = 25 °C
Output OFF Slew Rate	SR_{OFF}	-	0.3	1	V/µs	V_{BB} = 14 V, R_L = 6.5 Ω Tj = 25 °C
Output ON Propagation Delay Time	t_{OUTON}	-	70	175	µs	V_{BB} = 14 V, R_L = 6.5 Ω Tj = 25 °C
Output OFF Propagation Delay Time	t_{OUTOFF}	-	50	125	µs	V_{BB} = 14 V, R_L = 6.5 Ω Tj = 25 °C
Output Clamp Voltage	V_{DSCLP}	41	48	55	V	V_{IN1} = V_{IN2} = 0 V, I_{OUT1} = I_{OUT2} = 10 mA

© 2019 ROHM Co., Ltd. All rights reserved.

Electrical Characteristics (Unless otherwise specified 6 V ≤ V_{BB} ≤ 19 V, -40 °C ≤ Tj ≤ +150 °C) - continued

Parameter	Symbol	Min	Typ	Max	Unit	Conditions
[Diagnostic Output]						
Diagnostic Output Low Voltage	V_{STL}	-	-	0.5	V	V_{IN1} = V_{IN2} = 5 V, I_{ST1} = I_{ST2} = 1 mA
Diagnostic Output Leak Current	I_{STL}	-	-	10	µA	V_{IN1} = V_{IN2} = 0 V, V_{ST1} = V_{ST2} = 5 V
Diagnostic Output ON Propagation Delay Time	t_{STON}	-	100	250	µs	V_{BB} = 14 V, R_L = 6.5 Ω Tj = 25 °C
Diagnostic Output OFF Propagation Delay Time	t_{STOFF}	-	50	125	µs	V_{BB} = 14 V, R_L = 6.5 Ω Tj = 25 °C
[Diagnostic Function]						
Output ON Detection Voltage*(Note 1)*	V_{DSDET}	2	3	4	V	V_{IN1} = V_{IN2} = 5 V
Fixed Over Current Limit	I_{LIMH}	21	30	40	A	V_{IN1} = V_{IN2} = 5 V
Variable Over Current Limit	I_{LIMSET}	2.8	4.1	5.4	A	V_{IN1} = V_{IN2} = 5 V, R_{SET} = 47 kΩ
Open Load Detection Voltage	V_{OLD}	2.0	3.0	4.0	V	V_{IN1} = V_{IN2} = 0 V
Open Load Detection Sink Current	I_{OLD}	-30	-10	-	µA	V_{IN1} = V_{IN2} = 0 V, V_{OUT1} = V_{OUT2} = 5 V
Thermal Shutdown*(Note 1)*	T_{TSD}	150	175	200	°C	
Thermal Shutdown Hysteresis*(Note 1)*	T_{TSDHYS}	-	15	-	°C	
ΔTj Protection Temperature*(Note 1)*	T_{DTJ}	-	120	-	°C	

(Note 1) Not 100% tested.

© 2019 ROHM Co., Ltd. All rights reserved.

Typical Performance Curves
(Unless otherwise specified V_{BB} = 14 V, V_{IN1} = V_{IN2} = 5 V, Tj = 25 °C)

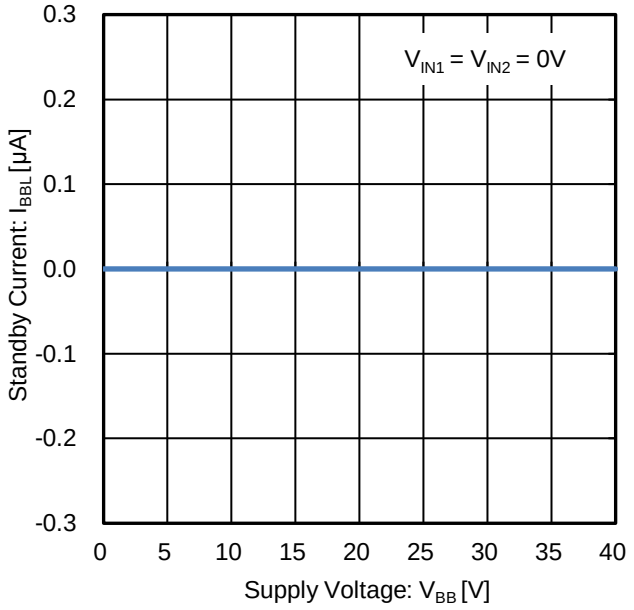

Figure 6. Standby Current vs Supply Voltage

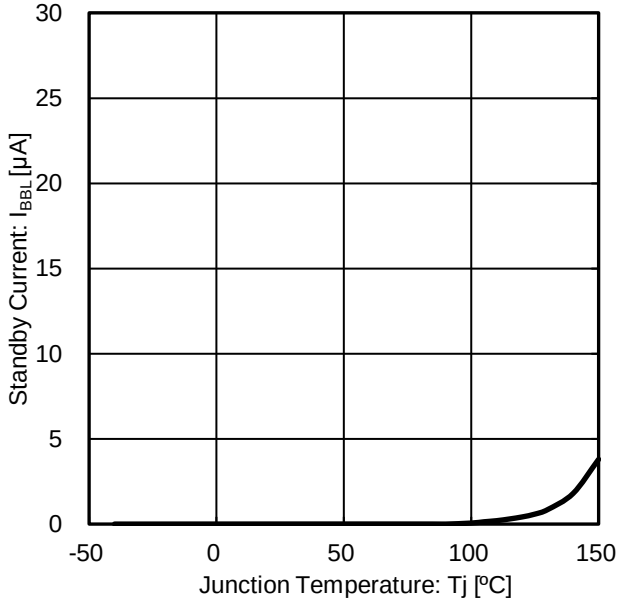

Figure 7. Standby Current vs Junction Temperature

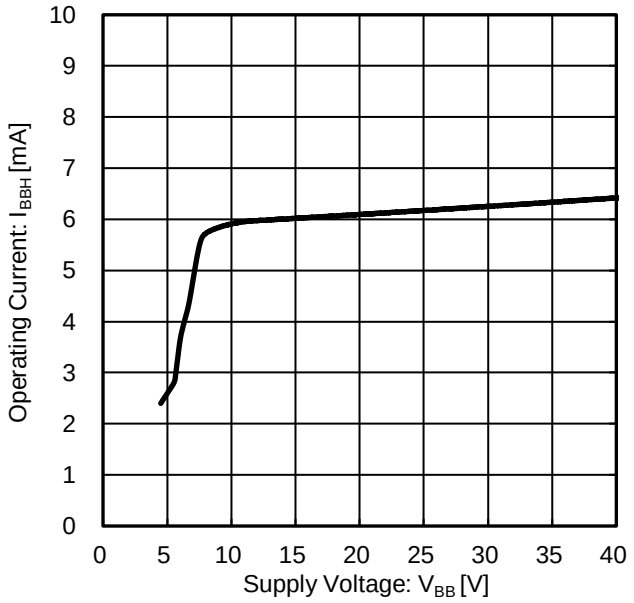

Figure 8. Operating Current vs Supply Voltage

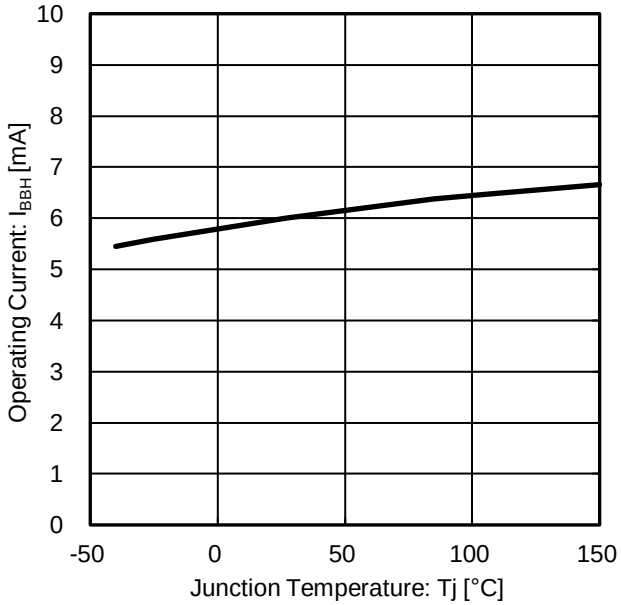

Figure 9. Operating Current vs Junction Temperature

© 2019 ROHM Co., Ltd. All rights reserved.

Typical Performance Curves - continued
(Unless otherwise specified V_{BB} = 14 V, V_{IN1} = V_{IN2} = 5 V, Tj = 25 °C)

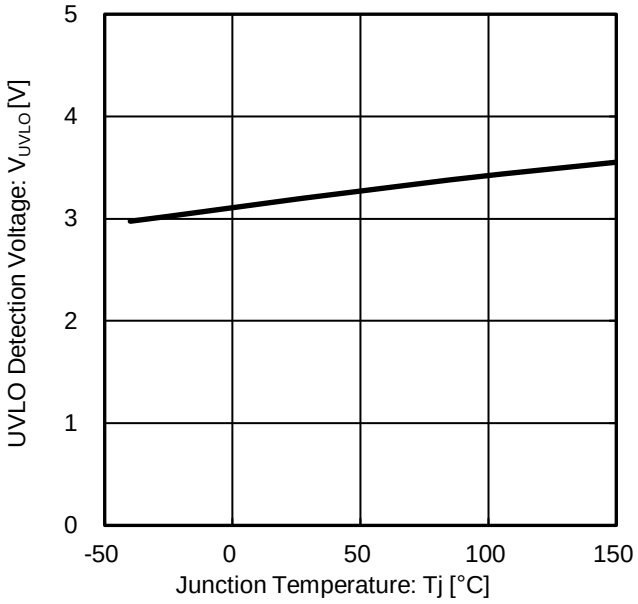

Figure 10. UVLO Detection Voltage vs Junction Temperature

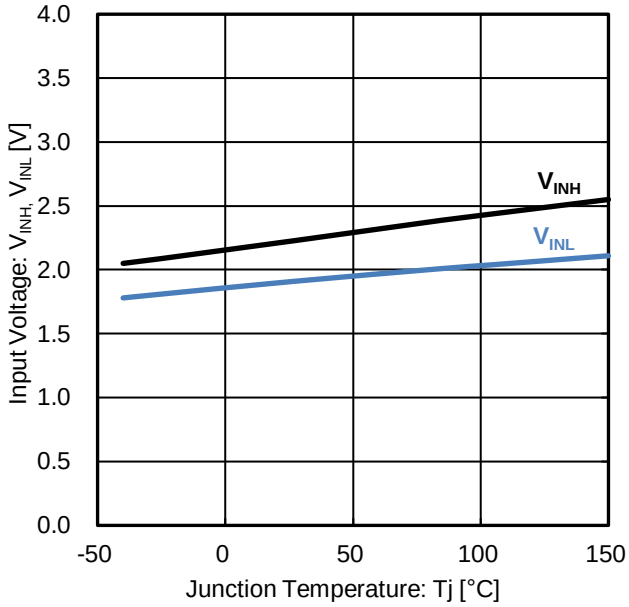

Figure 11. Input Voltage vs Junction Temperature

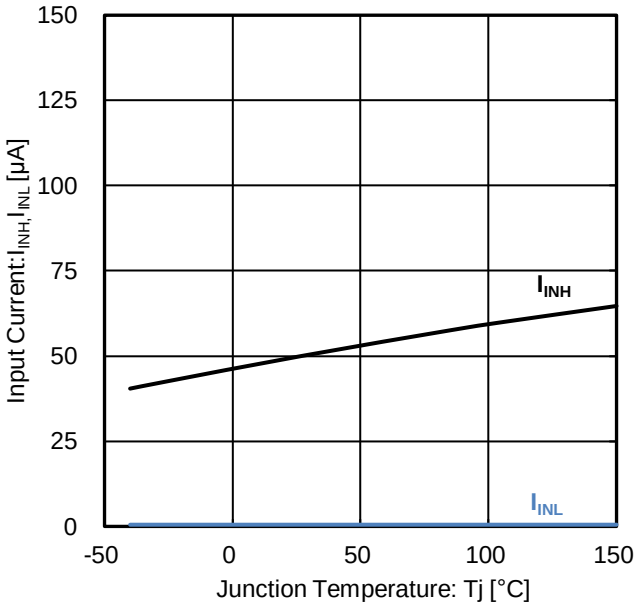

Figure 12. Input Current vs Junction Temperature

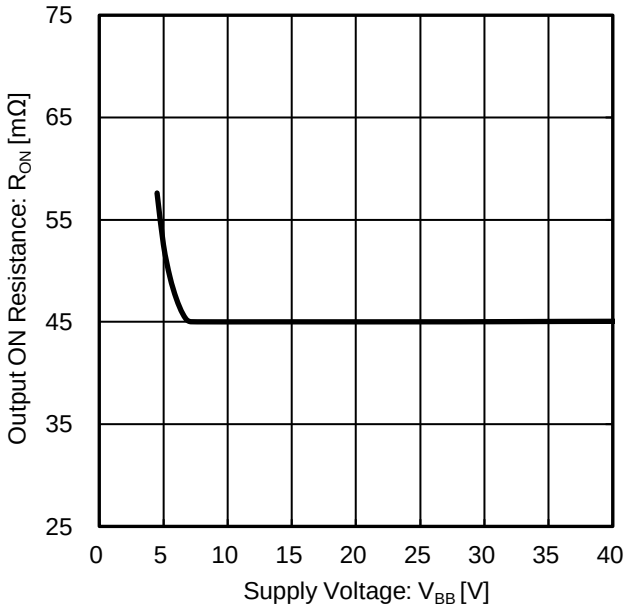

Figure 13. Output ON Resistance vs Supply Voltage

© 2019 ROHM Co., Ltd. All rights reserved.

Typical Performance Curves - continued
(Unless otherwise specified V_{BB} = 14 V, V_{IN1} = V_{IN2} = 5 V, Tj = 25 °C)

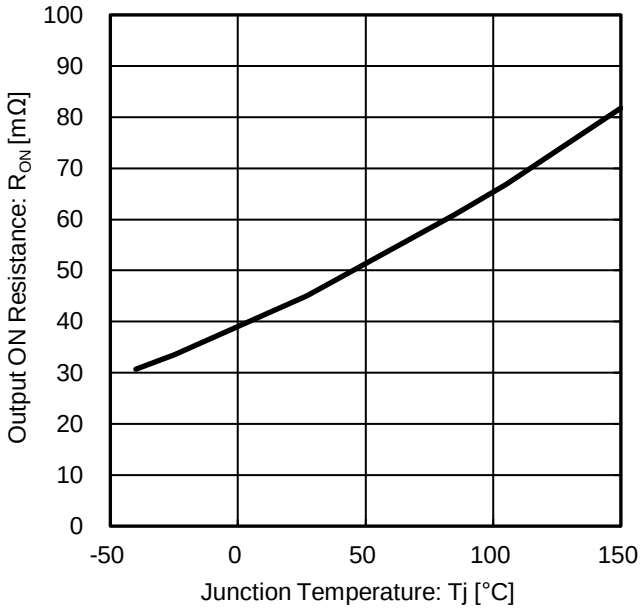

Figure 14. Output ON Resistance vs Junction Temperature

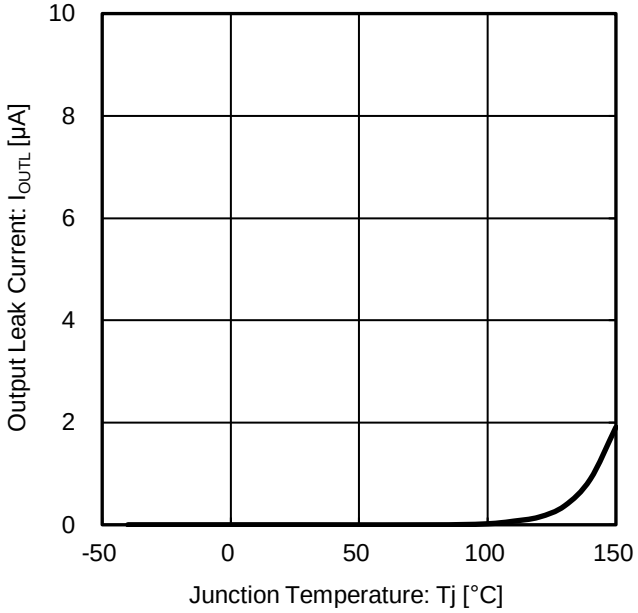

Figure 15. Output leak Current vs Junction Temperature

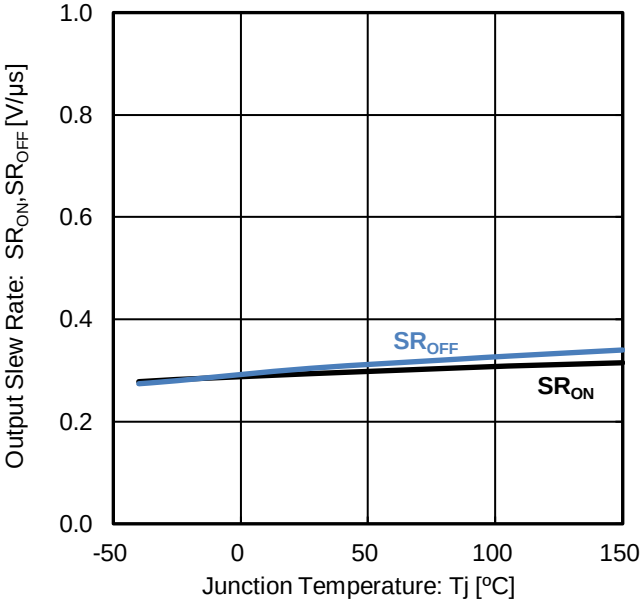

Figure 16. Output Slew Rate vs Junction Temperature

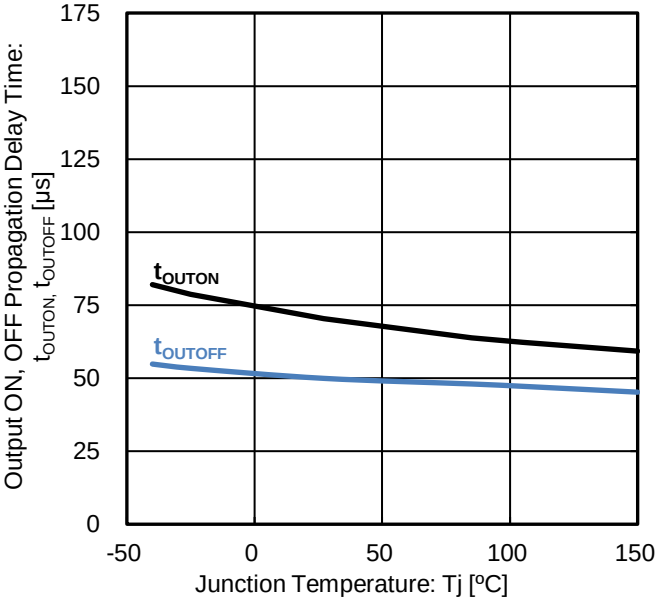

Figure 17. Output ON, OFF Propagation Delay Time vs Junction Temperature

© 2019 ROHM Co., Ltd. All rights reserved.

Typical Performance Curves - continued
(Unless otherwise specified V_{BB} = 14 V, V_{IN1} = V_{IN2} = 5 V, Tj = 25 °C)

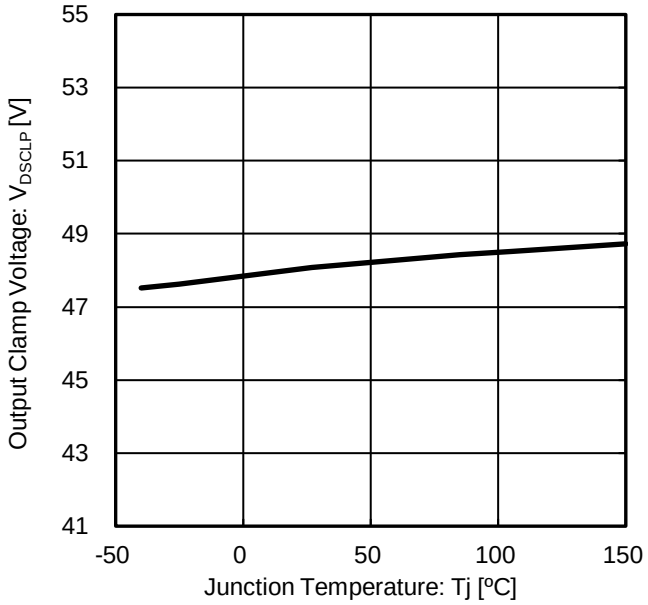

Figure 18. Output Clamp Voltage vs Junction Temperature

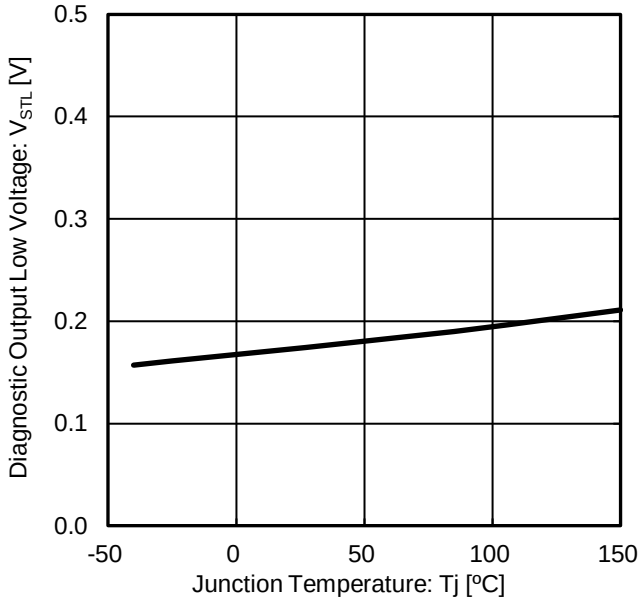

Figure 19. Diagnostic Output Low Voltage vs Junction Temperature

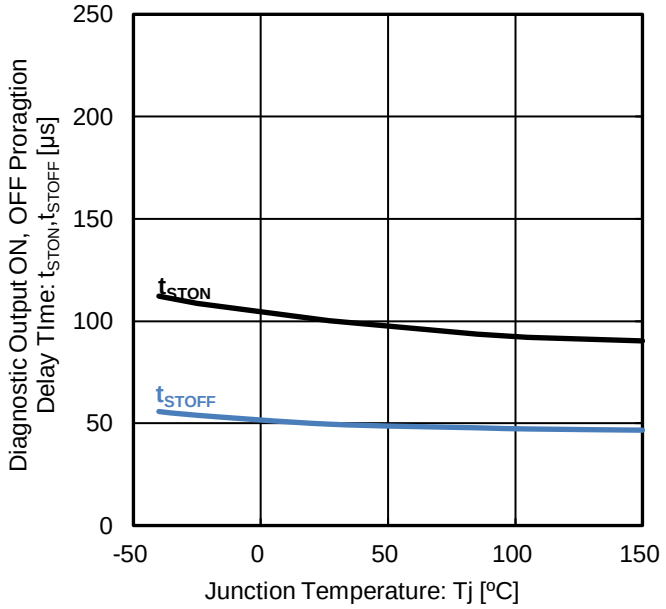

Figure 20. Diagnostic Output ON, OFF Propagation Delay Time vs Junction Temperature

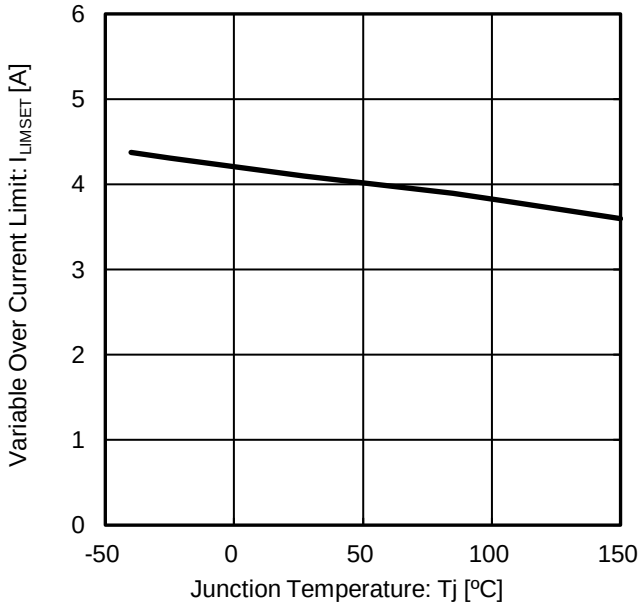

Figure 21. Variable Over Current Limit vs Junction Temperature

© 2019 ROHM Co., Ltd. All rights reserved.

Typical Performance Curves - continued
(Unless otherwise specified V_{BB} = 14 V, V_{IN1} = V_{IN2} = 5 V, Tj = 25 °C)

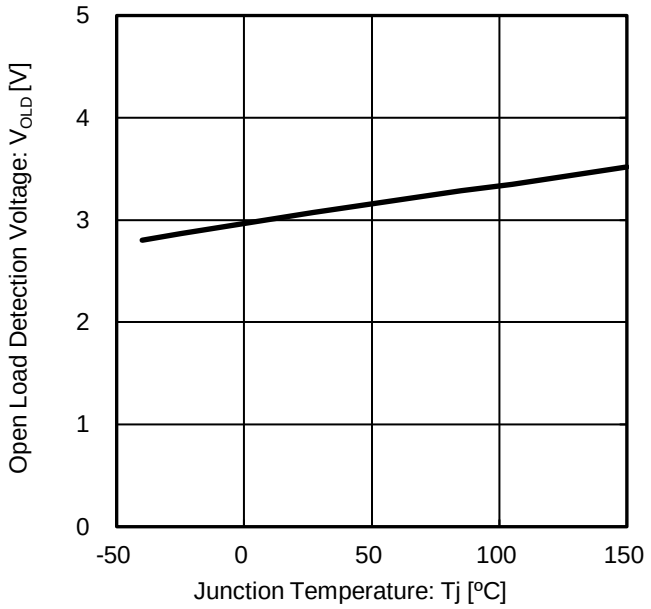

Figure 22. Open Load Detection Voltage vs Junction Temperature

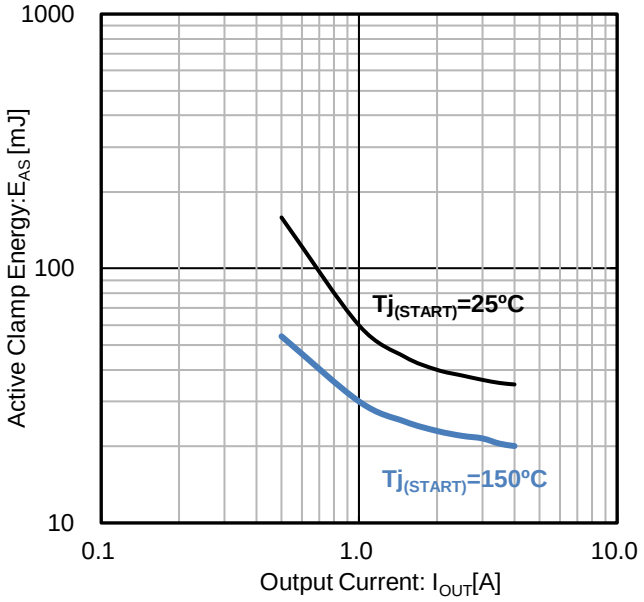

Figure 23. Active Clamp Energy vs Output Current

© 2019 ROHM Co., Ltd. All rights reserved.

Measurement Circuit

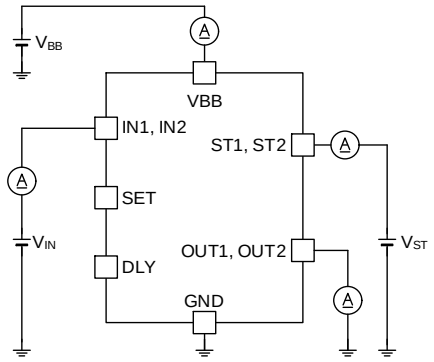

Figure 24. Standby Current
Low-Level Input Current
Output Leak Current
Diagnostic Output Leak Current

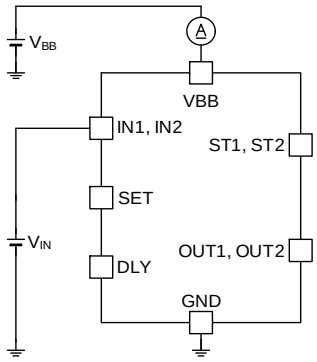

Figure 25.Operating Current

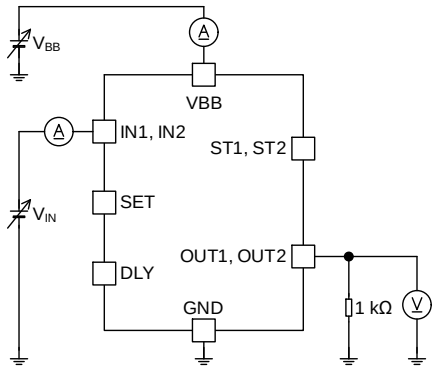

Figure 26. UVLO Detection Voltage
UVLO Hysteresis Voltage
High-Level Input Voltage
Low-Level Input Voltage
Input Voltage Hysteresis
High-Level Input Current
Thermal Shutdown
Thermal Shutdown Hysteresis

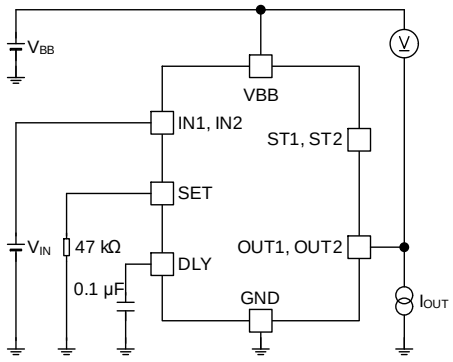

Figure 27. Output ON Resistance
Output Clamp Voltage

© 2019 ROHM Co., Ltd. All rights reserved.

Measurement Circuit - continued

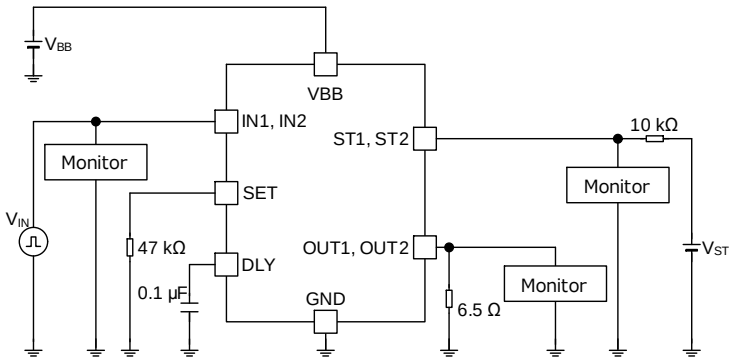

Figure 28. Output ON Slew Rate
Output OFF Slew Rate
Output ON Propagation Delay Time
Output OFF Propagation Delay Time
Diagnostic Output ON Propagation Delay Time
Diagnostic Output OFF Propagation Delay Time

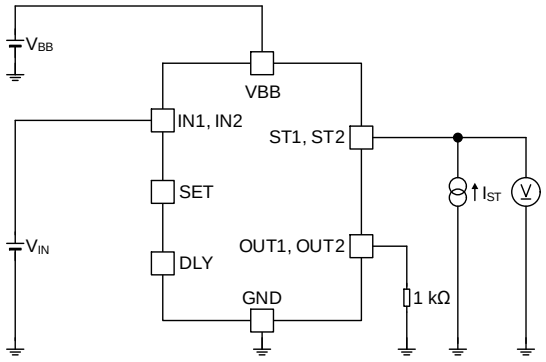

Figure 29. Diagnostic Output Low Voltage

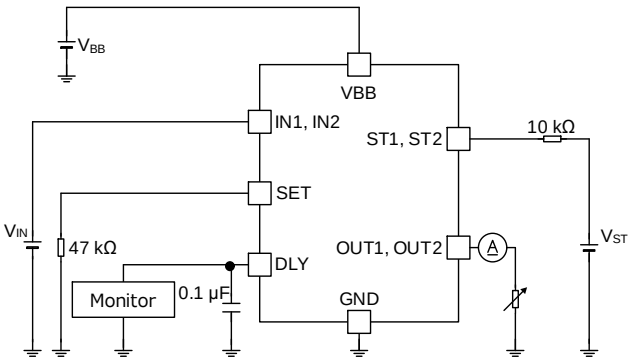

Figure 30. Fixed Over Current Limit
Variable Over Current Limit

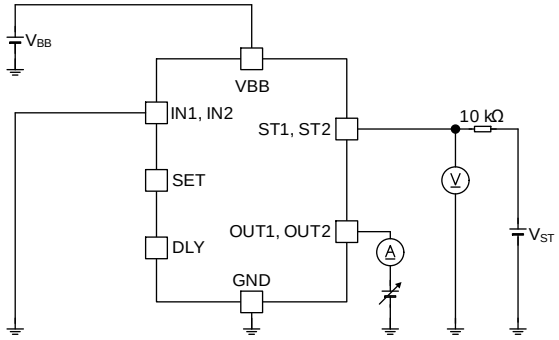

Figure 31. Open Load Detection Voltage
Open Load Detection Sink Current

© 2019 ROHM Co., Ltd. All rights reserved.

Timing Chart (Propagation Delay Time)

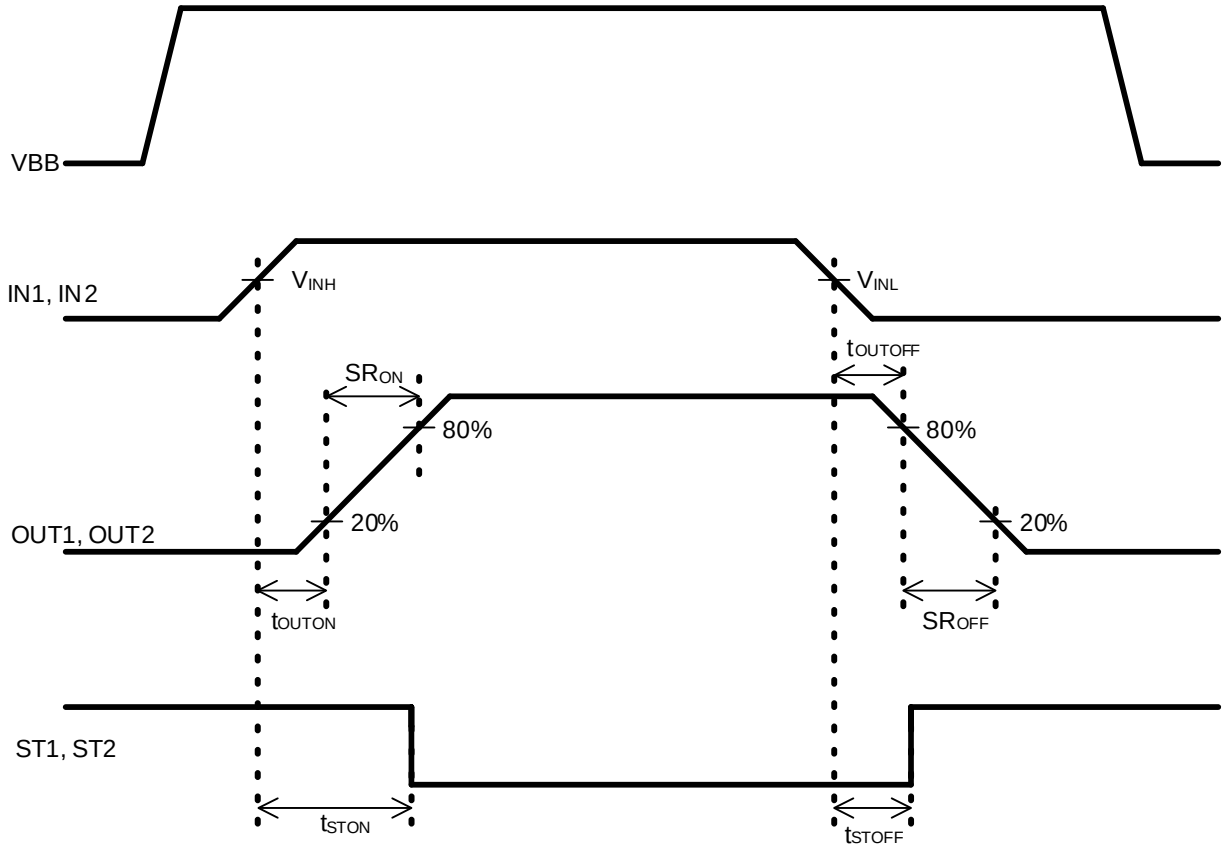

Figure 32. Timing Chart

© 2019 ROHM Co., Ltd. All rights reserved.

Function Description

1. Protection Function

Table 1. Detection and Release Conditions of Each Protection Function and Diagnostic Output

Mode		Conditions	IN1, IN2	ST1, ST2
Normal Condition	Standby	-	Low	High
	Operating	-	High	Low
Open Load Detect (OLD)		Detect V_{OUT} ≥ 3.0 V (Typ)	Low	Low
		Release V_{OUT} ≤ 2.6 V (Typ)	Low	High
Low Voltage Output OFF (UVLO)		Detect V_{BB} ≤ 4.3 V (Max)	High	High
		Release V_{BB} ≥ 4.7 V (Max)	High	Low
Thermal Shutdown (TSD)*(Note 1)*		Detect Tj ≥ 175 °C (Typ)	High	High
		Latch Release Tj ≤ 160 °C (Typ)	Low	High
ΔTj Protection*(Note 2)*		Detect ΔTj ≥ 120 °C (Typ)	High	High
		Release ΔTj ≤ 80 °C (Typ)	High	Low
Over Current Protection (OCP)		Detect I_{OUT} ≥ I_{LIMSET}	High	High
		Release I_{OUT} < I_{LIMSET}	High	Low

(Note 1) When thermal shutdown is detected, output is turned OFF and latch. Latch is released when input (IN1, IN2) of TSD detected channel becomes Low.
(Note 2) Protect function by detecting PowerMOS sharp increase of temperature difference with control circuit.

© 2019 ROHM Co., Ltd. All rights reserved.

Function Description – continued

2. Over Current Protection

2.1 Over Current Limiting Operation in one side channel

This IC has two over current limiting functions, fixed over current limit (I_{LIMH}) for protecting the IC and variable over current limit (I_{LIMSET}) for protecting the load. The variable over current limit (I_{LIMSET}) can be set by connecting an external resistor to the SET pin. It is also possible to set the variable over current mask time (t_{DLY}) by connecting an external capacitor to the DLY pin.

Timing chart for switching from fixed over current setting (I_{LIMH}) to variable over current limit (I_{LIMSET}) are shown at Figure 33.

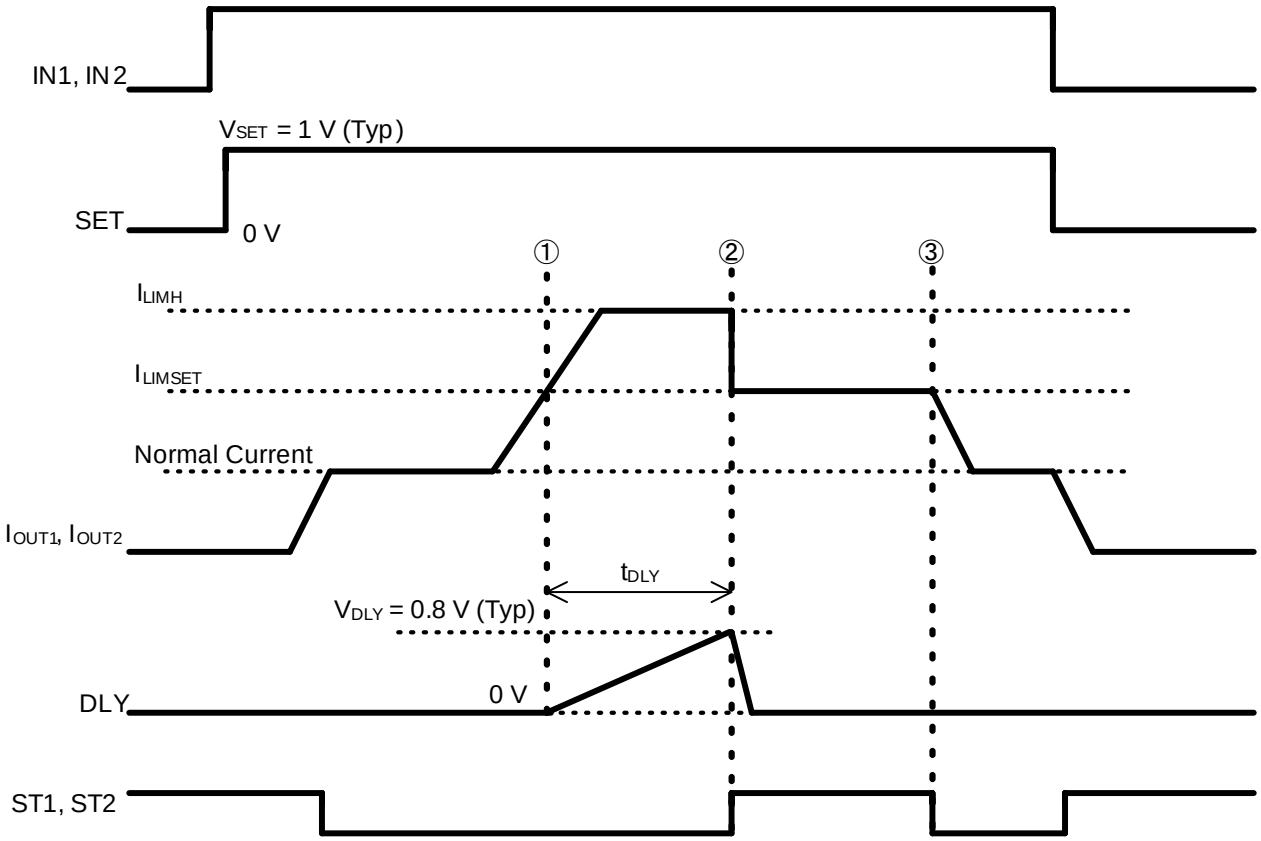

Figure 33. Over Current Detection in One Side Channel Timing Chart

① When the load current (I_{OUT1}, I_{OUT2}) rises and exceeds variable over current limit (I_{LIMSET}), external capacitor C_{DLY} is charged by 5 µA (Typ).

② When the DLY pin voltage V_{DLY} reaches 0.8 V (Typ) (after t_{DLY}), C_{DLY} is discharged. I_{OUT1}, I_{OUT2} is limited to variable over current limit value (I_{LIMSET}) and ST1, ST2 = High indicating an abnormal condition.

③ When output current I_{OUT1}, I_{OUT2} becomes less than the variable over current limit value ($_{LIMSET}$), the diagnostic output pin (ST1, ST2) is turned to low.

© 2019 ROHM Co., Ltd. All rights reserved.

Function Description – continued

2.2 Over Current Detection in Both Outputs

This IC can detect over current in both outputs OUT1 and OUT2 independently and limit I_{OUT1} and I_{OUT2} respectively. Variable current limit value (I_{LIMSET}) and variable over current mask time (t_{DLY}) set by external components of the SET pin and the DLY pin are the same for OUT1 and OUT2.

Figure 34 shows the timing chart when over current are detected at both outputs.

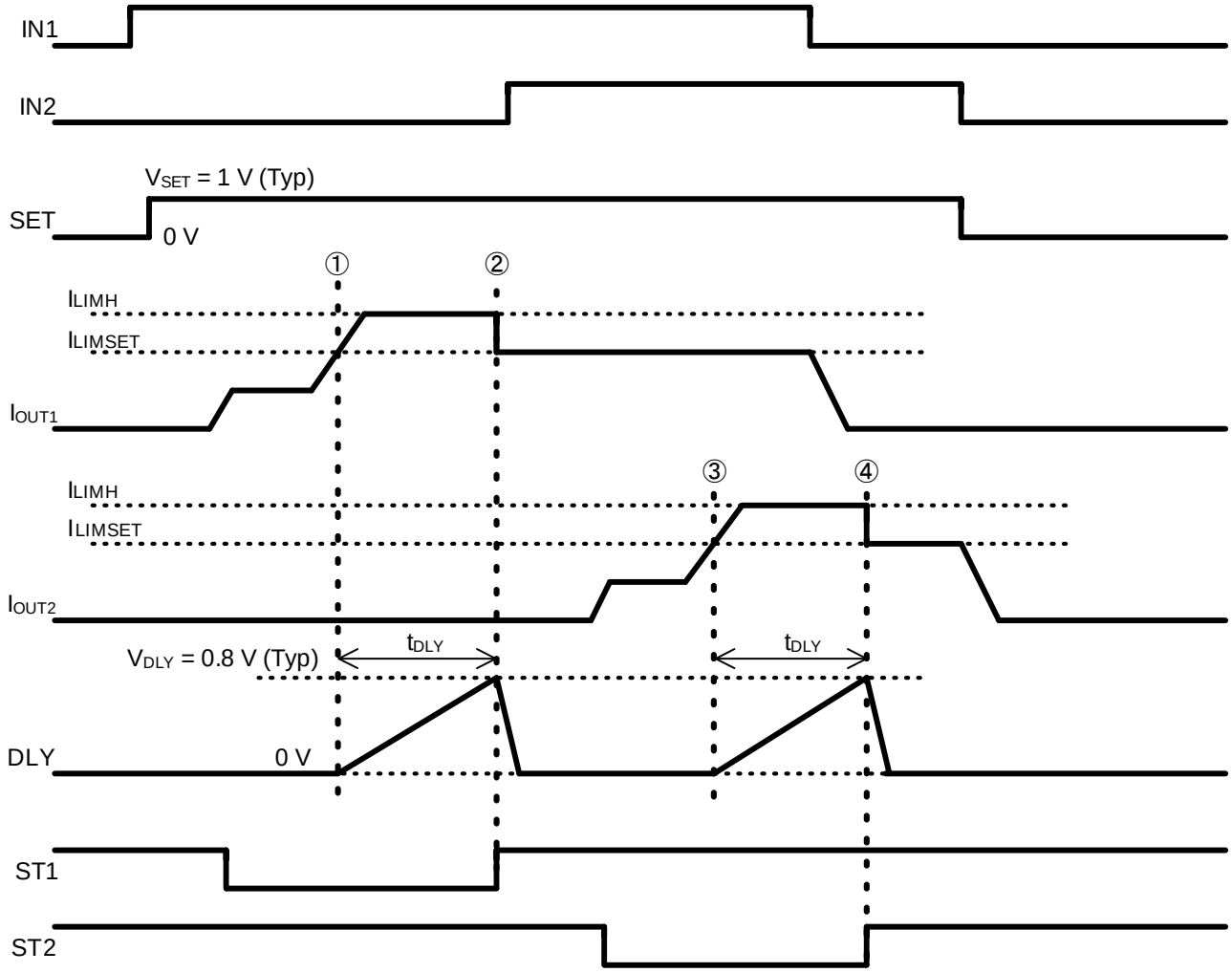

Figure 34. Timing Chart for Over Current Detection in Both Outputs

① When load current (I_{OUT1}) of channel 1 rises and exceeds variable over current limit (I_{LIMSET}), external capacitor C_{DLY} is charged by 5 µA (Typ).

② When DLY pin voltage V_{DLY} reaches 0.8 V (Typ) (after t_{DLY}), C_{DLY} is discharged. I_{OUT1} is limited to variable over current limit value (I_{LIMSET}) and ST1 = High indicating an abnormal condition.

③ When load current (I_{OUT2}) of channel 2 rises and exceeds variable over current limit (I_{LIMSET}), external capacitor C_{DLY} is charged by 5 µA (Typ).

④ When V_{DLY} = 0.8 V (Typ) (after t_{DLY}), C_{DLY} is discharged. I_{OUT2} is limited to variable over current limit value (I_{LIMSET}) and ST2 = High indicating an abnormal condition.

© 2019 ROHM Co., Ltd. All rights reserved.

Function Description – continued

2.3 Over Current Detection by Other Channel while C_{DLY} is Charging (t_{DLY})

When one side channel is detected over current detection, C_{DLY} is charged. When the other channel detects over current while C_{DLY} is charged, it is charged again after t_{DLY} and C_{DLY} is discharged. After t_{DLY} has passed again since charging is started, the other channel is limited to the variable over current limit value (I_{LIMSET}). In this case, the variable over current mask time of the channel which detected later is maximum $2t_{DLY} + t_{DISC}$.

Figure 35 shows the timing chart.

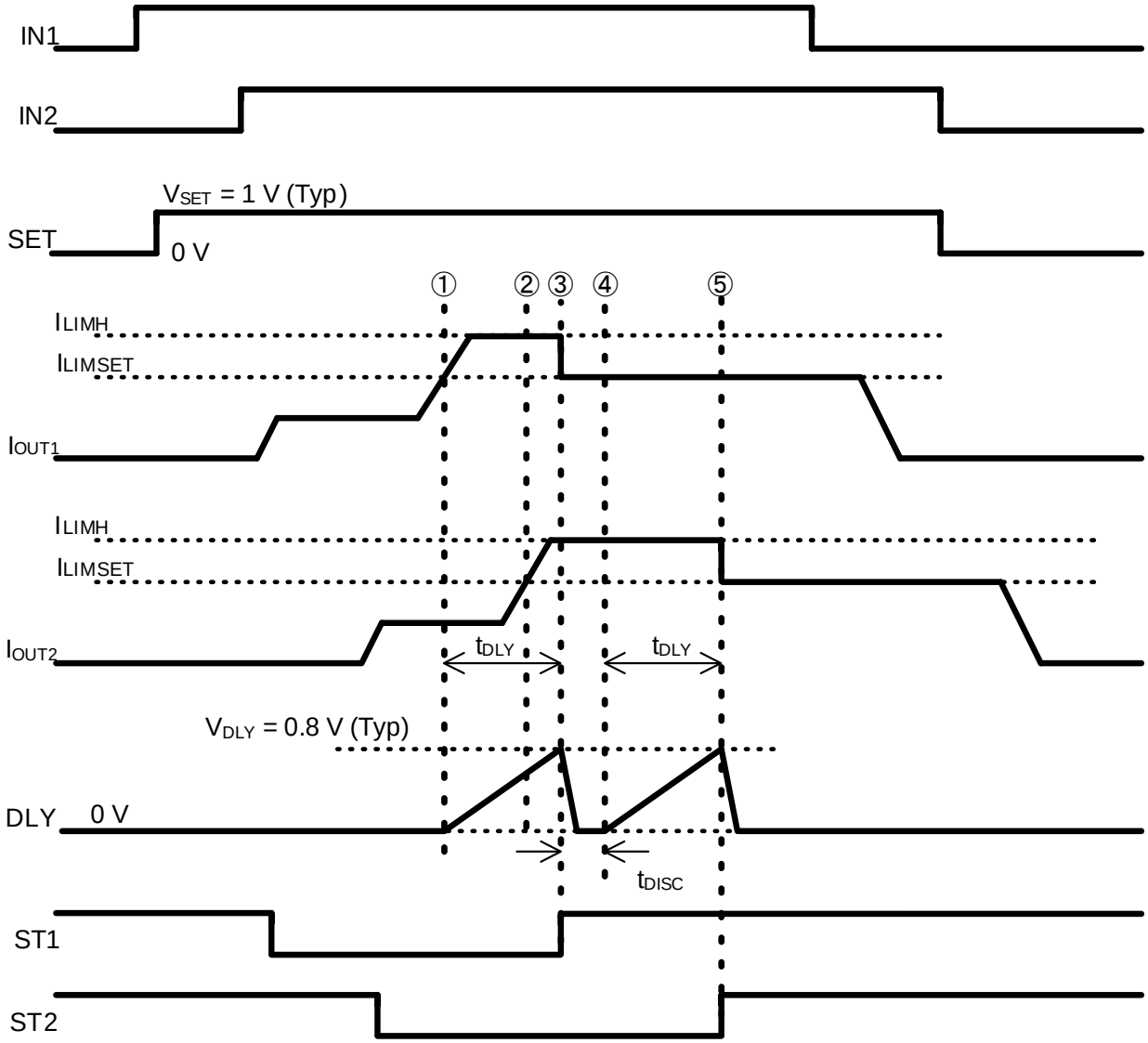

Figure 35. Timing Chart for Over Current Detected by Other Channel during C_{DLY} Charging (t_{DLY})

① When load current (I_{OUT1}) of channel 1 rises and exceeds variable over current limit (I_{LIMSET}), external capacitor C_{DLY} is charged by 5 µA (Typ).

② While C_{DLY} is charging, load current (I_{OUT2}) of channel 2 rises and exceeds variable over current limit (I_{LIMSET})

③ When the DLY pin voltage V_{DLY} reaches 0.8 V (Typ) (after t_{DLY}), C_{DLY} is discharged. I_{OUT1} is limited to variable over current limit value (I_{LIMSET}) and ST1 = High indicating an abnormal condition.

④ When I_{OUT2} is continuously maintained at over current detection after the t_{DISC} (0.2 µs Typ) set internally in the IC, the external capacitor C_{DLY} is charged again by 5 µA (Typ).

⑤ When V_{DLY} = 0.8 V (Typ) (after t_{DLY}), C_{DLY} is discharged. I_{OUT2} is limited to variable over current limit value (I_{LIMSET}) and ST2 = High indicating an abnormal condition.

© 2019 ROHM Co., Ltd. All rights reserved.

Function Description – continued

2.4 Setting of Variable Overcurrent Limit Value

There are two values in the over current limit of this IC; fixed over current limit value (I_{LIMH}) and the variable over current limit value (I_{LIMSET}) that can be set by external resistance R_{SET}. The variable over current limit value (I_{LIMSET}) set for the value of R_{SET} is as follows. R_{SET} should be set within the range of 7.5 kΩ to 330 kΩ.

Table 3. Variable Over Current Limit for R_{SET}

R_{SET} [kΩ]	Variable Over Current Limit (I_{LIMSET}) [A]		
	Min	Typ	Max
7.5	7.78	11.39	15.00
10	6.95	10.17	13.39
20	4.82	7.06	9.30
33	3.50	5.13	6.76
47	2.80	4.10	5.40
75	1.98	2.90	3.81
100	1.61	2.36	3.10
150	1.19	1.74	2.29
220	0.78	1.30	1.82
330	0.51	1.01	1.52

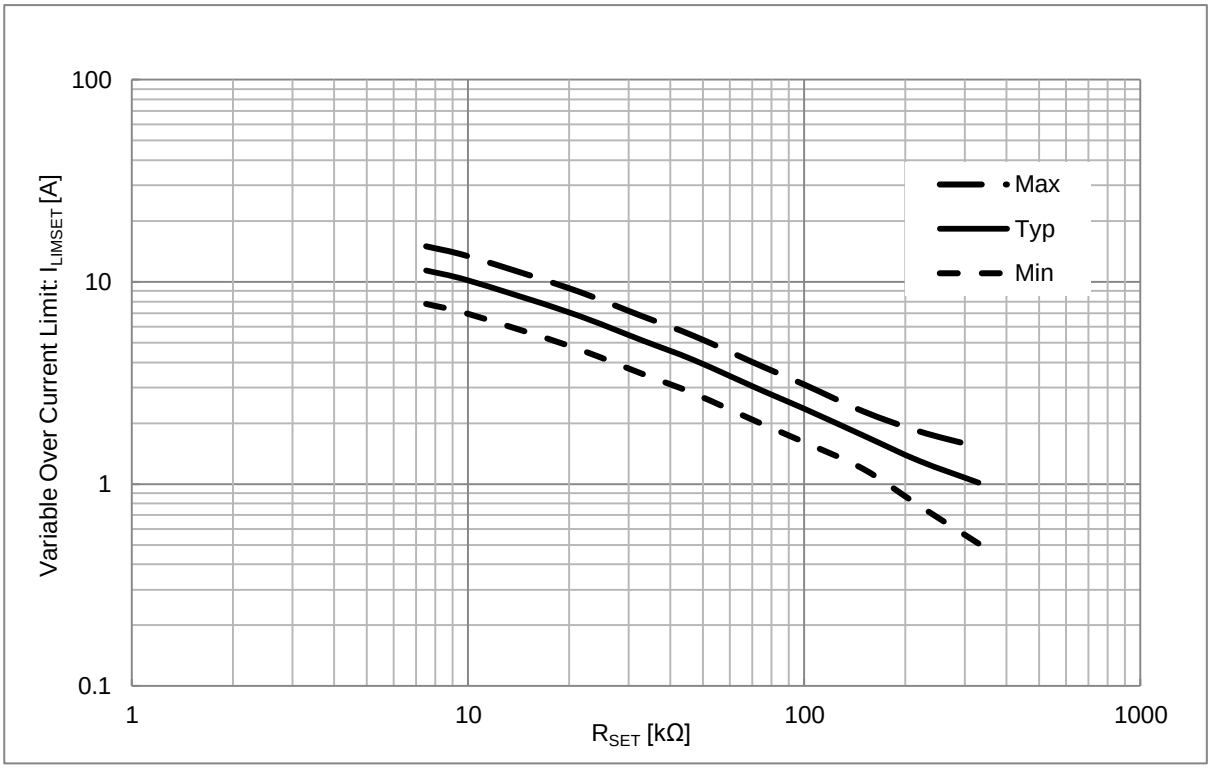

Figure 36. Variable Over Current Limit vs R_{SET}

© 2019 ROHM Co., Ltd. All rights reserved.

Function Description – continued

2.5 Variable Over Current Limit Mask Time Setting

The variable over current mask time (t_{DLY}) can be set by using external capacitor C_{DLY}. t_{DLY} is the switching time from the over current detected timing until the over current limit value (I_{LIMSET}) set by R_{SET}.

The approximate expressions for variable over current mask time (t_{DLY}) are shown below.

$$t_{DLY_Max} = 0.28 \times \frac{C_{DLY}}{10^{-6}} \quad [s]$$

$$t_{DLY_Typ} = 0.20 \times \frac{C_{DLY}}{10^{-6}} \quad [s]$$

$$t_{DLY_Min} = 0.12 \times \frac{C_{DLY}}{10^{-6}} \quad [s]$$

C_{DLY}: External Capacitor Value
t_{DLY}: Variable Over Current Mask Time

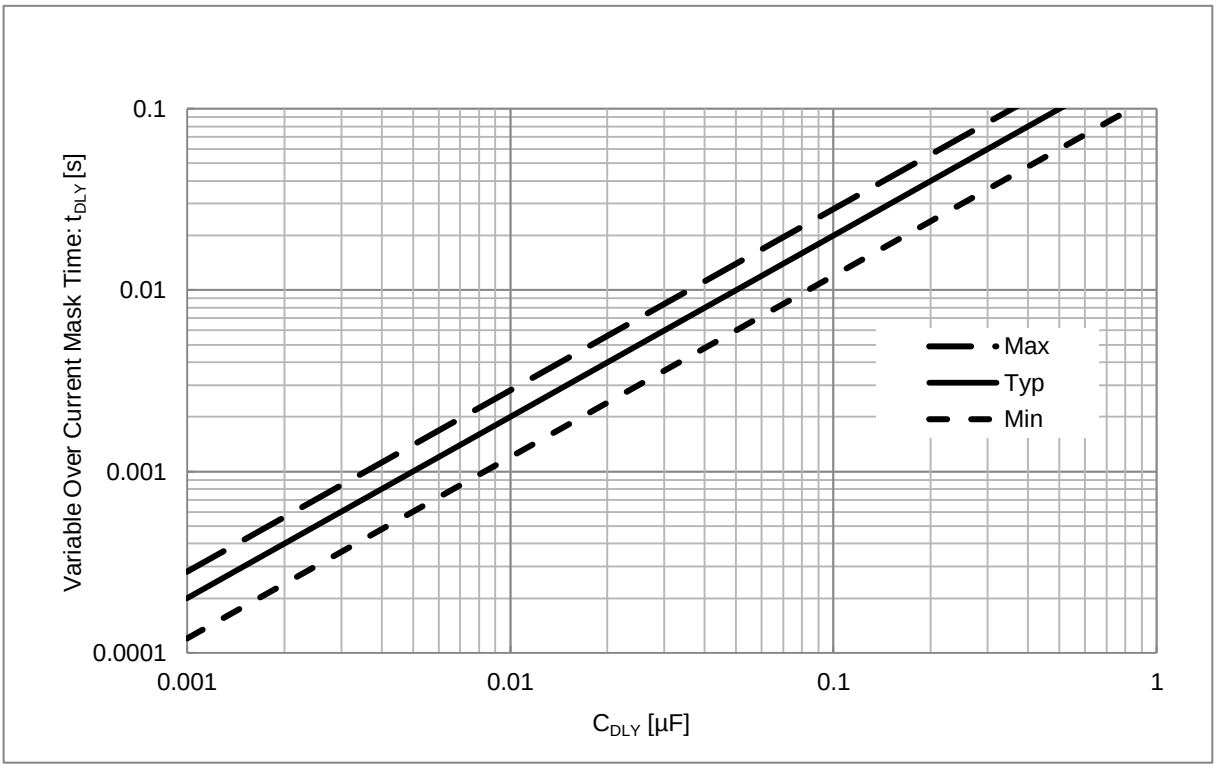

Figure 37. Variable Over Current Mask Time vs C_{DLY}

2.6 The SET Pin and the DLY Pin Setting

The DLY pin can be used by GND short or Open.

DLY = GND: The variable over current limit is disabled and only fixed over current limit is operational.
In this case, please set the SET pin OPEN or connect a resistor with 7.5 kΩ or above.

DLY = OPEN: Variable over current mask time is 10 µs or less.

© 2019 ROHM Co., Ltd. All rights reserved.

Function Description – continued

3. Open Load Detection

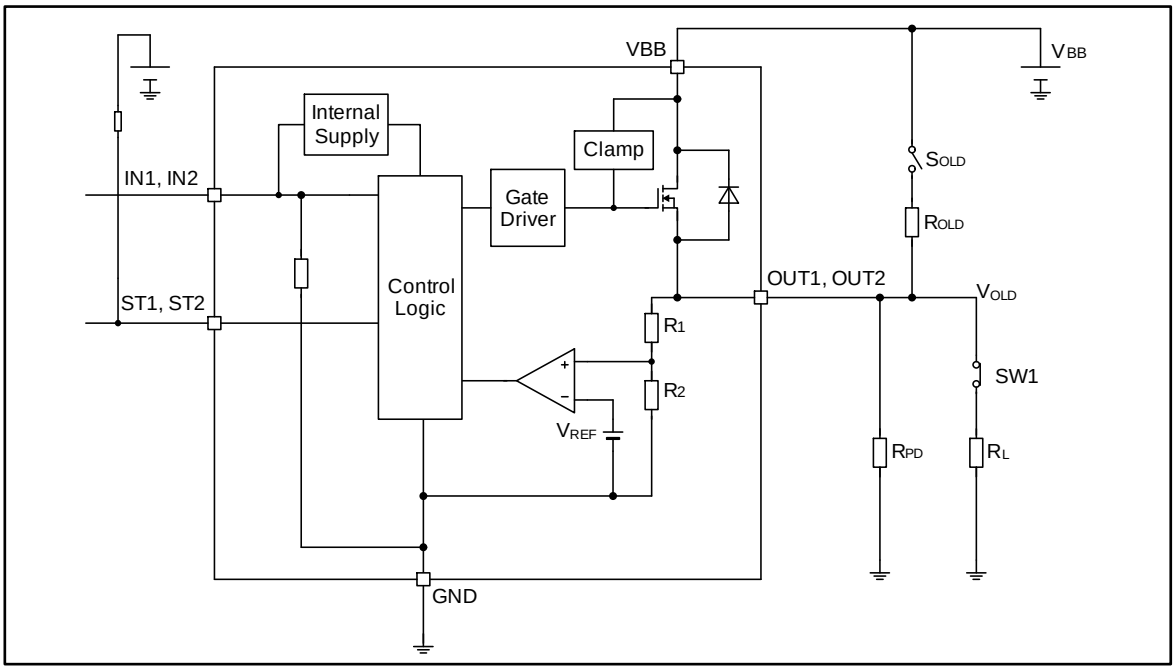

Figure 38. Open Load Detection Block Diagram

Open load can be detected by connecting an external resistance R_{OLD} between power supply V_{BB} and output (the OUT1 pin and the OUT2 pin).
When output load is disconnected during input (the IN1 pin or the IN2 pin) is low, diagnostic output (the ST1 pin or the ST2 pin) is turned to low to indicate abnormality. To reduce the standby current of the system, an open load resistance switch S_{OLD} is recommended.
When the SW1 is OFF (the OUT1 pin and the OUT2 pin no longer pulled down by the load), voltage of the OUT1pin and OUT2 pin does not fall to GND level. Because, when the IN1 pin and the IN2 pin are low, the voltage of the OUT1 pin and OUT2 pin does not become under or equal to the Output ON Detection Voltage (V_{DSDET}). To pulled down the OUT1 pin and the OUT2 pin, pulled down resistance R_{PD} is recommended. The resistance R_{PD} is 4.3 kΩ or less for outflow current from the OUT1 pin and the OUT2 pin.

3.1 When the OUT1, OUT2 is pulled down by the load (Normal function)

The value of external resistance R_{OLD} is decided based on used minimum power supply voltage (V_{BB}), internal resistance R_1 and R_2 and open detection voltage V_{OLD}. External resistance R_{PD} is unnecessary.
The equation for calculating the R_{OLD} value is shown below.

$$R_{OLD} < \frac{V_{BB} \times \left(R_{1(Min)} + R_{2(Min)} \right)}{V_{OLD(\mathrm{Max})}} - \left(R_{1(Min)} + R_{2(Min)} \right) \ [\Omega]$$

The above formula is summarized as follows.

$$R_{OLD} < V_{BB} \times 75 \times 10^3 - 300 \times 10^3 \ [\Omega]$$

R_{OLD} value is fell below the above calculated result.

3.2 If the SW1 is OFF, the output is no longer pulled down by the load

The value of external resistance R_{OLD} is decided based on used minimum power supply voltage (V_{BB}), external resistance R_{PD} and open detection voltage V_{OLD}.
The equation for calculating the R_{OLD} value is shown below.

$$R_{OLD} < \frac{V_{BB} \times R_{PD}}{V_{OLD(\mathrm{Max})}} - R_{PD} \ [\Omega]$$

When R_{PD} is 4.3 kΩ, the above formula is summarized as follows.

$$R_{OLD} < V_{BB} \times 1.075 \times 10^3 - 4.3 \times 10^3 \ [\Omega]$$

R_{OLD} value is fell below the above calculated result.

© 2019 ROHM Co., Ltd. All rights reserved.

Function Description – continued

4. Thermal Shutdown, ΔTj Protection Detection

4.1 Thermal Shutdown Protection

This IC has a built-in thermal shutdown protection function. When the IC temperature is 175 °C (Typ) or more, the output is latched OFF. Diagnostic output (ST1, ST2) outputs High. When the IC temperature becomes 160 °C (Typ) or less, output latch can release by setting IN1, IN2 to Low or by setting VBB voltage fall below voltage lockout detection threshold.

4.2 ΔTj Protection

This IC has a built-in ΔTj protection function that turns OFF the output when the temperature difference (T_{DTJ}) between the POWER-MOS unit ($T_{POWER-MOS}$) and the control unit (T_{AMB}) in the IC is 120 °C (Typ) or more. ΔTj protection also has a built-in hysteresis (T_{DTJHYS}) that returns the output to normal state when the temperature difference becomes 80 °C (Typ) or less.

Figure 39 shows the timing chart of thermal shutdown protection and ΔTj protection during output short to GND fault.

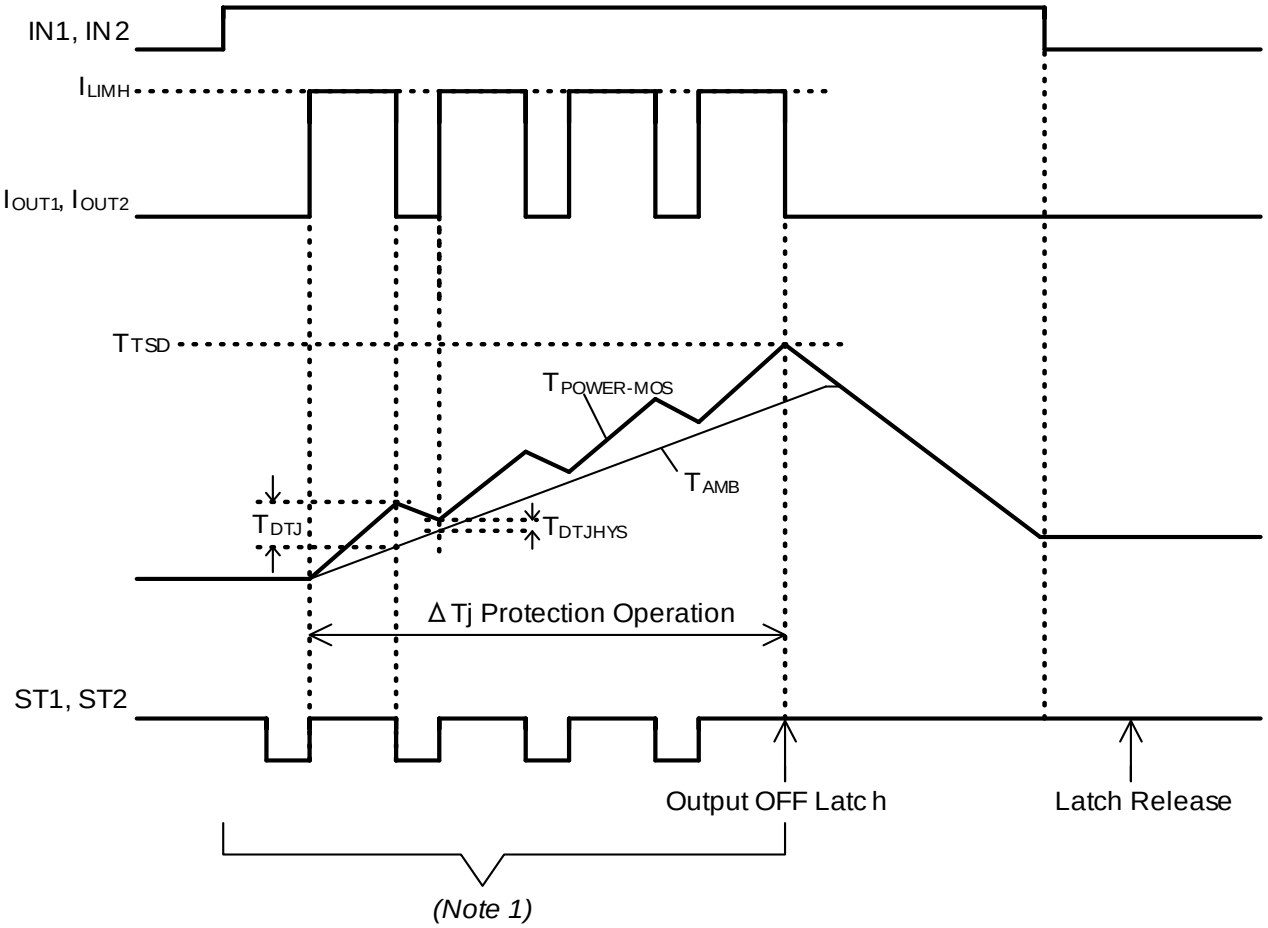

Figure 39. Thermal Shutdown Protection and ΔTj Protection Timing Chart

(Note 1) When output voltage falls to output ON detection voltage (V_{DSDET}) or less at the output to GND is shorted or rare short, IC is judged that the output voltage is abnormal. Hence, ST1, ST2 may not be able to turn low.

© 2019 ROHM Co., Ltd. All rights reserved.

Function Description – continued

5. Other Protection

5.1 GND Open Protection

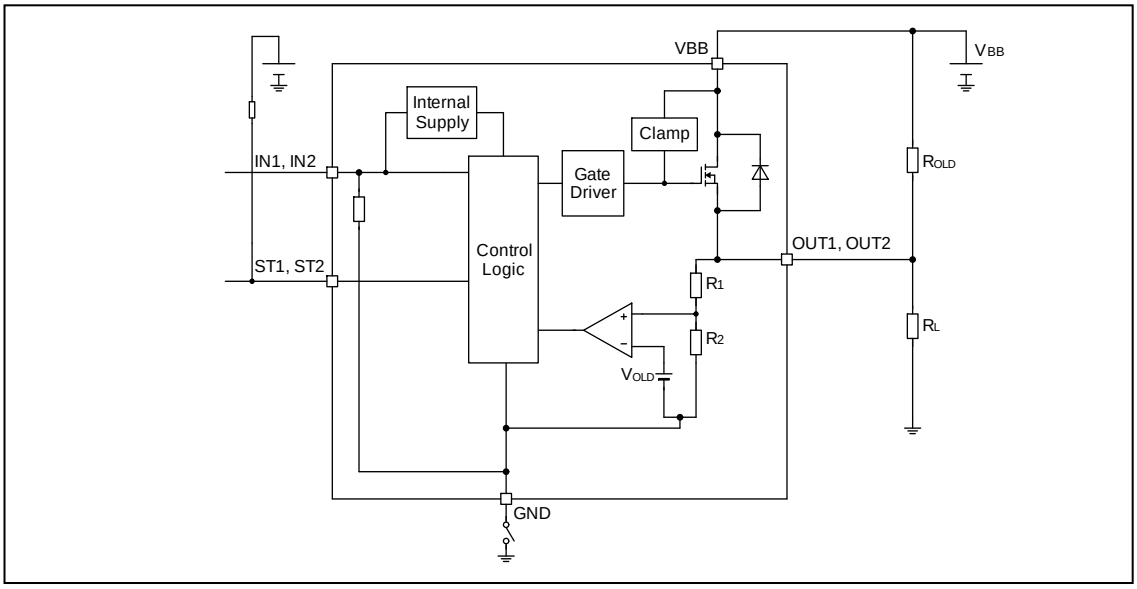

Figure 40. GND Open Protection Block Diagram

When the GND of the IC is open, the output switches OFF regardless of IN1, IN2 voltage.
(However, the self-diagnosis output ST1, ST2 is invalid.)
When an inductive load is connected, active clamp operates when the GND pin becomes open.

5.2 MCU I/O Protection

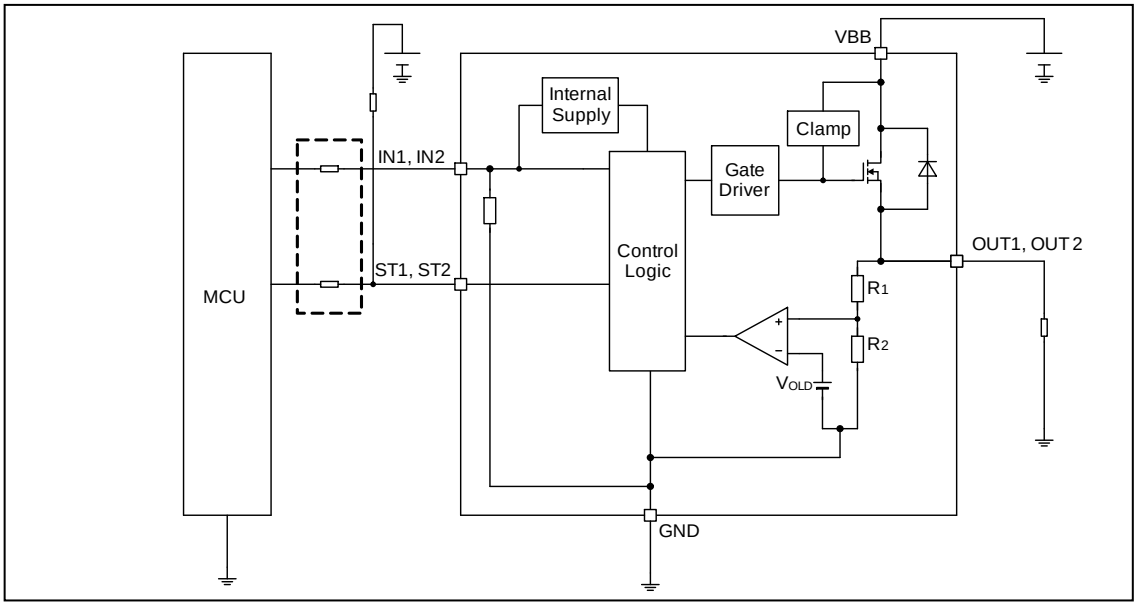

Figure 41. MCU I/O Protection

Negative surge voltage to the IN1 pin, the IN2 pin, the ST1 pin and the ST2 pin may cause damage to the MCU's I/O pins. In order to prevent those damages, it is recommended to insert limiting resistors between IC pins and MCU.

© 2019 ROHM Co., Ltd. All rights reserved.

Applications Example

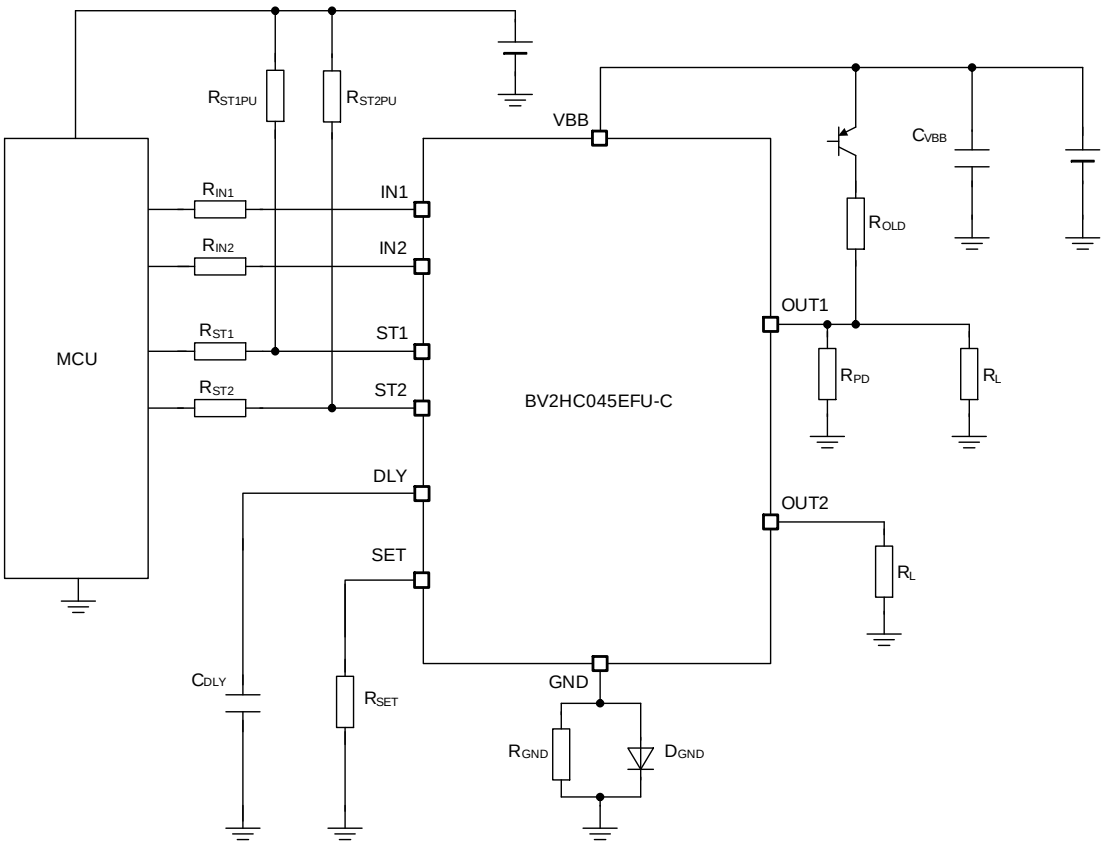

Symbol	Value	Purpose
R_{IN1}, R_{IN2}	4.7 kΩ	Limit resistance for negative surge
R_{ST1}, R_{ST2}	4.7 kΩ	Limit resistance for negative surge
R_{ST1PU}, R_{ST2PU}	10 kΩ	Pull up ST1 / ST2 pin to MCU power supply, these pins are open drain output
R_{SET}	47 kΩ	For variable over current limit value
C_{VBB}	10 µF	For battery line voltage spike filter
C_{DLY}	0.1 µF	For variable over current mask time
R_{GND}	1 kΩ	For current limit for reverse battery connection
D_{GND}	-	BV2HC045EFU-C protection for reverse battery connection
R_{PD}	4.3 kΩ	For output pulled down
R_{OLD}	2 kΩ	For open load detection

© 2019 ROHM Co., Ltd. All rights reserved.

I/O Equivalence Circuits

SET	DLY
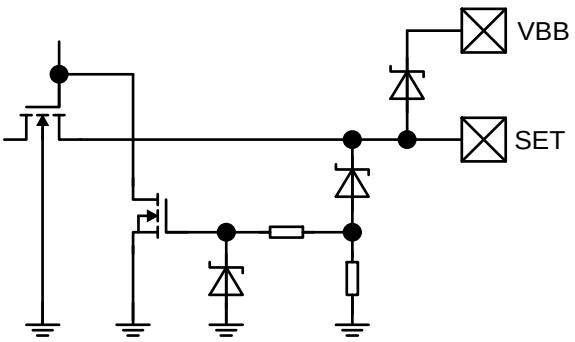	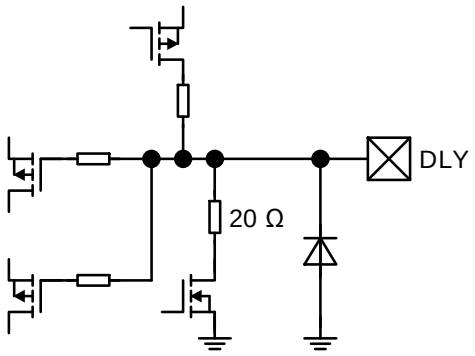
IN1, IN2	**ST1, ST2**
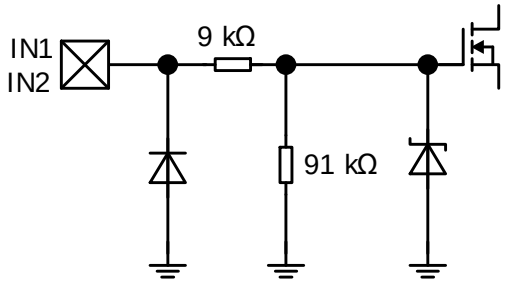	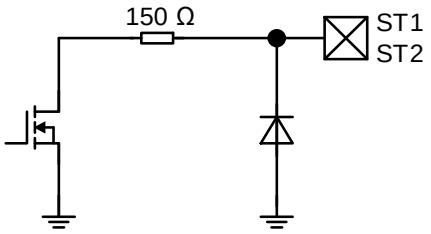
OUT1, OUT2	
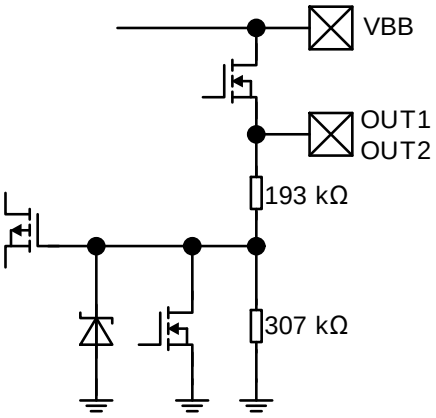	

Resistance values shown in the diagrams above are typical values.

© 2019 ROHM Co., Ltd. All rights reserved.

Operational Notes

1. **Reverse Connection of Power Supply**
   Connecting the power supply in reverse polarity can damage the IC. Take precautions against reverse polarity when connecting the power supply, such as mounting an external diode between the power supply and the IC's power supply pins.

2. **Power Supply Lines**
   Design the PCB layout pattern to provide low impedance supply lines. Furthermore, connect a capacitor to ground at all power supply pins. Consider the effect of temperature and aging on the capacitance value when using electrolytic capacitors.

3. **Ground Voltage**
   Except for pins the output and the input of which were designed to go below ground, ensure that no pins are at a voltage below that of the ground pin at any time, even during transient condition.

4. **Ground Wiring Pattern**
   When using both small-signal and large-current ground traces, the two ground traces should be routed separately but connected to a single ground at the reference point of the application board to avoid fluctuations in the small-signal ground caused by large currents. Also ensure that the ground traces of external components do not cause variations on the ground voltage. The ground lines must be as short and thick as possible to reduce line impedance.

5. **Recommended Operating Conditions**
   The function and operation of the IC are guaranteed within the range specified by the recommended operating conditions. The characteristic values are guaranteed only under the conditions of each item specified by the electrical characteristics.

6. **Inrush Current**
   When power is first supplied to the IC, it is possible that the internal logic may be unstable and inrush current may flow instantaneously due to the internal powering sequence and delays, especially if the IC has more than one power supply. Therefore, give special consideration to power coupling capacitance, power wiring, width of ground wiring, and routing of connections.

7. **Testing on Application Boards**
   When testing the IC on an application board, connecting a capacitor directly to a low-impedance output pin may subject the IC to stress. Always discharge capacitors completely after each process or step. The IC's power supply should always be turned off completely before connecting or removing it from the test setup during the inspection process. To prevent damage from static discharge, ground the IC during assembly and use similar precautions during transport and storage.

8. **Inter-pin Short and Mounting Errors**
   Ensure that the direction and position are correct when mounting the IC on the PCB. Incorrect mounting may result in damaging the IC. Avoid nearby pins being shorted to each other especially to ground, power supply and output pin. Inter-pin shorts could be due to many reasons such as metal particles, water droplets (in very humid environment) and unintentional solder bridge deposited in between pins during assembly to name a few.

9. **Unused Input Pins**
   Input pins of an IC are often connected to the gate of a MOS transistor. The gate has extremely high impedance and extremely low capacitance. If left unconnected, the electric field from the outside can easily charge it. The small charge acquired in this way is enough to produce a significant effect on the conduction through the transistor and cause unexpected operation of the IC. So unless otherwise specified, unused input pins should be connected to the power supply or ground line.

10. **Ceramic Capacitor**
    When using a ceramic capacitor, determine a capacitance value considering the change of capacitance with temperature and the decrease in nominal capacitance due to DC bias and others.

11. **Thermal Shutdown Function (TSD)**
    This IC has a built-in thermal shutdown function that prevents heat damage to the IC. Normal operation should always be within the IC's maximum junction temperature rating. If however the rating is exceeded for a continued period, the junction temperature (Tj) will rise which will activate the TSD function that will turn OFF power output pins. The IC should be powered down and turned ON again to resume normal operation because the TSD function keeps the outputs at the OFF state even if the Tj falls below the TSD threshold.
    Note that the TSD function operates in a situation that exceeds the absolute maximum ratings and therefore, under no circumstances, should the TSD function be used in a set design or for any purpose other than protecting the IC from heat damage.

© 2019 ROHM Co., Ltd. All rights reserved.

Operational Notes – continued

12. Over Current Protection Function (OCP)
This IC incorporates an integrated overcurrent protection function that is activated when the load is shorted. This protection function is effective in preventing damage due to sudden and unexpected incidents. However, the IC should not be used in applications characterized by continuous operation or transitioning of the protection function.

13. Active Clamp Operation
The IC integrates the active clamp function to internally absorb the reverse energy which is generated when the inductive load is turned off. When the active clamp operates, the thermal shutdown function does not work. Decide a load so that the reverse energy is active clamp tolerance (refer to Figure 23. Active Clamp Energy vs Output Current) or under when inductive load is used.

14. Open Power Supply Pin
When the power supply pin (VBB) becomes open at ON (IN = High), the output is switched to OFF regardless of input voltage. If an inductive load is connected, the active clamp operates when VBB is open and becomes the same potential as that on the ground. At this time, the output voltage drops down to -48 V (Typ).

15. Open GND Pin
When the GND pin becomes open at ON (IN = High), the output is switched to OFF regardless of input voltage. If an inductive load is connected, the active clamp operates when the GND pin is open.

© 2019 ROHM Co., Ltd. All rights reserved.

Ordering Information

B V 2 H C 0 4 5 E F U - C E2

Package
EFU: HSSOP-C16

Product Rank
C: Automotive product

Packaging and Forming Specification
E2: Embossed tape and reel

Marking Diagram

HSSOP-C16 (TOP VIEW)

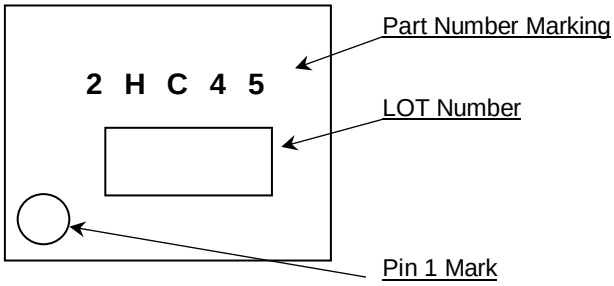

© 2019 ROHM Co., Ltd. All rights reserved.

Physical Dimension and Packing Information

Package Name	HSSOP-C16

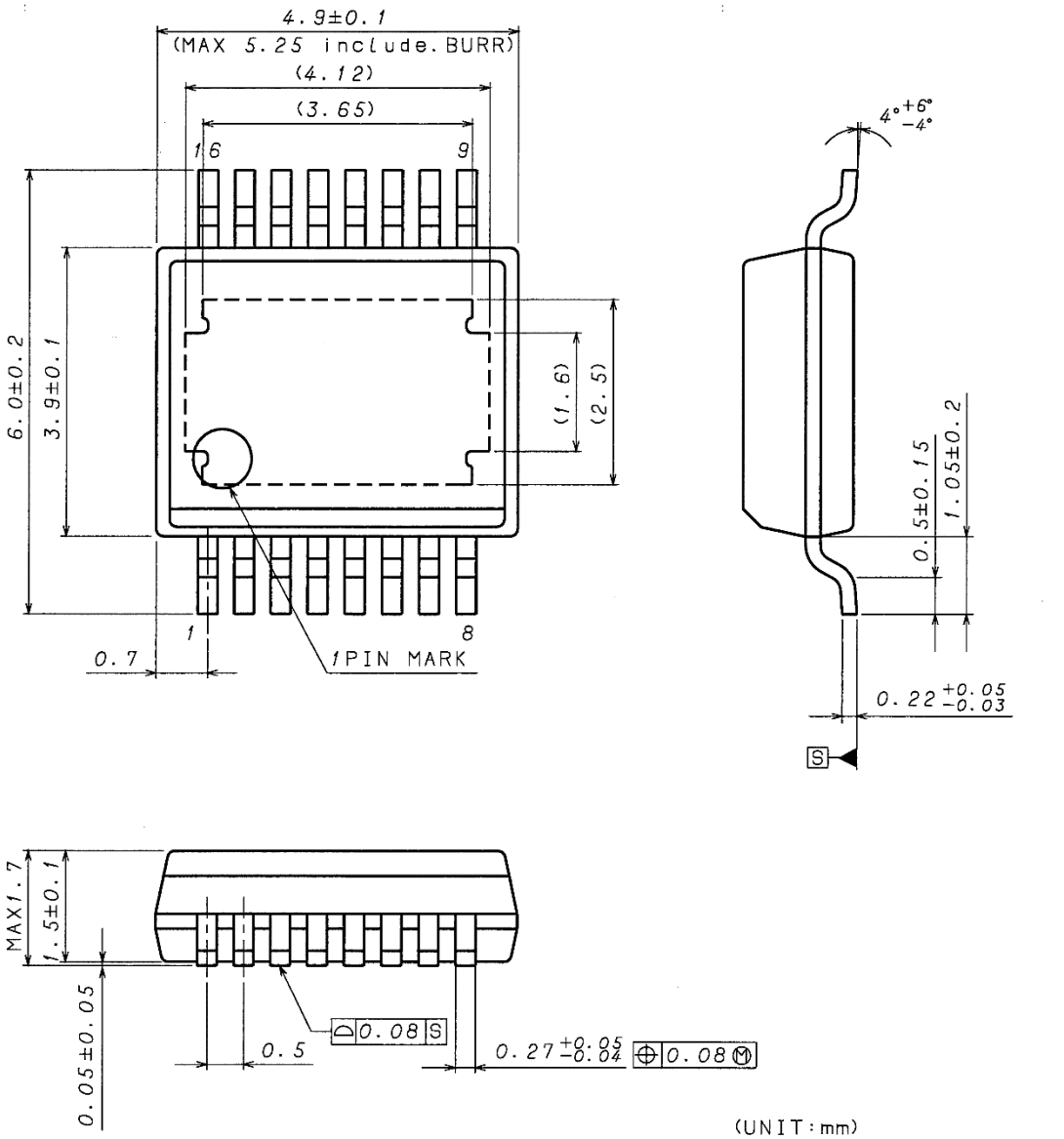

< Tape and Reel Information >

Tape	Embossed carrier tape
Quantity	2500pcs
Direction of feed	E2 The direction is the pin 1 of product is at the upper left when you hold reel on the left hand and you pull out the tape on the right hand

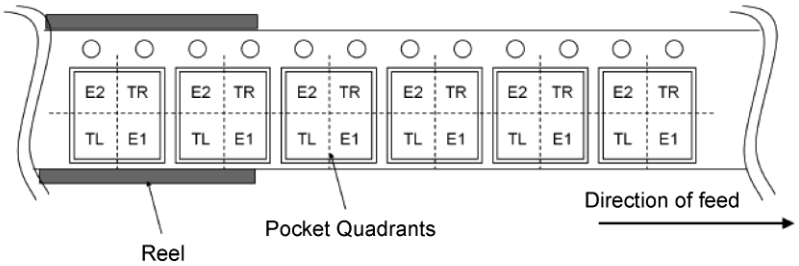

© 2019 ROHM Co., Ltd. All rights reserved.

Revision History

Date	Revision	Changes
15.Mar.2019	001	New Release

© 2019 ROHM Co., Ltd. All rights reserved.

Notice

Precaution on using ROHM Products

1. If you intend to use our Products in devices requiring extremely high reliability (such as medical equipment (Note 1), aircraft/spacecraft, nuclear power controllers, etc.) and whose malfunction or failure may cause loss of human life, bodily injury or serious damage to property ("Specific Applications"), please consult with the ROHM sales representative in advance. Unless otherwise agreed in writing by ROHM in advance, ROHM shall not be in any way responsible or liable for any damages, expenses or losses incurred by you or third parties arising from the use of any ROHM's Products for Specific Applications.

(Note1) Medical Equipment Classification of the Specific Applications

JAPAN	USA	EU	CHINA
CLASSⅢ	CLASSⅢ	CLASSⅡb	CLASSⅢ
CLASSⅣ		CLASSⅢ	

2. ROHM designs and manufactures its Products subject to strict quality control system. However, semiconductor products can fail or malfunction at a certain rate. Please be sure to implement, at your own responsibilities, adequate safety measures including but not limited to fail-safe design against the physical injury, damage to any property, which a failure or malfunction of our Products may cause. The following are examples of safety measures:
   [a] Installation of protection circuits or other protective devices to improve system safety
   [b] Installation of redundant circuits to reduce the impact of single or multiple circuit failure

3. Our Products are not designed under any special or extraordinary environments or conditions, as exemplified below. Accordingly, ROHM shall not be in any way responsible or liable for any damages, expenses or losses arising from the use of any ROHM's Products under any special or extraordinary environments or conditions. If you intend to use our Products under any special or extraordinary environments or conditions (as exemplified below), your independent verification and confirmation of product performance, reliability, etc, prior to use, must be necessary:
   [a] Use of our Products in any types of liquid, including water, oils, chemicals, and organic solvents
   [b] Use of our Products outdoors or in places where the Products are exposed to direct sunlight or dust
   [c] Use of our Products in places where the Products are exposed to sea wind or corrosive gases, including Cl_2, H_2S, NH_3, SO_2, and NO_2
   [d] Use of our Products in places where the Products are exposed to static electricity or electromagnetic waves
   [e] Use of our Products in proximity to heat-producing components, plastic cords, or other flammable items
   [f] Sealing or coating our Products with resin or other coating materials
   [g] Use of our Products without cleaning residue of flux (Exclude cases where no-clean type fluxes is used. However, recommend sufficiently about the residue.); or Washing our Products by using water or water-soluble cleaning agents for cleaning residue after soldering
   [h] Use of the Products in places subject to dew condensation

4. The Products are not subject to radiation-proof design.

5. Please verify and confirm characteristics of the final or mounted products in using the Products.

6. In particular, if a transient load (a large amount of load applied in a short period of time, such as pulse, is applied, confirmation of performance characteristics after on-board mounting is strongly recommended. Avoid applying power exceeding normal rated power; exceeding the power rating under steady-state loading condition may negatively affect product performance and reliability.

7. De-rate Power Dissipation depending on ambient temperature. When used in sealed area, confirm that it is the use in the range that does not exceed the maximum junction temperature.

8. Confirm that operation temperature is within the specified range described in the product specification.

9. ROHM shall not be in any way responsible or liable for failure induced under deviant condition from what is defined in this document.

Precaution for Mounting / Circuit board design

1. When a highly active halogenous (chlorine, bromine, etc.) flux is used, the residue of flux may negatively affect product performance and reliability.

2. In principle, the reflow soldering method must be used on a surface-mount products, the flow soldering method must be used on a through hole mount products. If the flow soldering method is preferred on a surface-mount products, please consult with the ROHM representative in advance.

For details, please refer to ROHM Mounting specification

© 2015 ROHM Co., Ltd. All rights reserved.

Precautions Regarding Application Examples and External Circuits

1. If change is made to the constant of an external circuit, please allow a sufficient margin considering variations of the characteristics of the Products and external components, including transient characteristics, as well as static characteristics.

2. You agree that application notes, reference designs, and associated data and information contained in this document are presented only as guidance for Products use. Therefore, in case you use such information, you are solely responsible for it and you must exercise your own independent verification and judgment in the use of such information contained in this document. ROHM shall not be in any way responsible or liable for any damages, expenses or losses incurred by you or third parties arising from the use of such information.

Precaution for Electrostatic

This Product is electrostatic sensitive product, which may be damaged due to electrostatic discharge. Please take proper caution in your manufacturing process and storage so that voltage exceeding the Products maximum rating will not be applied to Products. Please take special care under dry condition (e.g. Grounding of human body / equipment / solder iron, isolation from charged objects, setting of Ionizer, friction prevention and temperature / humidity control).

Precaution for Storage / Transportation

1. Product performance and soldered connections may deteriorate if the Products are stored in the places where:
   [a] the Products are exposed to sea winds or corrosive gases, including Cl_2, H_2S, NH_3, SO_2, and NO_2
   [b] the temperature or humidity exceeds those recommended by ROHM
   [c] the Products are exposed to direct sunshine or condensation
   [d] the Products are exposed to high Electrostatic

2. Even under ROHM recommended storage condition, solderability of products out of recommended storage time period may be degraded. It is strongly recommended to confirm solderability before using Products of which storage time is exceeding the recommended storage time period.

3. Store / transport cartons in the correct direction, which is indicated on a carton with a symbol. Otherwise bent leads may occur due to excessive stress applied when dropping of a carton.

4. Use Products within the specified time after opening a humidity barrier bag. Baking is required before using Products of which storage time is exceeding the recommended storage time period.

Precaution for Product Label

A two-dimensional barcode printed on ROHM Products label is for ROHM's internal use only.

Precaution for Disposition

When disposing Products please dispose them properly using an authorized industry waste company.

Precaution for Foreign Exchange and Foreign Trade act

Since concerned goods might be fallen under listed items of export control prescribed by Foreign exchange and Foreign trade act, please consult with ROHM in case of export.

Precaution Regarding Intellectual Property Rights

1. All information and data including but not limited to application example contained in this document is for reference only. ROHM does not warrant that foregoing information or data will not infringe any intellectual property rights or any other rights of any third party regarding such information or data.

2. ROHM shall not have any obligations where the claims, actions or demands arising from the combination of the Products with other articles such as components, circuits, systems or external equipment (including software).

3. No license, expressly or implied, is granted hereby under any intellectual property rights or other rights of ROHM or any third parties with respect to the Products or the information contained in this document. Provided, however, that ROHM will not assert its intellectual property rights or other rights against you or your customers to the extent necessary to manufacture or sell products containing the Products, subject to the terms and conditions herein.

Other Precaution

1. This document may not be reprinted or reproduced, in whole or in part, without prior written consent of ROHM.

2. The Products may not be disassembled, converted, modified, reproduced or otherwise changed without prior written consent of ROHM.

3. In no event shall you use in any way whatsoever the Products and the related technical information contained in the Products or this document for any military purposes, including but not limited to, the development of mass-destruction weapons.

4. The proper names of companies or products described in this document are trademarks or registered trademarks of ROHM, its affiliated companies or third parties.

© 2015 ROHM Co., Ltd. All rights reserved.

General Precaution

1. Before you use our Products, you are requested to carefully read this document and fully understand its contents. ROHM shall not be in any way responsible or liable for failure, malfunction or accident arising from the use of any ROHM's Products against warning, caution or note contained in this document.

2. All information contained in this document is current as of the issuing date and subject to change without any prior notice. Before purchasing or using ROHM's Products, please confirm the latest information with a ROHM sales representative.

3. The information contained in this document is provided on an "as is" basis and ROHM does not warrant that all information contained in this document is accurate and/or error-free. ROHM shall not be in any way responsible or liable for any damages, expenses or losses incurred by you or third parties resulting from inaccuracy or errors of or concerning such information.

© 2015 ROHM Co., Ltd. All rights reserved.